BOSTON PUBLIC LIBRARY
3 9999 06656 631 4

T223
.C246
1943
v.5, pt.3

No.

THE TRUSTEES OF THE
PUBLIC LIBRARY
OF THE CITY OF
BOSTON
1852 : 1878

Published May 25, 1943

Serial No. 296,723

337,847

ALIEN PROPERTY CUSTODIAN

SEALING MEANS FOR VALVE BAGS

Eberhard Holzapfel, Krefeld, Germany; vested in the Alien Property Custodian

Application filed September 27, 1939

The invention relates to a sealing means for valve bags of paper and similar material, such as are used for holding cement, lime, phosphate, and the like.

The main object of the invention is to provide means for sealing the valve of the filled bag in such way that it cannot be indiscernably opened and closed again by an unauthorized person.

Another object of the invention is the provision of simple and efficient means for sealing the valve of the bag without riveting and sticking nor using lead and adhesive.

Another object of the invention is to provide sealing means having no separate parts which might be lost before the bag is filled.

A further object of the invention is the provision of sealing means exclusively inside the bag, no parts extending from the valve to the outside which might be torn off when the filled bag is carried and conveyed.

Another object of the invention is to provide a bag of the above type which may be produced at a minimum cost and which may be filled, sealed, and opened again with the minimum expenditure of labor and time.

The invention consists of means for sealing a bag after being filled, said means consisting of a flexible member of inelastic material, said member being arranged in a valve channel of the bag and extending into the interior of the bag. The invention also consists in providing a paper enclosure for such inelastic material, and combining the so enclosed strip of metal or the like with the valve of a bag. The invention may be embodied in various forms of bag openings or valves, as will hereafter appear in connection with the embodiments disclosed.

The invention will be more fully described hereinafter in connection with the embodiments, such embodiments will be shown in the drawings, and the invention will be finally claimed hereafter.

In the accompanying drawings:

Figure 1 is a section through the valve corner of a bag having a crossed bottom and a valve in one corner of the latter;

Figure 2 shows another constructional example of a valve bag fitted on a filling nozzle;

Figure 3 shows a superior corner of a bag having a valve at each corner, the bag being shown during the withdrawal from the filling nozzle;

Figure 4 shows the inferior corner of the bag according to Figure 3;

Figure 5 shows the sealing of the upper valve of the bag illustrated in Figures 3 and 4 in another manner; and

Figure 6 is a plan view of Figure 1.

Similar characters of reference indicate corresponding parts throughout the various views.

In the drawings, the adhesive between the individual layers of paper is indicated in dotted lines. When considering the drawing, it is necessary to take into account the distortion from the actual form which is due to the fact that spaces are shown between the layers of paper lying one upon the other for purposes of greater clarity. The parts of the bag which are shown as simple layers of paper are in many cases formed of multiple layers, it being possible for the individual plies of one layer to consist of different types of paper and the like.

Referring to the drawings, and more particularly to Figure 1, the valve aperture (indicated by the arrow *y*) of the bag **4** is provided with a crossed bottom of the so called diamond bottom type by the formation of the turned-in corner part **1** and the overlapping of the flaps **2** and **3**, that it extends into the interior of the bag over the inner transverse edge of the turned-in corner part **1**. Above the turned-in corner part, a plate **5**, which consists of soft lead, a flexible but inelastic material, is connected by the rivet or rivets **6** to the crossed bottom formed by the flaps **2** and **3**.

In the embodiment shown in Figure 2, the bag destined to be filled is pushed on to the nozzle **7** which serves to fill the bag, and this has a sharp upper edge **8** at the forward end; the nozzle **7** being inserted until its collar **9** abuts against the bag **10** so that the bag hangs on the nozzle **7**. The bag **10** also has a crossed bottom formed by the flaps **11** and **12**. A tongue consisting of two paper sheets **13** and **14**, between which a soft lead strip **15** is disposed, is inserted in the valve aperture. The ends of the sheets **13** and **14** are suitably joined by adhesive **13***a*.

In the embodiment illustrated in Figures 3 and 4, a valve is provided at every corner. Thus the operator need not seek the corner of the bag which is to be fitted on the nozzle. Preferably, however, one of the valves of the superior bottom is to be used in filling the bag, the valves of the inferior bottom therefore being of a different construction. The superior diamond bottom formed by the flaps **17** and **18** as shown in Figure 3, has a sleeve **19** of paper fitted in the valve aperture, the outer sides of the said sleeve being stuck to the said diamond bottom lying above it and to the turned-in corner part situ-

ated below it, as shown in Figure 3. The nozzle 7 rests on the part 10*a* of the bag.

An inferior diamond bottom, as shown in Figure 4, is formed by the flaps 22 and 23. The nozzle 7 rests on the part 16*a* of the bag 16. A paper tube 24 consisting of two layers is fitted in the valve conduit. The turned-in corner part 16*a* of the bag 16 fits into this tube 24. Between the inner wall of the corner part 16*a*, and the wall 24*a* of the tube 24, a bent inelastic soft metal strip 25 is placed, held in position by pieces of paper 26 and 27.

The plate 5, the sheets 13 and 14, the sleeve 19 and the tube 24 are of equal width to the valve conduit when the latter is pressed flat and therefore cover the entire width of that part of the turned-in corner which is situated between the flaps of the crossed or diamond bottom. The metal parts 15, 20, and 25 are, on the other hand, considerably narrower than this part of the turned-in corner.

For filling, each of the bags mentioned before is fitted to the nozzle of a filling device regardless of its particular construction by introducing this nozzle into the valve aperture indicated by the arrow *y* in Figure 1. Figure 2 shows how one of the bags hangs on the nozzle 7 during the filling. During withdrawal from the nozzle 7 after filling has been completed, the bag is, as shown in Figure 3, forcibly bent downwards by a quick blow or pressure on the upper diamond bottom shortly before it completely leaves the nozzle so that this upper bottom is folded above the transverse line indicated by *x* in Figure 3. For this purpose, the filling nozzle 7 is advantageously provided on its upper side at the forward end with the projection 8. During this folding of the bottom, the metal insertion is also sharply bent over, through about 90° in the downward direction. Since it is constructed of inelastic material, it retains the bend imparted to it and remains lying transversely in front of the inner mouth of the valve conduit. When the plate 5 is so manipulated, it thus shuts off the conduit itself. When the narrow strips 15 and 20 are so manipulated, they carry round with them the paper sheets or paper sleeves connected thereto and hold them in the bent-over position, so that the valve conduit is closed in the inward direction by these sheets or sleeves. A particularly complete closure is effected when using a sleeve or sleeves 19, as shown in Figure 3.

If the bag is tilted over after it has been completely removed from the nozzle 7 by which it is carried during the filling, the charged material further bends over the metal plate or the metal strip 5 already bent over through about 90°, or the strip 15 together with the paper sheets 13 and 14, or the strip 20 with paper sleeve 19 secured thereto, until they bear against the turned-in corner part from below when thus bent completely through 180°.

The valve conduit then remains completely clean on the outside, because any material remaining therein during filling falls out immediately. This is particularly important in the case of hygroscopic material, because such material forms with the water absorbed from the air a solution or paste which attacks the paper the bag is formed of and may destroy the bag valve after a short time. Such destruction is not possible according to the invention, because neither adhesive moisture nor material remains in the outer part of the valve conduit.

For sealing the opposite valve of the superior crossed bottom, the operator passes his hand over the bottom, so as to press the valve conduit flat. He then folds the bottom of the bag, as shown in Figure 5, by clenching his hand and thus bending in the entire valve corner. The insertion and the lower valve lip thus are grasped reliably and bent over through practically 180° without difficulty. This bending-in can always be carried out, as the bag is never so tightly filled as to render it impossible.

The valves of the interior crossed bottom are not yet sealed during the withdrawal of the bag from the filling nozzle. They are closed by the filling material acting upon them by pressure, or may be sealed in the same manner as mentioned before by the operator bending-in the valve corner after the bag being turned so that the inferior bottom is directed upwards. If the bag is then turned again to its initial position, i. e., the inferior bottom again bearing the bag, the paper tubes 24 and the metal strips 25 are automatically bent to the position shown in Figure 4.

The invention has the advantage that no special manipulation is required for closing the valve during filling, if care is taken that the valve sliding or falling off the filling nozzle 7 is properly tilted over.

Instead of making the strips 5, 15, 20 and 25 of soft lead, they may consist of other metal or other material, the elasticity of which is so small that the folding-in of the bottom of the bag during the removal of the filled bag from the filling nozzle 7 produces a permanent bend because the elastic limit is exceeded, while on the other hand, the strength must be so great that it is capable of overcoming the elastic action of the folded-over paper sheets or paper sleeves. This is facilitated by the fact that the plate of metal or other inelastic material is of considerably greater dimensions than the paper. At the most, two layers of paper have to be bent over, since the sleeves 19 preferably comprise only one layer, and the tubes 24 two layers, at least in their part projecting freely into the interior of the bag.

In all the constructional examples described in the foregoing, the metal insertion itself is not secured by adhesive to the paper layers connected thereto, but is disposed between the paper layers or under auxiliary paper sheets 26 and 27, because the adhesives generally employed for purposes of economy, such as water glass, glue and the like, do not adhere to metal with sufficient reliability. However, if bitumen or similar adhesive is employed, or if the insertions themselves consist of another material which sticks readily, instead of metal, sticking may be effected directly between the paper of the wall of the bag or of the closing part, of the sheet or of the sleeve, and the insertion.

In the same way as such bags are frequently constructed of water-tight and vapor-tight material, for example with insertions of metal foil, asphalt paper, cellulose glass and the like, the sheets sealing the valve may also consist of such material, whereby a complete water-tight or vapor-tight bag is produced.

EBERHARD HOLZAPFEL.

PUBLISHED

MAY 25, 1943.

BY A. P. C.

E. HOLZAPFEL

SEALING MEANS FOR VALVE BAGS

Filed Sept. 27, 1939

Serial No.
296,723

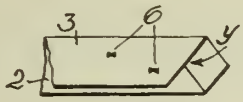

Fig. 6

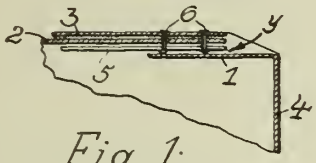

Fig. 1

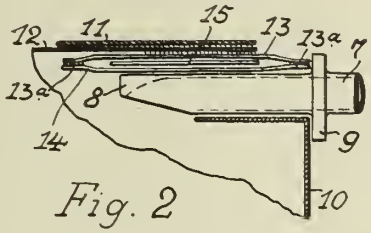

Fig. 2

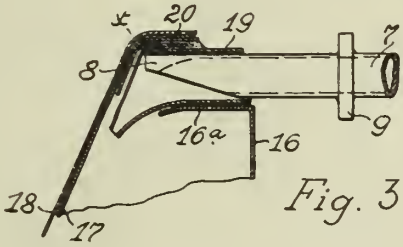

Fig. 3

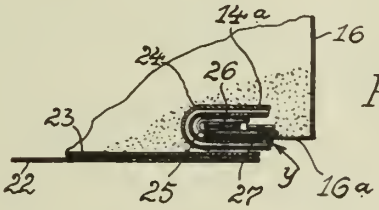

Fig. 4

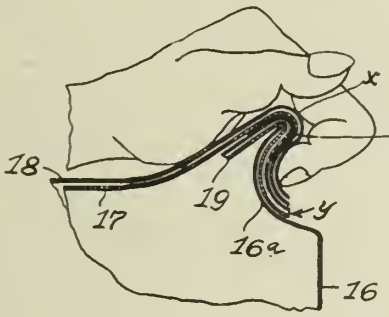

Fig. 5

INVENTOR
Eberhard Holzapfel
By C. P. Goepel
his ATTORNEY

Digitized by the Internet Archive
in 2014

https://archive.org/details/uspatentapplicat53unit

Published May 25, 1943

Serial No. 296,851

ALIEN PROPERTY CUSTODIAN

SHOCK ABSORBER FOR AIRCRAFT CHASSIS

Eduard Tönnies, Frankfurt, Germany; vested in the Alien Property Custodian

Application filed September 27, 1939

This invention relates to telescopic shock absorbers of the type generally used in vehicles. Particularly, it relates to a grease-damped shock absorber having particular utility in aircraft chassis.

The new device comprises a development from the telescopic shock absorbers used in aircraft construction wherein use is made of steel springs or compressed air for absorbing shocks, and in which a liquid, usually oil, is used to damp the relative movement of the telescoping parts. Usually, damping is achieved by forcing the liquid from one compartment to another through throttle openings, thus to absorb a substantial portion of the impact energy.

An object of this invention is to provide a shock absorber which utilizes a viscous non-drop damping medium, such as, grease, which does not require elaborate and expensive packing between the relative moving parts, as usually is required in oil damped shock absorbers.

Another object of the invention is to prevent leakage and losses through the packings and to provide a shock absorber wherein relatively coarse packing may be used.

A further objective is to provide a shock absorber capable of utilizing any one of the many special greases now used for lubricating bearings and the like, the viscosity of which remains substantially constant throughout the entire range of working temperatures.

The use of grease as a damping agent, however, is not without attendant difficulties not found where oil or other similar fluids are used. After one shock causes telescoping action between the working parts of an oil damped shock absorber, the oil, being liquid, rapidly flows back into the chamber from which it was first forced, so that it is immediately available for absorbing a next, rapidly following shock.

When shock absorbers are built into the retractible landing gear of an airplane, they generally assume a horizontal position when the gear is retracted, and a vertical position when the gear is extended prior to landing. If oil is used as a damping medium, there is always sufficient time for it to flow into a position of readiness as the gear is extended without positive displacement or control means. It is an object of this invention to provide positive displacement and control of the grease therein and to take advantage of the inherent sluggishness of grease, which would be fatally defective if substituted for oil in the shock absorbers heretofore known.

Ready understanding of the invention may be had from the following specification and drawings, in which:

Fig. 1 is a cross section of one embodiment of the invention; and

Fig. 2 is a view similar to Fig. 1, but showing a second embodiment.

Fig. 1 shows a telescopic shock absorber according to the invention, comprising a cylinder member **2** having an eyelet **4** by which it may be anchored to the landing gear of an airplane in the usual manner.

Hollow piston member **6**, which also has an anchoring eyelet **8** at its outer end, is slidable axially in cylinder **2** in accordance with the relative movement of the respective parts of the landing gear between which the shock absorber is anchored.

A grease compartment, indicated by the bracket **10**, is formed between the inner wall of cylinder **2** and the outer wall of piston **6**, and is delimited by flanges **12** and **14** on piston **6**, which are packed as shown at **16** and **18**.

Grease compartment **10** is divided into two sections **20** and **22** by flange **24** extending inwardly from the inner wall of cylinder **2**, which acts as a baffle. A plurality of bleeder passages **26** extend through flange **24** to connect the sections **20** and **22** of the grease compartment. Check valves **28** are provided in some of the bleeder passages so that grease will flow more readily from section **20** to section **22** than it will from section **22** back into section **20**.

A coil spring **30** is engaged between the end of cylinder **4** and the end of piston **6** to absorb the initial impact of shocks. The assembly is completed by the valve **32** for injecting grease **34** into the grease chamber.

It should be noted that the total capacity of the chamber **10** is always the same, regardless of the position of piston **6** in the cylinder. The contrast in damping is effected through the check valves **28** on one side of some of the bleeder passages **26**. When piston **6** telescopes into cylinder **2**, resistance to movement is provided by the compression of spring **30**, and some damping is effected by transit of the grease through bleeder passages **26**, all of which are substantially open.

The shock of sudden return of the parts to the position shown in Fig. 1 is prevented by check valves **28** which close some of the bleeder passages **26**. Spring **30** provides positive return of the piston to a position of readiness for the next ensuing shock.

Since the grease compartment **10** formed of

sections 20 and 22 is always of uniform size, substantially uniform damping movement of the piston 6 into cylinder 2, regardless of the initial relative positions always occurs. Uniformity of damping prevails in the return movements of the piston and cylinder, so that rapid succession of impacts can neither build up nor deplete the damping effects of the mechanism.

In Fig. 2 a second embodiment of the invention is shown. As in Fig. 1, the device includes a cylinder member 102 having an anchoring eyelet 104 and a piston 106 also having an eyelet 108. Grease chamber 110 is delimited by flanges 112 and 114 which extend inwardly from the cylinder 102 and carry packing 116 and 118, respectively, in packing grooves.

Grease chamber 110 is divided into two sections 120 and 122 by flange 124, which is carried by piston 106. Flange 124 is provided with packing 125 in a packing groove, and throttle openings 128 connect sections 120 and 122 of grease chamber 110.

As in Fig. 1, a valve member is provided in the wall of cylinder 102 for injecting grease 134 into the grease chamber. However, in the device of Fig. 2 the shock of impact is absorbed by air compressed in chamber 136.

Movement of the piston-carried flange 124, which corresponds to the baffle 24 of Fig. 1, in the grease chamber provides damping, which may be increased by decreasing the size of throttle openings 128. It is to be understood that some or all of throttle openings 128 may be provided with check valves so that less damping is effected by movement of the piston 106 in an air compressing direction into chamber 136, at which time the valves are open, than in return movement of the piston from the chamber when the valves are closed.

EDUARD TÖNNIES.

PUBLISHED

MAY 25, 1943.

BY A. P. C.

E. TÖNNIES

SHOCK ABSORBER FOR AIRCRAFT CHASSIS

Filed Sept. 27, 1939

Serial No. 296,851

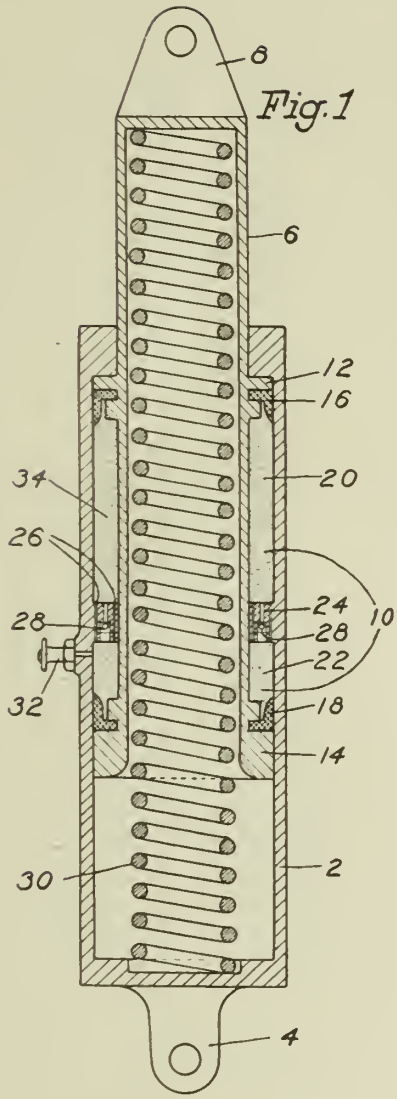

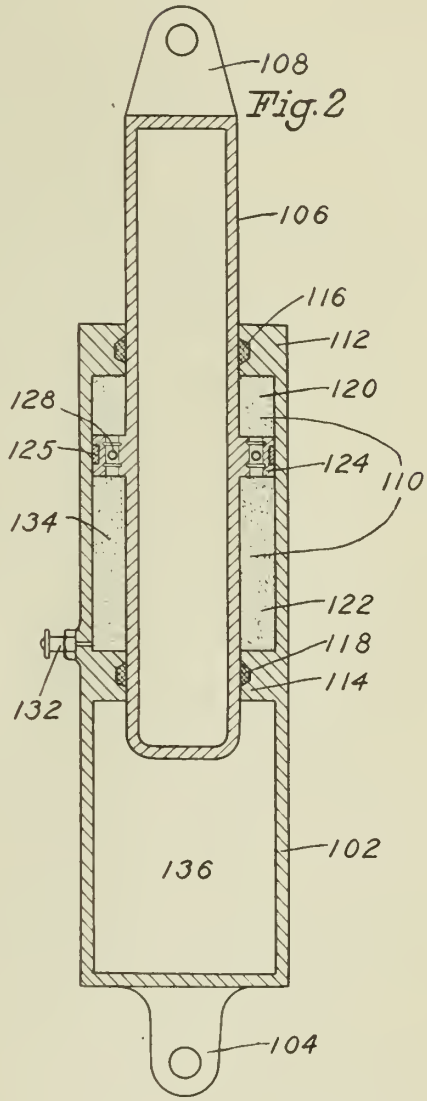

Inventor

Eduard Tonnies

Bailey & Larson

Attorney

Published May 25, 1943 Serial No. 299,877

ALIEN PROPERTY CUSTODIAN

WINCH PROVIDED WITH AN AUTOMATIC RELEASE AT THE END OF THE LIFTING OPERATION

Roland Laraque, Paris, France; vested in the Alien Property Custodian

Application filed October 17, 1939

The present invention has for its object a winch provided with automatic release at the end of the lifting operation which is applicable to the retraction of aeroplane undercarriages for example.

The various features of said invention will be made apparent in the ensuing description and with reference to the accompanying drawing wherein:

Fig. 1 shows the winch in transverse section;

Fig. 2 shows a section along the line 2—2 passing through two different planes of Fig. 1;

Fig. 3 shows a section along the line 3—3 of Fig. 2;

Figs. 4 and 5 are two fragmentary views showing the operation of the control device.

In one embodiment of the object of the invention, which is given simply by way of example, the winch is formed in the following manner.

On a shaft 1 (Fig. 1) which is driven by an electric or other motor through a cardan joint 2, is fixed a first clutch plate 3 with which a second plate 4 is adapted to come into contact.

This plate is provided with a stem 5 which is terminated by a collar 6 and which slides in a hollow shaft 7 provided with a worm 8. Said worm drives in a reversible manner a helical gear 9 fixed at 10 (Fig. 2) on a shaft 11 which carries the drum 12 of the winch. On said shaft 11 is also fixed at 10 a ratchet wheel 13, the teeth of which are adapted to receive a pawl 14 which is controlled as follows.

Said pawl is preferably formed by a roller carried by a fork 15 which swings about a pin 16 on a crank 17. Said crank is fixed on a shaft 18 actuated by an operating lever 19 which may be directly controlled by hand by means of any suitable remote transmission device.

The crank 17 is provided with a nose 20 on which is hooked a spring 21 acting on the fork 15, the stay 22 of which abuts against the crank so as to limit the return travel of the pawl and increase the resistance of same to the thrust of the teeth of the ratchet after the load has been lifted.

On the shaft 18 are provided two arms 23 (Fig. 2) which, by means of projections 24, can act on a hollow pusher 25 and make it slide in bearings 26 (Fig. 1) of the case 27 which houses the whole mechanism. Said pusher is retracted to a rear position by a spring 28.

In the pusher can slide a catch 29 provided with a slot 30 into which can be inserted the bolt 31 of a lock 32 which passes through the pusher perpendicular to its axis.

The catch 29 is in contact, at one of its ends, with a spacing-bar 33 provided with a collar 34 against which bears a spring 35 that bears, at its other end, against the collar 6 of the stem of the clutch plate 4. A spring 36, which bears against the other face of said collar 6, is kept inside the hollow shaft 7 by a nut 37 screwed in the latter and exerts an opposing action to the spring 35, but weaker than that of the spring 35.

The length of the spring 35 is such that its action on the stem 5 is nil or almost nil when the catch 29 is at the end of its rearward travel. The spring 35 then predominates and acts on the stem 5 to separate the plate 4 from the plate 3.

Now, the position of the catch 29 depends on the relative positions of the pusher 25 and of the lock 32.

The latter terminates in a jaw 38 in which a fork 39 can act on it through a pin 40. Said fork is secured to a shaft 41 that a spring 42 tends to rotate to lift the lock 32. On said shaft is fixed a lever 43, at the end of which is pivoted, by means of a jaw 44, a lever 45 (Fig. 3) of which the end is provided with a projection 46. Said projection engages in a spiral groove 47 provided in a plate 48 secured to the gear 9.

In the embodiment shown and considered preferable, the projection 46 is double and engages, on either side of the lever 45, in two spiral grooves 47 which are opposite each other and are formed in two identical plates 48.

Said plates are secured to the gear 9 by screws 49 which enable the plates to be given a suitable direction relatively to the gear.

In each groove 47 can be fixed an adjustably positioned abutment 50 against which the projection 46 is adapted to abut after having travelled in the groove a distance which depends on a predetermined number of revolutions effected by the plates 48 with the gear 9 and the drum 12.

The operation of the apparatus is as follows:

When the winch is inoperative, it is released and the load is at its low point. The mechanism is then placed in the position shown in Fig. 1. The lock 32 is lifted and secures the catch 29 to the pusher 25 which is in its extreme rearward position under the action of its spring 28. The plates 3 and 4 are kept apart by the spring 36.

The operating lever 19 is placed in the position I and the pawl 14 is raised. As regards the projection 46 of the lever 45, it is in its extreme position in the grooves 47 towards the centre of the plates 48.

As soon as the operating lever 19 is acted on and brought into the raising position II, (Fig. 4),

the arms 23 (Fig. 2) actuate the pusher 25 and compress the spring 28. The pusher is in this case accompanied by the catch 29 which is secured thereto by the bolt 31 of the lock 32. The catch then acts on the spacing bar 33 which compresses the spring 35 which in turn overcomes the resistance of the spring 36 and brings the plate 4 into contact with the plate 3 that is actuated by the motor.

The clutch is thus engaged and the worm 8 drives the drum 12 by means of the gear 9 and of the shaft 11.

While the load is being raised, the plates 43 rotate with the gear 9 and the projection 46 follows the grooves 47 of these latter until it abuts against the abutment 50. This instant must correspond to that at which the load occupies its highest position and this coincidence is obtained by suitably positioning the abutment 50.

When said abutment comes into contact with the projection 46, the plates continue to rotate and thus move said projection along a certain length of an arc. By so doing, they act on the lever 45 which causes the lever 43 to pivot with its shaft 41. The fork 39 is then lowered with the lock 32, the bolt 31 of which leaves the slot 30 of the catch 29. From this instant onwards, the spring 35 can push back the spacing bar 33 which returns the catch to its inoperative position.

The spring 35 is then relaxed and the spring 36 acts on the stem 5 of the plate 4 and separates same from the plate 3. The winch is thus released and its various elements occupy the positions shown in Fig. 5.

During its operation, the ratchet 13 was rotating in the direction of the arrow *f*, and lifted with each of its teeth the pawl 14. As soon as the winch is released, the load exerts its pull on the drum and rotates the ratchet 13 in the direction of the arrow *f'* so that one of the teeth abuts against the pawl, the stay 22 of which is resting on the crank 17. Any rotation of the drum in this direction is thus made impossible and the load is locked at its highest point.

In order to lower the load, the operating lever 19 is brought into the position I. The pusher 25 is then brought backwards and the pawl 14 is lifted as in Fig. 1. The ratchet is released and the load can then move downwards, rotating the drum 13.

In order to reduce the downward speed to a suitable value, the shaft 11 is provided with a governor formed by a piston 51 that moves in a cylinder 52 along a screw 53 driven by said shaft.

The cylinder is filled with oil and the piston 51 is provided with openings 54. Flap valves 55 are furthermore arranged in said piston.

When the shaft 11 is driven by the motor, the oil can pass through the piston by way of the openings 54 and the valves 55 and thus offers no resistance to the forward movement of the piston along the screw 53.

On the contrary, when the shaft 11 is driven by the load, the oil only pass through the openings 54 and offers a fairly large resistance to the movement of the piston which thus brakes the rotation of the screw 53.

This speed damper may moreover be replaced by any similar device and the apparatus described above may be subjected to any modifications of shape and of detail without for that reason departing from the spirit of the invention.

It is obvious that this winch may be used for manipulating any load and in particular whenever the lowering of such load is to be ensured in any case.

ROLAND LARAQUE.

PUBLISHED

MAY 25, 1943.

BY A. P. C.

R. LARAQUE

WINCH PROVIDED WITH AN AUTOMATIC RELEASE AT THE END OF THE LIFTING OPERATION

Filed Oct. 17, 1939

Serial No. 299,877

3 Sheets-Sheet 1

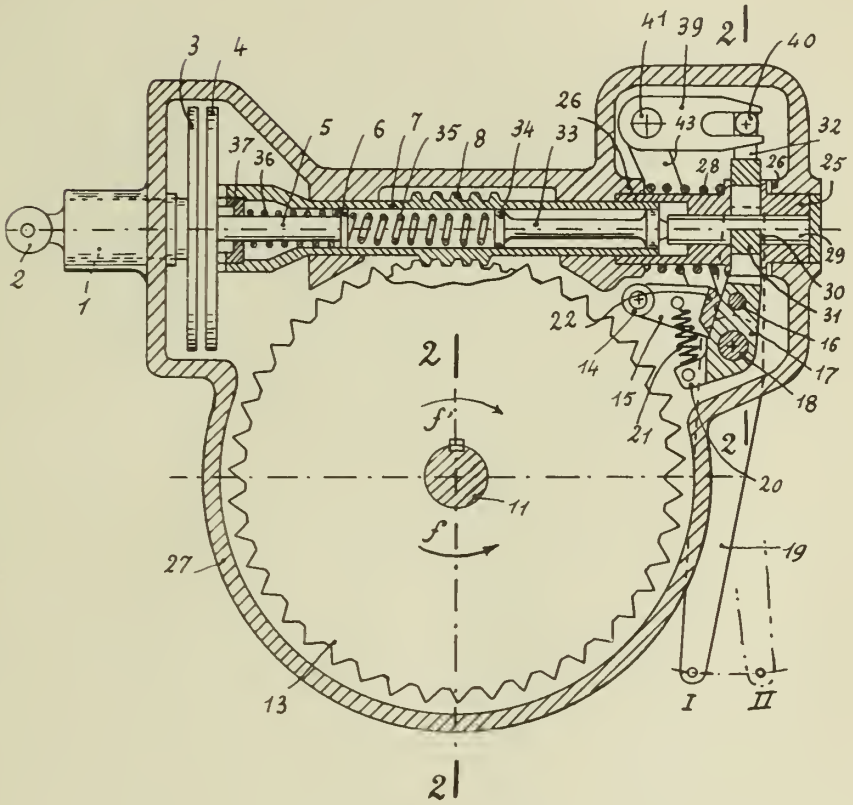

Fig. 1

Inventor:
R. Laraque
By E. F. Wenderoth
Atty

PUBLISHED

MAY 25, 1943.

BY A. P. C.

R. LARAQUE

WINCH PROVIDED WITH AN AUTOMATIC RELEASE AT THE END OF THE LIFTING OPERATION

Filed Oct. 17, 1939

Serial No. 299,877

3 Sheets-Sheet 2

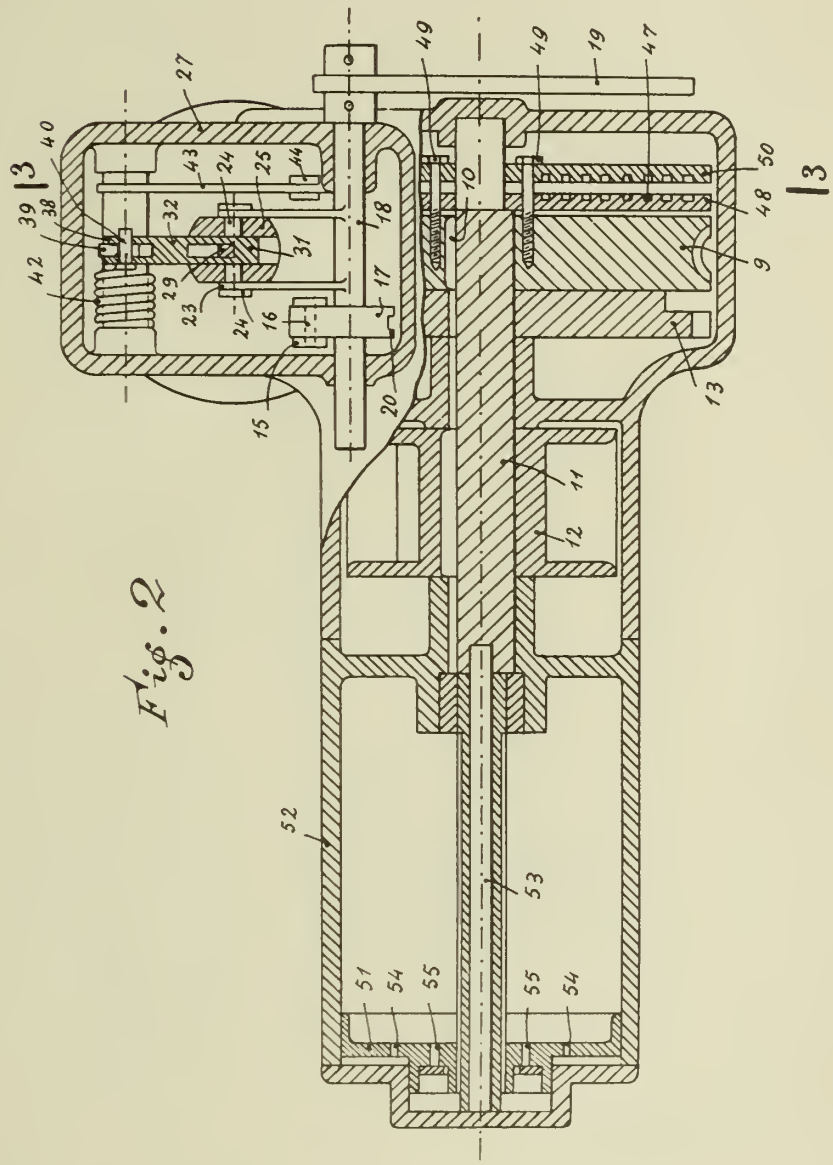

Fig. 2

Inventor:
R. Laraque
By E. F. Wenderoth
Atty

PUBLISHED

MAY 25, 1943.

BY A. P. C.

R. LARAQUE

WINCH PROVIDED WITH AN AUTOMATIC RELEASE AT THE END OF THE LIFTING OPERATION

Filed Oct. 17, 1939

Serial No. 299,877

3 Sheets-Sheet 3

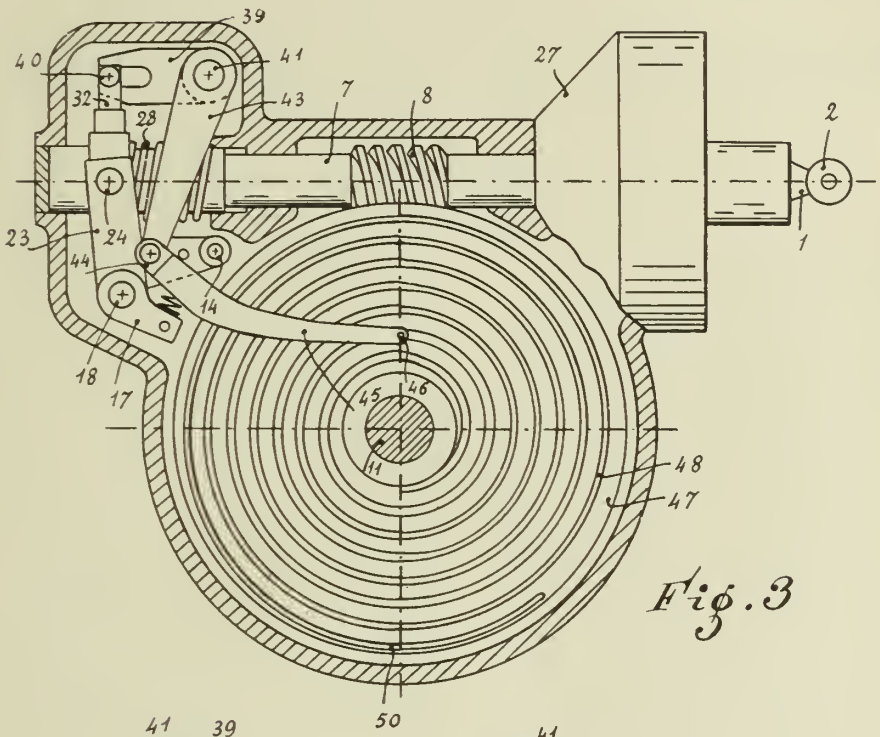

Fig. 3

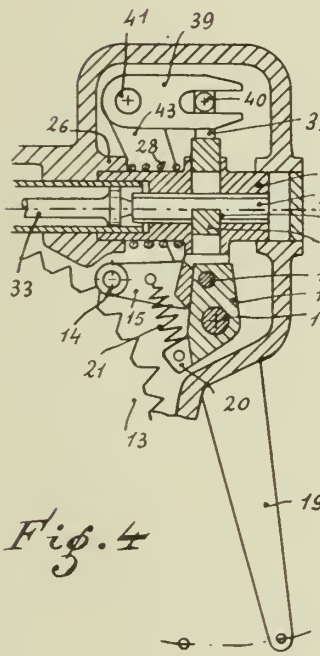

Fig. 4

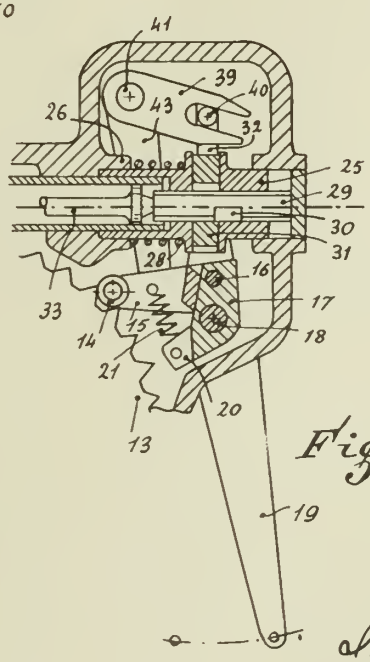

Fig. 5

Inventor:
R. Laraque
By E. F. Wenderoth
Atty

Published May 25, 1943

Serial No. 300,820

ALIEN PROPERTY CUSTODIAN

HEAT EXCHANGE DEVICES

Stefan Beck, Budapest, Hungary; vested in the Alien Property Custodian

Application filed October 23, 1939

The invention relates to an improvement of heat exchange devices in which the heat exchange surfaces in contact with the external medium, e. g. air, to be heated or cooled, are constituted by thin, plate-like apertured bodies through which the external medium flows in transverse or perpendicular direction. By means of such heat exchangers it is possible to obtain a high coefficient of heat transfer with greatly diminished weight of the apparatus. The heat exchanger structures in question may, for instance, consist of a thin perforated plate or of groups of different direction of fine strip-shaped elements or wires, e. g. of a wire mesh and their dimension measured in the direction of the flow of the external medium, e. g. air, is very small. The external medium flowing through such a heat exchange device leaves the surface already after a short contact; on each part of the surface there impinges fresh air which has not been in contact with the surface previously. In consequence hereof, the utilizable difference of temperature between the surface and the medium is increased and therefore the heat transfer becomes more favorable. In the case of earlier heat exchangers, in which the external medium was forced to stream along the heat exchange surfaces along a path of greater length, a heat-insulating layer (Prandtl's boundary layer), adhering to the surface, the thickness of which layer increases in proportion to the length of the surface, was formed along the heat exchange surfaces; as against this, in the apertured heat exchange surfaces possessing, as mentioned, only a very slight dimension in the direction of flow of the external medium, it is impossible for such a thick heat-insulating layer to be formed, by which fact the coefficient of heat transfer is still further increased.

In practice there frequently arises the task to arrange heat exchange surfaces in the interior of a duct intended to intensify the flow of the external medium through the heat exchanger, or it may be desired to arrange the heat exchange surface so as to form the external boundary wall of a box possessing an effect similar to that of the duct referred to. In connection herewith, in the case of ducts or boxes of given dimensions, there arises the difficulty that a heat exchange surface capable of a given amount of heat transfer cannot be accommodated in the space available. One would therefore be compelled to arrange a number of heat exchange surfaces one behind the other in the direction of flow, which arrangement, however, would result in the disadvantage that the external medium would have to overcome an amount of flow resistance increased in accordance with the number of heat exchange plates and that it might possibly assume an undesirably high temperature. According to the invention these difficulties are eliminated by arranging the heat exchange plates in the form of a structure the cross-section of which corresponds to a broken or curved, e. g. to a zig-zag-shaped or undulating line. Particularly, the arrangement according to the invention may be such that all heat exchange surfaces are situated in parallel to the centre lines of the conduits (e. g. steam or hot-water pipes) serving for the distribution of the external medium. In other words, the apparatus according to the invention is characterized by a heat exchange structure the section of which perpendicular to the conduits referred to is shaped according to a broken or curved line.

The apparatus according to the invention will, in addition to the advantages of a very favorable heat exchange and of the shortening of the length of the collecting pipes by which the distributing pipes are mutually connected, also offer the advantages of very small space requirements and of the substantial diminution of the flow resistance of the external medium, notably when compared to a simple heat exchange surface arranged at right angles to the direction of flow of the external medium, as well as when compared to a plurality of flat heat exchange surfaces arranged one behind the other in the direction of flow.

Heat exchange devices have indeed already become known which comprise heat exchange plates arranged in zig-zag shape between the conduits serving for the circulation of the external medium, but the heat exchange plates of these devices were solid plates not presenting any apertures, the external medium flowing along these solid plates, such flow being burdened with the great disadvantage mentioned above of the increase of the thickness of the said Prantdl's insulating boundary layer. Whilst these devices enabled the single advantage of the diminution of space requirements to be obtained, it was of course not possible, in view of the disadvantageous kind of flow just mentioned, to obtain by their aid any diminution at all of the resistance to flow.

A device comprising heat exchange surfaces arranged in a zig-zag shape between the conduits of the internal medium, and fitted with apertures, have also already been proposed, but in the case of this arrangement the heat ex-

change surfaces were arranged in planes situated transversely to the centre line of the conduits in such a manner that it was not in a plane perpendicular to the centre line of these conduits but in a section plane parallel to them that the structure possessed a zig-zag-shaped cross section. In the case of this arrangement conduits possessing a flat cross section and an external surface of very great width had necessarily to be employed, in order to enable the heat exchange surfaces to be joined in a heat conducting manner to the conduits. As against this the apparatus according to the invention enable inexpensive types of any desired small cross section to be employed.

In the drawings some embodiments of the heat exchange device according to the invention are shown by way of example.

Fig. 1 is a part front elevation and

Fig. 2 a vertical section of one embodiment.

Fig. 3 shows a cross section of the same along a horizontal plane situated between the collecting pipes.

Fig. 4 illustrates the upper collecting pipe and a part of the heat exchange surfaces of this embodiment in perspective view.

Further embodiments are shown in diagrammatical part sections in Figs. 5 to 9.

In Figs. 1 to 4 1 designates the distributing pipes for the internal medium, e. g. hot water, 2 the upper and lower collecting pipes, by which the distributing pipes are united and 3 the apertured heat exchange surfaces. Between the apertured panels solid strips 4 are left in order to ensure a higher degree of mechanical strength.

It appears clearly from Figs. 3 and 4 that the cross section situated at right angles to the pipes 1 is arranged according to a broken, in the example illustrated zig-zag shaped line; the same effect can also be obtained if the cross section of the heat exchange surface is shaped so as to represent a wave line. This heat exchange structure is fixed on the distributing pipes 1 so as to ensure metallic, i. e. heat conducting contact, for instance by means of soldering or welding, in such a way that each second peak part, e. g. each wave crest of the structure is connected to a distributing pipe, or the heat exchange surface may also be made integral with the distributing pipes. Broken or curved lines of any desired kind may be employed for shaping the device, and it is also possible for certain parts of the same projecting into the space between the distributing pipes, e. g. on different sides of the axis plane of the distributing pipes 1. The arrangement shown in Fig. 3 according to which all parts of the heat exchange surface come to be situated on one side of the axis plane of the distributing pipes 1 possesses the advantage of more simple assembly and of the greater facility of cleaning the apparatus.

It is evident, however, that particularly in the case of devices of greater output capacity and in cases in which the possibility of accommodating the device within a relatively small volume of space is desirable in a higher degree still, it will be possible in connection with the zig-zag or wave shaped arrangement according to the invention to arrange the distributing pipes, which may in the given case also be required in higher number, in such a manner, that for instance, two or more distributing pipes are coordinated to each wave of the heat exchange surface; in this case a plurality of collecting pipes can be provided.

In the case of the embodiment according to Figs. 1–4 the solid strips 4 left between the aperture panels and serving for the fixing of the heat exchange surfaces are joining on to such parts of the external surface of the distributing pipes 1, the tangential plane of which is, as appears from Fig. 3, parallel to the axis plane of the distributing pipes 1; this method of fixing may in certain cases give rise to an undesirable resistance against the flow of the external medium and possibly also to the formation of eddies. In order to avoid this, the solid strips 4 of the various parts of the heat exchange services 3 are in accordance with Fig. 5 fixed on such places of the external surface of the distributing pipes 1, on which the tangential planes of the external surface (in the example represented also the strips 4 themselves) are situated at right angles to the axis plane of the distributing pipes 1.

The embodiment according to Fig. 6 differs from the embodiment according to Fig. 5 in that the cross section of the distributing pipes is flattened in a direction perpendicular to the plane of the solid strip 4. This results in the advantage that it is along a greater surface area that the fixing strips 4 are in contact with the external surface of the distributing pipes 1*a*, which appears to be more advantageous from the point of view of mechanical strength and on the other hand also from the point of view of heat transfer from the distributing pipes to the heat exchange plates.

As already mentioned above the various parts of the heat exchange plate may also be arranged on different sides of the axis plane of the distributing pipes 1. Such an embodiment is shown in Fig. 7, the mutually adjacent heat exchange plate parts 3*a* being arranged in such an inclined position relatively to each other as to cause ducts of e. g. hexagonal cross section to be formed between them through which part currents x_1—x_1 and x_2—x_2 of the external medium are flowing in such a manner as to cross the aperture plate parts twice and thereby being heated to a higher temperature. Accordingly this embodiment can be employed advantageously in such cases, when e. g. the air of a room has to be heated to a higher temperature. It is not indispensable that the edges 5 of the plate parts inclined relatively to each other should be in mutual contact or soldered to each other, it being in fact also possible to leave clearances 6 between them for reasons of easier manufacture; in this case, however, these clearances should be made of such narrow width only as to ensure that the width of the clearances only amounts to a small fraction of the mutual distance of the distributing pipes, in order to ensure that it should not be possible for the external medium to flow through in any appreciable extent between the edges of the apertured plate parts, and that accordingly it is substantially only through the apertures of the plate parts that the external medium should flow.

From the embodiment according to Fig. 6 it is possible to arrive at an advantageous further embodiment as shown in Fig. 8, by making the heat exchange plate parts 3 entirely or partly integral with the walls of the distributing pipes 1*b*. This arrangement will automatically eliminate in advance the method of fixing mentioned above according to Fig. 3 which method of fixing

may possibly be undesirable in a given case. In addition hereto the cross section of the distributing pipes *1b* is according to Fig. 8 made drop-shaped, i. e. of streamlined shape, which circumstance will for reasons per se known represent an advantageous shape as regards the flow of the external medium along the external surfaces of the distributing pipes. In order to effect tight closing off of the distributing pipes *1b* solder strips are employed along the lines 7.

The embodiment according to Fig. 9 results from a combination of the embodiments according to Figs. 7 and 8. According to this embodiment the apparatus will on the one hand become suitable for a higher heating output, owing to the fact that the various part currents x_1-x_1 and x_2-x_2 of the external medium already mentioned in connection with Fig. 7 are crossed twice by the apertured plate parts *3a*, *3b*, whilst on the other hand the plate parts *3a*, *3b* following each other in the direction of flow of the external medium, are integral with each other and each of them is integral with one half of the distributing pipes *1a*. For the purpose of tightly closing off the pipes *1c* solder strips are employed in this case also along the lines 7. It is evident, however, that in case a substantial heating or cooling of the external medium is desirable, it is also possible to employ the heat exchange devices according to Figs. 7 and 9 in multiple succession one behind the other in the direction of flow of the external medium.

STEFAN BECK.

PUBLISHED

MAY 25, 1943.

BY A. P. C.

S. BECK

HEAT EXCHANGE DEVICES

Filed Oct. 23, 1939

Serial No.
300,820

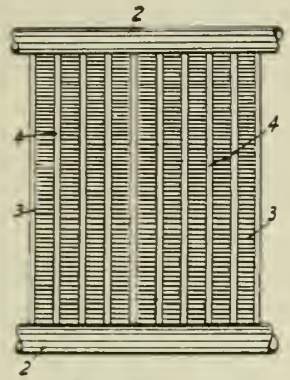

Fig. 1.

Fig. 2.

Fig. 3.

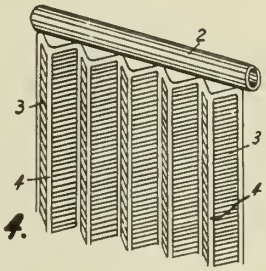

Fig. 4.

Fig. 5.

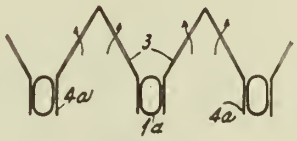

Fig. 6.

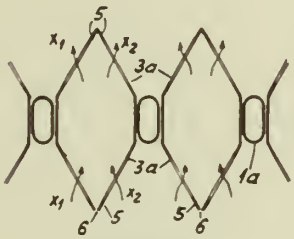

Fig. 7.

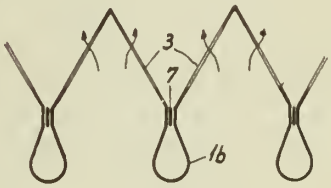

Fig. 8.

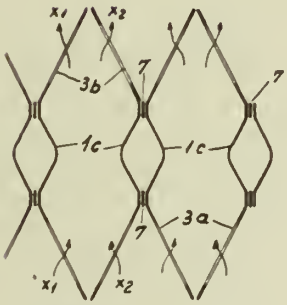

Fig. 9.

INVENTOR:
STEFAN BECK
BY Haseltine, Lake & Co.
ATTORNEYS

Published May 25, 1943

Serial No. 301,289

ALIEN PROPERTY CUSTODIAN

CONTROLLING MECHANISM FOR ACCOUNTING MACHINES

August Friedrich Pott, Zella-Mehlis, Germany; vested in the Alien Property Custodian

Application filed October 25, 1939

This invention relates to a controlling mechanism for accounting machines which is especially suitable for, but not limited to, adding machines equipped with a printing mechanism for settling accounts.

Controlling mechanisms for such machines have already become known but were all more or less complicated.

This drawback is eliminated according to the invention by arranging the controlling mechanism to be operated automatically in dependence of the species of calculation and of a tens-shift member allotted to the highest place, when the capacity of the totalizer is overstepped. This operation is performed in such manner that the controlling mechanism locks the keys and releases the drive of the machine for another cycle for introducing the fugitive 1 and for preparing the control for total or subtotal taking, with corresponding printing of symbols, for a negative value which is in positive form, or for a positive value.

In the drawings a control embodying the invention is illustrated by way of example.

In the drawings

Fig. 1 is an elevation of the control in its initial position, viewed from the left of the machine it is adapted to.

Fig. 2 is a detail view, showing certain parts of the control as illustrated in Fig. 1 in the position, they occupy during the tens transfer of the highest place of the totalizer.

Fig. 3 is a detail view showing the parts of the control as illustrated in Fig. 2 in the position they occupy after the introduction of the fugitive 1.

Fig. 4 is an elevation, viewed from the right and showing the means for locking the operation keys of the machine in their initial position.

Fig. 5 shows the position the parts occupy upon depression of an operation key.

Fig. 6 shows the position the parts occupy when the driving shaft of the machine has returned into its initial position after a partial rotation through 90 degs.

Fig. 7 is a perspective illustration viewed from the left and the front of the machine and showing the means for locking the number and operation keys of the machine, some parts being shown at a distance from each other for the sake of clearness.

Fig. 8 is an elevation, viewed from the right, of the mechanism for introducing the fugitive 1, in its initial position.

Fig. 9 is a perspective illustration, viewed from the right and the front of the machine, of the parts shown in Fig. 8, some parts being shown at a distance from each other for the sake of clearness.

Figs. 10 and 11 are elevations which are similar to Fig. 8 and show, respectively, the position the parts occupy when the driving shaft of the machine has returned into its initial position after a partial rotation through 90 degs., and at the close of the introduction of the fugitive 1.

Fig. 12 is an elevation, drawn to a larger scale and viewed from the right, showing the totalizer and the mechanism which is operatively connected thereto, the initial position.

Fig. 13 is a perspective detail illustration of certain parts as illustrated in Fig. 12, viewed from the right and the front of the machine, some parts being shown at a distance from each other for the sake of clearness.

Fig. 14 is an elevation which is similar to Fig. 12 but shows the parts in the positions they occupy upon completion of the tens transfer in the highest place of the totalizer when its capacity has been overstepped in the negative direction.

Fig. 15 is another perspective detail illustration, viewed as in Fig. 13 and showing other parts from Fig. 12, some parts being shown at a distance from each other for the sake of clearness.

Fig. 16 is an elevation which is similar to Fig. 12 but shows the parts in the positions they occupy after the fugitive 1 has been introduced negatively.

Fig. 17 is a perspective illustration, viewed from the right and the front of the machine and showing a shutter for closing an inspection opening in the top plate of the machine.

Figs. 18, 19, and 20 are other elevations which are similar to Fig. 12 but show, respectively, the positions of the parts when the driving shaft—which has performed a second partial rotation through 90 degs. upon negative overstepping of the totalizer capacity—has returned into its initial position, when the tens transfer has been completed in the highest place of the totalizer if a minus value is exceeded by a plus value, and after the positive introduction of the fugitive 1.

Fig. 21 is an elevation of the totalizer, viewed from the left.

Fig. 22 is a perspective illustration of the cancelling device in the totalizer, for total and subtotal taking, some parts being shown at a distance from each other, and some being broken away for the sake of clearness.

Fig. 23 is a perspective illustration of certain parts of the totalizer, viewed from the right and the front of the machine.

Figs. 24 and 25 are central sections through the totalizer, viewed from the left and, respectively, in the positions of its gears in which the number rollers of the totalizer display "0" and in which they display "9."

Fig. 26 is a perspective illustration of the mechanism for printing symbols, viewed from the right and the front of the machine.

Fig. 27 is a perspective illustration which is similar to the one in Fig. 17 but shows a modified shutter, and

Figs. 28 to 30, inclusive, show three distinct positions of another modified shutter.

1. General description of the controlling mechanism

The machine is preferably driven by a motor but it may also be driven by a crank for manual operation. Through suitable gearing, the motor first turns the driving shaft **10** of the machine through 90 degs. in the direction of the arrow **11**, and then back into its initial position for the same angle against the arrow **11**. These two partial rotations of the driving shaft through 90 degs. make up what will be referred to as the cycle of the machine. If a crank is provided instead of a motor, the driving shaft **10** is returned into its initial position by a spring.

The machine to which the controlling mechanism has been adapted, is a usual adding machine with a set of ten number keys **12** and a set of six operation keys **13** two of which, viz. the total taking key, with its key bar **200**, and the subtotal taking key, with its key bar **197**, have been illustrated in Fig. 26.

When an operation key **13** has been depressed, the motor is cut in by means of a switching member **60A** (Fig. 2). At the same time, the depressed key is locked by means that will be fully described below, until a cycle has been completed and the driving shaft **10** has returned into its initial position whereupon the key, is released and the motor is cut out by the switching member **60A**.

The motor, its switching means and its gearing, have not been illustrated.

The ten-key adding machine is equipped with a setting wheel carriage having spring-controlled setting wheels **310** to be operated from the number keys **12** by the usual mechanism, not shown. Teeth on each setting wheel **310** mesh with teeth of sectors **1**, one sector being allotted to each setting wheel **310**. A front slot **15** and a rear slot **18** are made in each sector by which the sectors are guided on a fixed rod **16** at the front of the machine and a rod **17** at its rear which is reciprocated for a purpose to be described below. The sectors **1** have teeth at both ends and a plain central portion where a movable rack **3** is arranged. This rack **3**, as best seen in Fig. 9, has a slot **21** in its rear and with which this end is guided on a headed rivet **20** in the corresponding sector **1**. Near its front end the rack **3** is equipped with another headed rivet **20'** which slides in a slot **21'** in the sector.

The setting wheels **310** which have been rotated in conformity with the values of their number keys **12**, are returned into their initial positions by the drive of the machine and, in thus returning, shift the sectors **1** on their rods **16** and **17** in the direction of the arrow **2** in conformity with the values which have been introduced. This movement is transmitted to a totalizer **4** through the racks **3**. The totalizer **4** has an end plate **229** at the left, an intermediate plate **234**, Fig. 22, and an end plate **152** at the right. The end plates **152** and **229** are connected by stays **151** and **151a** which extend through holes in the intermediate plate **234**. The end plate **229** at the left is mounted to swing about a trunnion **153a** in the left-hand side plate—not shown—of the machine. Similarly, the end plate **152** is mounted on a trunnion **153** which is supported by the right-hand side plate of the machine and intermediate frame plate, both not shown. Addition gear wheels **6**, with tens shift cams **41** (Fig. 22), are mounted on a shaft **215** in the totalizer **4**, and subtraction gear wheels **8**, with tens-shift cams **40**, are mounted on another shaft **207**. The gear wheels **6** and **8** are in mesh, and an intermediate gear wheel **8a** on a shaft **257** is inserted between each subtraction wheel and the corresponding number roller **42**. A portion of the top plate P of the machine, with an inspection hole N for exposing the number rollers **42**, has been shown in Fig. 12.

When values are introduced additively into the totalizer **4**, it is turned about its trunnions **153** and **153a** in the direction of the arrow **5** ADD and the addition wheels **6** move into mesh with the racks **3** on the sectors **1**. When values are introduced subtractively, the totalizer **4** is turned in the opposite direction, arrow SUB **7**, and the subtraction wheels **8** of the totalizer move into mesh with the rack **3**.

The values which have been introduced are printed by types **9** in the upper ends of the sectors **1** which are thrown against a sheet on the paper cylinder **312** of the machine by the usual hammer mechanism **311**. The symbols on the operation keys **13** are printed by an arcuate member **273**, Fig. 26, as will be described in due course.

The object of the invention is as follows:

Suppose that there is a plus value in the totalizer **4** which, for instance, has 11 places. Suppose that this plus value is 000 000 005 75 and that it is understepped by the minus value **752**. When the first cycle has been completed, there appears in the totalizer **4** an intermediate value which is the complement of the negative balance without deduction of the fugitive 1, and, in the present instance, is 999 999 998 23. In order that this complementary may be printed in positive form on the paper of the cylinder **312**, the keys are locked during the first cycle and the drive of the machine is thrown in for another cycle, for the introduction of the fugitive **1**.

The introduction of the fugitive 1 is necessary because the machine has two total taking mechanisms which are operated by a single key, the number rollers **42** of the totalizer **4** being returned to "0" if it is desired to print a positive value by total taking, and advanced to "9" if it is desired to print a negative value in positive form by total taking.

During the second cycle of the machine, the fugitive 1 is subtracted from the complementary value 999 999 998 23, and the number rollers **42** of the totalizer **4** now indicate 999 999 998 22. The negative balance is now printed in positive form by total or subtotal taking, the number rollers **42** being advanced to "9." In the present instance, the positive form of the negative balance is 177. When the capacity of the totalizer **4** is overstepped, in the negative sense, the inspection opening N is closed by a shutter, as will be described.

If, on the other hand, a minus value, for in-

stance, 999 999 999 951 is overstepped, for instance, by a plus value 75, the complementary value 000 000 000 025 appears in the totalizer 4 after the first cycle has been completed, this being the positive balance without the fugitive 1. As the value 999 999 999 951 represents an understepping of the zero position for 50, the fugitive 1 must be added in order that the positive value be correctly indicated in the totalizer 4 and printed. This is the reason why during the first cycle the keys are locked and the drive of the machine is released for one more cycle for introducing the fugitive 1. During this second cycle the fugitive 1 is inserted and the totalizer 4 now displays the real positive balance 000 000 000 26.

In order to keep the circuit of the motor which has been closed during the introduction of positive or negative values positively by the key locking means, in made condition also during the second cycle and to prevent the depression of number and operation keys during this cycle, the means have been provided which will now be described.

2. The means for locking the number and operation keys

As mentioned, there are as many sectors 1 as there are places in the totalizer 4, that is, eleven. It has been described that the sectors 1, by their slots 15, are mounted to slide on the rod 16 which is secured in the left and right-hand side plates of the machine, and, by their slots 18, are mounted to slide on the other rod 17 which is positively reciprocated in the slots 16 of the sectors 1 by the drive of the machine. As also described, the rack 3 is guided at the left-hand side of each sector 1 in the region of its plain central portion by the slot-and-rivet means 20, 21 and 20′, 21′.

A pawl 23 as best seen in Figs. 1 and 9, is fulcrumed at the left-hand side of each sector 1 about a rivet pin 22. The free end of the pawl 23 is forked. Its arm 24 engages in a notch 25 in the lower edge of the rack 3 whose front edge 26 it engages in the initial position, so that the rack 3 can move in the direction of the arrow 2 only while positively engaged by the pawl 23. A rivet 28 is inserted in the other arm 27 of the pawl 23 and extends through a drop-shaped hole 29 in the sector 1 and into a longitudinal slot 30 in the corresponding tens-shift member 31.

The tens-shift members 31, as best seen in Fig. 7, have each a slotted tail 32 by which they are guided on a rod 34, and an arcuate slot 33 in the body which engages about an abutment rod 35. A spring 36 whose rear end is connected to a hook projecting from the member 31, and whose front end is secured to a transversely extending rod 36′, pulls the member in upward direction until the lower end 37 of its arcuate slot 33 bears against the rod 35 from below, this defining the initial position of the member 31. With the exception of the tens-shift member 31′ at the right-hand side of the sector 1 at the units place, Fig. 7, each tens-shift member 31 has a pair of cams 38 and 39 projecting from its upper edge for cooperation, respectively, with the tens-shift cams 40 and 41 of the gear wheels 8 and 6 in the totalizer 4, the cams 40 and 41 being best seen in Fig. 22. When the totalizer 4 is turned about its trunnions 153 and 153*a* in the direction of the arrow 5 ADD in Fig. 1, for addition, the tens-shift cams 41 on the shaft 215 of the addition wheels 6 cooperate with the cams 39 of the corresponding tens-shift members 31 when the number wheels 42 move from "9" to "0." When the totalizer 4 is turned in the direction of the arrow SUB 7, for subtraction, the cams 40 on the shaft 207 of the addition wheels 8 perform a similar function with respect to the cams 38 when the number wheels 42 move from "0" to "9." By these means, the tens transfer to the next higher place is prepared. For completing the tens transfer, each tens-shift member 31, with the exception of 31′, has a rearward extension 43 for cooperation with actuating members 313, 314 and 315, Fig. 1.

Arranged at the left of the section 1 which corresponds to the highest place is an extra tens-shift member 31, Figs. 1 and 7. The cams 38 and 39 of this extra member cooperate with the tens-shift cams 41 and 40 for the gear wheels 6 and 8 at the highest place. A pin 44 is riveted into the extra member 31 and cooperates with the upper end 45 of the left-hand arm 46 of a coupling frame 47 whose right-hand arm 125, Fig. 7, has an extension 124 whose free end 123 engages a pin 122 in the tens-shift member 31′ at the units place. The arms 46 and 125 are fulcrumed on a rod 48 which is secured in the left-hand side plate and an intermediate frame plate—both not shown—of the machine.

A bolt 49 is screwed into the lower end of the left-hand arm 46 of the coupling frame 47 and on this bolt is pivoted the rear end of a locking slide 50 whose front end presents a hook 69 and is slotted at 52 for sliding on a headed screw 51 in the left-hand side plate of the machine. A spring 53 whose front end is connected to a lug 54 extending from the lower edge of the locking slide 50, and whose rear end is anchored on a rod 55, pulls the slide 50 to the rear against the arrow 56 and turns the coupling frame 47 against the arrow *a*, the initial position of the slide 50 and frame 47 is defined by the end 45 of the arm 46 engaging the pin 44 on the extra tens-shift member 31.

A frame for locking the operation keys 13 as best seen in Figs. 1 to 7 comprises a bar 60, an arm 79*a* at the left, and an arm 79 at the right by which the frame is pivoted about a bar 61 secured in the side plates of the machine. The arm 79*a* is held on the bar 61 by a spring washer 62. Secured to the inner side of the arm 79*a* is a pusher 59 which extends to the rear and is equipped with a horizontal lug 58 extending to the right from its upper edge, and a hook 70 at its rear end. A lug 57 extends to the left from the upper edge of the locking slide 50 for cooperation with the lug 58 of the pusher 59. A catch 63 is mounted to swing on the bar 61 at the inner side of the arm 79*a* with its boss which is bent to the shape of the letter "U." The catch 63 has a lug 66 which extends to the left and is held against the upper edge of the pusher 59 by a spring 64 whose lower end is anchored in the pusher 59 and whose upper end is connected to a lug 65 at the upper end of the catch 63. This defines the initial position of the catch 63. Notches 67 and 68 are formed in the lower edge of the catch 63 for engaging alternately the hook 69 of the slide 50 which extends to the right from the slide.

The means for locking the number keys 12 will now be described. The hook 70 (Figs. 1, 2, 3 and 7) which extends to the right from the rear end of the pusher 59, is for cooperation with an arm 71. The arm 71 forms part of a

locking-control frame 72 which is fulcrumed about a shaft 73 in the left-hand side plate of the machine and an intermediate frame plate—not shown. An arm 75 extends in forward direction from the frame 72 and a spring 74 turns the locking control frame 72 anti-clockwise and the front end of the arm 75, Fig. 1, engages a locking strip 77 which is fulcrumed about a shaft 76. The locking strip 77 is turned clockwise and engages lugs 78 on the key bars of the number keys 12. When a key 12 is depressed, its lug 78 swings the locking strip 77 anti-clockwise which, through arm 75, turns the locking control frame 72 clockwise against its spring 74, and the arm 71 of the frame 72 engages below the hook 70 at the rear end of the pusher 59.

Secured to the inner side of the right-hand arm 79 of the operation key locking frame 60, Figs. 4, 5, 6 and 7, is a bracket 80 which at its rear end presents a spring hook 81. A spring 82 extends from this to a spring hook 83 of an unlocking arm 84 whose boss is bent to the shape of the letter "U" and is placed on the right-hand end of the bar 61 at the outer side of the arm 79. The spring 82 pulls a lug 85 of the unlocking arm 84 against an abutment 86 on the bracket 80, as best seen in Fig. 5. A rivet pin 87 is inserted in the arm 84 and on this is pivotally mounted and held by a spring washer 89, the front end of an unlocking slide 88 whose rear end is slotted at 90 and is mounted to slide on a headed rivet 91 in the right-hand side plate of the machine. A double-armed lever 93 is pivotally connected to the unlocking slide 88 by a rivet pin 92, and a rivet 95 which engages in a recess 94 in the double-armed lever 93 limits the swinging movement of 93 with respect to 88. A spring 97 which connects a pin 96 in the double-armed lever 93 to the rivet 91 by which the slotted rear end of the unlocking slide 88 is guided, turns the double-armed lever 93 anti-clockwise and holds the base of the recess 94 in the double armed lever 93 against the rivet 95 in the unlocking slide 88. This position is shown in Fig. 4. The rear end 98 of the double-armed lever 93 is engaged by a lug 100 (Figs. 4 to 6) on a cam plate 101 which is mounted to rotate on the driving shaft 10 by a square bearing boss 102. The lug 100 extends to the right from the cam plate 101 and its front side 99 engages the end 98 of the double-armed lever 93. The cam-plate 101 performs the same cycle as the machine, that is, 90 degs. in the direction of the arrow 11, and the same angle in the opposite direction, as described for the driving shaft 10. The means for actuating the cam plate 101 from the drive of the machine have not been illustrated.

The front end 103 as best seen in Figs. 4, 5, 6 and 7 of the double-armed lever 93 is recessed at 104 for engaging a lug 105 extending to the right from the lower end of a connecting rod 106. The upper end of the connecting rod 106 is pivoted on a rivet pin 106*a*, Fig. 7, at the rear end of an operating frame 107 which which is fulcrumed about, a shaft 108 secured in the right-hand side plate and an intermediate frame plate, and is held by spring washers (not shown). A spring 109, Figs. 4, 5 and 6, whose uper end is connected to a spring hook 110 of the connecting rod 106, and whose lower end is anchored in a holder 111 below the bottom plate 112 of the machine, tends to turn the connecting rod 106 anti-clockwise as viewed in Figs. 4 to 6. The connecting rod 106 extends through a hole 115 in the bottom plate 112 and the spring 109 holds the rear edge 113 of the connecting rod 106 against the rear end 114 of the hole 115. At the same time, the spring 109 turns the frame 107 clockwise. A tongue 116 extends to the left from the front end of the frame 107 for cooperation with the operation keys 13, as will presently be described.

The key bars of the operation keys 13, Figs. 4 and 26, with the exception of the repetition key, are riveted to bellcranks 117 at their lower ends, Fig. 26. The bellcranks 117 are mounted to swing about the shaft 108 on which the operating frame 107 is fulcrumed. At the lower end of the bellcrank 117, which is associated to the total taking key 13 is pivoted to a total slide 201, and at the lower end of the bellcrank 117, which is associated tot he subtotal key 13, is pivoted a s-bu total slide 198, at 117*a*, and a spring 117*b* tends to turn the bellcranks 117 clockwise. At its upper end, each bellcrank 117 has a sector-shaped cam, with a notch 119 and a tooth 120 at the lower side of the notch 119. Under the action of spring 109 the tongue 116 of the operating frame 107 bears against the front sides of the bellcranks 117. When one of the operating keys 13 is depressed the locking bar 60 of the frame 79, 79*a*, 60 engages in the notch 119 of the bellcrank 117 which is connected to the depressed key, and at the same time the bar 60 engages below the teeth 120 of the bellcranks 117 allotted to the other keys 13.

3. The operation of the locking means for the keys 12 and 13

The operation of the locking means when the capacity of the totalizer is overstepped in the negative sense will now be described. Assume by way of example that it is intended to introduce the numeral "2" subtractively into the totalizer 4 which is in zero position.

When the number key 12 with the numeral "2" is depressed, the corresponding setting wheel 310 (Fig. 1) which, as described, is mounted on a setting-wheel carriage and controlled by a spring, is rotated for two units by mechanism, not shown. At the same time, an abutment 78 on the said key 12 acts on the locking strip 77 and swings this anti-clockwise about its shaft 76. The strip 77 now acts on the arm 75 of the locking-control frame 72 and swings this frame clockwise about the shaft 73 against the action of the spring 74. When the number key 12 is released the setting wheel carriage is moved to the left for one place and the setting wheel 310 which, as mentioned, has been rotated for two units, is moved into operative connection with the sector 1 of the lowest calculating place. For calculating the value "2" subtractively, the subtraction key 13 is depressed and its bellcrank 117 is turned anti-clockwise. The bellcrank 117 now exerts pressure on the tongue 116 of the operating frame 107 and the frame is turned anti-clockwise against the action of the spring 109. The coupling rod 106 is now raised and its lug 105 engages in the recess 104 of the double-armed lever 93, Fig. 5, turning this clockwise against the action of the spring 97 and moving its rear end 98 away from the lug 100 of the cam plate 101. The unlocking slide 88 and the double-armed lever 93 are now shifted to the rear, as indicated by the arrow 121, until the end 90*a* of the slot 90 in the unlocking slide 88 bears against the headed rivet 91. The front end of the unlocking slide 88 is pivotally connected to the arm 84 at 87, Fig. 7, as described, and when the unlocking slide 88 is shifted in the

direction of the arrow 121, the arm 84 is turned about the bar 61 anti-clockwise, as viewed in Fig. 7. The lug 85 of the arm 84 now strikes the abutment 86 of the bracket 80 which, as described, is secured to the right-hand arm 79 of the locking bar 60. The bracket 80, the arm 84, and the locking bar 60 are now turned anti-clockwise about the bar 61. This causes the locking bar 60 to enter the notch 119, Fig. 4, of the bellcrank 117 which is allotted to the subtraction key 13, holding the subtraction key depressed. At the same time, the locking bar 60 engages below the teeth 120 of the bellcranks 117 allotted to the other operation keys, preventing depression of another operation key.

When the locking bar 60 is moved anti-clockwise and into its locking position, as shown in Fig. 2, the hook 70 at the rear end of the pusher 59—which, it will be remembered is secured to the left-hand arm 79*a* of the locking bar 60—moves toward the front edge of the arm 71 on the locking control frame 72 and, through the means operatively connected to this frame 72, as described, also prevents depression of the number keys 12 for introducing a value, as the locking-control frame 72 which upon depression of a number key 12 tends to turn clockwise, is arrested immediately it begins to turn, by the arm 71 engaging the hook 70 of the pusher 59. In the vertical or initial position of the locking frame 60, 79, 79*a*, as shown in Fig. 1, the rear end 63*a* of the catch 63 which, through spring 64, is moved anti-clockwise with the pusher 59, is intercepted by the hook 69 of the locking slide 50 after the locking control frame 72 has been turned through a certain angle so that the catch 63 is now arrested and tension is put on the spring 64 upon further movement of the pusher 59.

When the locking frame 72 has been moved into its locking position the contact in the circuit of the motor is closed by the switching member 60A and mechanism, not shown. The motor now is started and, through the drive of the machine, throws the totalizer 4 into subtraction position, that is, in the direction of the arrow SUB 7 in Fig. 1. In this position of the totalizer 4, its driving gear wheels 8 mesh with the racks 3 of the sectors 1. Hereupon, that setting wheel 310 of the setting-wheel carriage which has been rotated for two units by depression of the said number key "2," is returned into its initial position and shifts the sector 1 of the lowest place for two units in the direction of the arrow 2. The rack 3 of this sector, through gear wheels 8, 8*a*, and 8*b*, turns the number wheel 42 of the lowest place in the totalizer 4 through two units in clockwise direction. When this number roller 42 changes from "0" to "9," the widened tens-shift cam 40, Fig. 22, of the driving gear wheel 8 of the lowest or units place engages the cam 38, which is presented to it, of the tens-shift member 31 of the next higher or tens place. The tens shift member 31 of this place is now shifted downwards at an inclined angle by its tail 32 and slot 33. This tens-shift member 31 whose rearward extension 43, due to the shifting of the member, extends into the path of the actuating members 313, 314, and 315, is now shifted into its active position, Fig. 2, in downward direction by the said actuating members. As has been described, a rivet 23 in the arm 27 of the pawl 23 engages in a longitudinal slot 30 in each tens-shift member 31 through the hole 29 in the corresponding sector 1. The shifting of the tens-shift member 31 of the tens place causes the pawl 23 on the corresponding sector 1 to swing anti-clockwise and its arm 24 to shift the rack 3 of the sector 1 at the tens place for one unit in the direction of the arrow 2. By this shifting of the rack 3, the set of gear wheels 8, 8*a*, 8*b*, and the number roller 42 at the tens place of the totalizer 4 are turned through one unit subtractively, and similar operations as with the units number roller 42 are now performed when the tens number roller 42 moves from "0" to "9." These operations are repeated step by step until the highest calculating place. At the moment the number roller 42 at the highest place of the totalizer 4 is turned from "0" to "9" in consequence of the said tens-shifting operations, the tens-shift cam 40 of the driving gear wheel 8 of this place prepares in the usual manner the tens-shift slide 31 at the left of the sector 1 of the highest place, and this tens-shift member 31 is also shifted into its lower final position, Fig. 2, by its rearward extension 43 and the actuating members 313, 314, and 315. The pin 44 of this tens-shift member 31 acts on the upper end 45 of the arm 46 at the left of the coupling frame 47 and swings this frame 47 in the direction *a*, Fig. 1, about its rod 48. This, through bolt 49, shifts the locking slide 50 forward in the direction of the arrow 56 against its spring 53. The lug 57 of the locking slide 50 is now on the lug 58 of the pusher 59. At the same time, the rear end 63*a* of the catch 63 is cleared by the hook 69 at the front end of the locking slide 50 which hook now enters the notch 67 in the catch 63 and, as the catch 63 is no longer retained by its rear end 63*a* engaging the hook 69 from above, the tensioned spring 64 turns the catch 63 anti-clockwise until it is arrested by its lug 66 bearing against the upper edge of the pusher 59. The hook 69 at the front end of the locking slide 50 is now caught in the notch 67. The locking slide 50 and the coupling frame 47 are now arrested in the positions shown in Fig. 2.

The drive of the machine now completes the partial rotation through 90 degs. of its driving shaft 10 in the direction of the arrow 11 and the driving shaft 10 then returns into its initial position. At the same time the tens-shift members 31 which have been released by the actuating members 313, 314, and 315, return into their initial positions under the action of their springs 36.

Shortly before the cam plate 101, Figs. 4 to 6, which, as described, rotates with the driving shaft 10, as occupied its normal position, Fig. 6, its lug 100 engages the rear end 98 of the double-armed lever 93 and shifts this end the unlocking slide 88 into their normal positions, as also shown in Fig. 6, against the arrow 121. The unlocking slide 88, through the rivet pin 87, turns the arm 84 back in anti-clockwise direction. The spring 82 which connects the arm 84 to the bracket 80 on the right-hand arms 79 of the locking frame 79, 60, 79*a* is tensioned and tends to turn the locking frame 79, 60, 79*a* and, through the pusher 59, the catch 63 in the same direction. This, however, is prevented by the lug 57 which, as shown in Fig. 2, is on the lug 58 of the pusher 59. By these means, the locking frame 79, 60, 79*a* and the catch 63 are held in locking position, and the return movement of the arm 84 merely tensions the spring 82. As the locking bar 60 of the locking frame 79, 60,

79*a* remains in its locking positions the contact of the motor remains closed, the motor remains active and performs a second cycle.

During this second cycle, the coupling frame 47, in the manner which will be described in section 5, "The operation of the mechanism for introducing the fugitive 1", is turned further in the direction of the arrow *a* and into the position shown in fig. 3. The coupling frame 47, through bolt 49, shifts the locking slide 50 further in the direction of the arrow 56 and its lug 57 clears the lug 58 of the pusher 59 while its hook 69 moves from the notch 67 in the catch 63 and enters the notch 68. When, in this relative position of the lugs 57 and 58 at the end of the cycle the lug 100, figs. 4 to 6, of the cam plate 101 returns into their normal positions the double-armed lever 93, the unlocking slide 88, and the arm 84, the spring 82 of the arm 84 is able to move the locking frame 79, 60, 79*a*, the pusher 59, and the catch 63 out of the position in which the number keys 12 and the operation keys 13 are locked, and this positively opens the contact in the motor circuit. The notch 68 in the catch 63 releases the hook 69 of the locking slide 50, and the slide and the coupling frame 47 return into their initial positions under the action of the spring 53, in which initial positions the end 45 of the arm 46 on the coupling frame 47 engages the pin 44 of the tens-shift member 31 which is at the left of the highest place. The number roller 42 of the lowest or units place has been rotated for two units negatively at the beginning of the cycle, and this number roller 42 displays "8" while the number rollers 42 of the other places are rotated from "0" to "9" by tens shifting. In order to calculate the usual complementary value of the value "2", that is "7", in the units place of the totalizer 4, and in order to print the complementary value in positive form when total or subtotal taking, it is necessary to introduce the fugitive 1 into the lowest calculating place during the second cycle, in the present instance, subtractively. This is effected by the mechanism which will now be described.

4. The mechanism for introducing the fugitive 1

The tens shift member 21, figs. 7 to 11, which is arranged at the right hand side of the sector 1 of the units place is without the cams 38 and 39 of the other tens shift members 31, and without their tail 43, so that the actuating members 313, 314, and 315 do not act on this tens-shift slide 31′ for the purpose of tens shifting. This tens-shift member 31′ which is furthest to the right, is equipped with the pin 122, as described, which projects to the right for cooperation with the end 123 of the extension 124 on the right-hand arm 125 of the coupling frame 47. In the initial position of the coupling frame 47, fig. 8, the end 123 is at a distance from the pin 122 which corresponds to the angle the coupling frame 47 turns through during the first cycle. Secured to the right-hand arm 125 of the coupling frame 47, preferably by spot welding, is a plate 126 from which a lug 127 extends to the right at right angles. This lug 127 cooperates with a pair of lugs 128 and 129 which project in spaced relation from the lower side of a cancelling pawl 130, as best seen in fig. 9. The cancelling pawl 130 is mounted to swing about the rod 48 at the right of the coupling frame 47 and a spring 133 tends to turn the cancelling pawl 130 clockwise. In the normal position of the cancelling pawl 130, fig. 8, its lug 129 bears against the rear edge 129*a* of the lug 127 of the plate 126. The spring 133 is anchored, at one end, on a pin 134 which is riveted into the arm 125 of the coupling frame 47, and its other end is attached to a pin 135 which is secured in the cancelling pawl 130. In this normal position, a tooth 136 at the front end of the cancelling pawl 130 is beyond the path of a hook 137 on a cancelling sector 138 into whose path it projects in the positions illustrated in figs. 10 and 11. The cancelling sector 138 has a slot 140, fig. 9, in its front end with which it slides on the rod 16 the front slots of the sectors 1 are mounted to slide on, and in its rear end it has a slot 139 which extends transversely to the slot 140 and with this the cancelling sector 138 is placed on the rod 17 which, as described, is reciprocated by the drive of the machine. This rod 17 which slides in the longitudinal slots 18 of the sectors 1, moves the cancelling sector 138 positively upwards with the arrow 2, and downwards against the arrow, during every cycle of the machine.

5. The operation of the mechanism for introducing the fugitive 1

When the coupling frame 47 is moved from the position in fig. 1 into that in fig. 2 in the first cycle of the machine in the direction of the arrow a while the driving shaft 10 performs its first partial rotation through 90 degs. in the direction of the arrow 11, by tens shifting up to the highest place, as described in section 3, "The operation of the locking means for the keys 12 and 13", the end 123 of the extension 124 at the right of the coupling frame 47 engages the pin 122 of the tens-shift member 31′ at the units place, fig. 10. The coupling frame 47 remains in the corresponding position for the present since the locking slide 50 is locked by the lugs 57 and 58, the notch 67, and the hook 69 of the slide 50, as shown in fig. 2. When the coupling frame 47 was turned in the direction of the arrow *a*, the tooth 136, fig. 7, of the cancelling pawl 130 was also influenced. At this moment, however, the cancelling sector 138 has been shifted by the movable rod 17 so far in the direction of the arrow 2, that is, upwards, that its tooth 137 has moved beyond the tooth 136 of the cancelling pawl 130, so that the pawl 130 could not partake in the movement of the coupling frame 47. In consequence, the spring 133 of the cancelling pawl 130 has been tensioned. When the driving shaft 10 is turned back into its initial position against the arrow 11, the movable rod 17 shifts the cancelling sector 138 against the arrow 2, and the inclined lower edge of the hook 137 slides along the tooth 136 of the cancelling pawl 130. After the hook 137 has moved beyond the tooth 136 of the cancelling pawl 130 the pawl is turned clockwise by its tensioned spring 133 and its tooth 136 projects into the path of the hook 137 of the cancelling sector 138, as shown in fig. 10. The spring 133 pulls the lug 129 of the cancelling pawl 130 again toward the rear edge 129*a* of the angular lug 127 on the plate 126.

Now, the machine performs its second cycle. The main driving shaft 10 is again turned through 90 degs. in the direction of the arrow 11. The movable rod 17, through the transverse slot 139, shifts the cancelling sector 138 in the direction of the arrow 2. When the cancelling sector 138 has moved through about four fifths of its stroke, its hook 137 engages the tooth 136 of the cancelling pawl 130 and, as the cancelling sector 138 moves on in the direction of the arrow

2, the cancelling pawl 130 is swung clockwise in the direction of the arrow *a* in fig. 11. The coupling frame 47 is turned about its rod 48 in the same direction through the lugs 127 and 129 and the plate 126. The end 123 of its right-hand arm 125 which has engaged the pin 122 of the tens shift member 31′ at the units place, as described, which member 31′ is allotted to the sector 1 at the same place, and is now shifted in downward direction on the rods 34 and 35 by its tail 32 and its slot 33. As has been described, the rivet pin 28 engages in a slot 30 in the member 31′ and the descending member turns the pawl 23 clockwise about its pivot 22 and the arm 24 of the pawl shifts the rod 3 of the corresponding sector 1 at the units place through one unit in the direction of the arrow 2. The rack 3, through the gear wheel 8 and the train of gears 8*a* and 8*b*, turns the number roller 42 at the units place of the totalizer 4 subtractively for one unit, and this number roller 42 now indicates the complementary value "7."

When the driving shaft 10 returns into its initial position against the arrow 11, the rod 17 pushes back the cancelling sector 138 against the arrow 2 and the hook 137 of the sector clears the tooth 136 of the cancelling pawl 130, so that, when the driving shaft 10 has arrived in its initial position, all parts are free to return into their normal positions, as shown in fig. 1 under the action of the lug 100 of the cam plate 101 which, as described, engages the rear end 93 of the double-armed lever 93, the spring 36 of the tens-shift member 31′, and the spring 53 of the locking slide 50.

Obviously, the fugitive 1 may also be added additively to the lowest place if, for instance, a value is calculated additively which oversteps the value which has previously been calculated subtractively. In this case, after the totalizer 4 has been swung into its additive position in the direction of the arrow 5 ADD, fig. 1, and in the first cycle a number roller 42 has been turned from "9" to "0," and the tens shift cam 41 of the corresponding driving gear wheel 6 has acted on the cam 39 of the allotted tens-shift member 31, for preparing a tens-shift operation to the next higher calculating place, and after this operation has been completed, the cancelling pawl 130 is moved into its preparatory position as shown in fig. 10 by the tens transfer from place to place up to the highest place. During the second cycle which is positively started after the first cycle, the fugitive 1 is calculated in the units place as with addition the totalizer 4 is turned in the direction 5 ADD, causing the driving wheels 6 to mesh with the racks 3 and reversing the number rollers 42 which had previously been rotated clockwise.

6. *The totalizer control mechanism*

If it is desired to take a total or a subtotal after the calculation of minus values during which the capacity of the totalizer 4 has been overstepped negatively beyond the zero position, the members by which the species of calculation of the machine is determined must be reversed. Such members normally turn the totalizer 4 subtractively when a total or subtotal is taken. Reversing is effected upon overstepping of the totalizer capacity in the negative sense in dependence of the coupling frame 47 which, as described, controls the key locking means and effects the introduction of the fugitive 1, by the mechanism which will now be described for preparing the totalizer 4 for additive turning for total or subtotal taking, if any.

A bearing screw 141, fig. 9, is inserted in the right-hand arm 125 of the coupling frame 47 through a hole in the plate 126, as best seen in fig. 9. Fulcrumed on the bearing screw 141 is a fork 142, fig. 13, whose boss is bent to the shape of the letter "U." As described, the trunnion 153 for the right-hand end plate 152 of the totalizer 4 is supported by the right-hand side plate of the machine and an intermediate plate. Mounted to swing on the trunnion 153 at the right of the intermediate plate is a totalizer controlling bellcrank 148 with an upwardly extending arm 147 and a rearwardly extending arm 158. The upper end of the arm 147 is forked at 150 and engages the stay 151 of the totalizer, as shown in figs. 12, 14, 16, 18, 19, and 20, so that, as the totalizer controlling bellcrank 148 turns about the trunnion 153, the totalizer 4 is positively swung about its trunnions 153 and 153*a*. The bellcrank 148 is connected to the fork 142 by a coupling rod 144 whose lower end is pivoted on a rivet pin 143 and held by a spring washer 145. The upper end of the coupling rod is connected to a rivet pin 146 in the arm 147 of the bellcrank.

A pair of holders 154 and 155, fig. 12, are mounted to swing on the trunnion 153 between the right-hand side plate of the machine and the totalizer controlling bellcrank 148. A spring 156 is attached to the upper ends of the holders and tends to pull them together. In the normal position, fig. 12, of the totalizer 4 the inner edges of the holders engage both sides of the stay 151 and of a rivet 157 in the intermediate plate of the machine, holding the totalizer 4 and the bellcrank 148 in their normal positions.

Pivoted on a rivet pin 159 in the free end of the rearwardly extending bellcrank arm 158 is a T member 160, with a lug 161 extending to the left from the lower front end of the member, and a lug 162 extending to the left from the lower rear end of the member 160. These lugs 161, 162 cooperate respectively with lugs 163 and 164 at the front and the rear of a rocker 165, Figs. 12, 14, 16, 18, 19 and 20, which is fulcrumed on a bearing screw 166 in the intermediate plate of the machine. An arm projects upwardly from the rocker 165 and on this is mounted to rotate a roller 168 for cooperation with a cam plate 169. The cam plate is keyed on the driving shaft 10 and a spring 170 holds the roller 168 against the edge of the cam plate 169. In the normal position of the totalizer 4 and its control, as shown in Fig. 12, the lug 162 of the T member 160 projects into the path of the lug 164 of the rocker 165 and this causes the positioning of the totalizer 4 for addition in the direction of the arrow 5 ADD.

A finger 171 projects to the right from the lower end of the T member 160, as best seen in Fig. 13, for a purpose to be described below.

The fork 142 on the bearing screw 141 has a pair of prongs 172 and 173 for cooperation with lugs 174 and 177 of a rake 176. When the fork 142 is raised its upper prong 172 is in position for cooperation with the lug 174 and when it is lowered its lower prong 178 is in a similar position with respect to the lug 177. The two lugs 174 and 177 extend angularly from the left-hand side of a U-shaped head 175 on the rake 176. The rake 176 which is mounted to swing on the rod 16 on which the lower ends of the sectors 1 are mounted to slide, the rod 16 extending beyond the right-hand side plate of the machine for the re-

ception of the rake 176, has an upwardly directed arm which supports the head 175 with its lug 174 and 177, a rearwardly directed arm 178, and a downwardly directed arm 176*a*. The arm 178 of the rake 176 which extends to the rear is forked at its rear end, as best seen in Fig. 13, and has two lugs 179 and 180 which, as the rake 176 swings about the rod 16, are alternately arrested by an abutment rod 181 which is screwed into the intermediate plate of the machine. The arm 178 has a longitudnal slot 182 through which projects a rivet 183 in the left-hand arm 184 of a frame 185 for controlling the shutter G, the printing of the symbols by the arcuate member 273, Fig. 26, and for determining the species of calculation. This frame 185 is mounted to swing about the abutment rod 181. The right-hand arm 186 of the frame 185 bears a rivet 187 to which is attached one end of a spring 188 whose other end is secured to a pin 189 near the rear end of the arm 178 of the rake 176. The spring 186 turns the rake 176 clockwise about the rod 16 until the upper lug 179 of its arm 178 is arrested by the abutment rod 181, this being the normal position of the rake 176. Owing to the connection 182, 183, this also determines the normal position of the frame 185.

Riveted into the left-hand arm 184 of the frame 185 is a pin 190, Fig. 15, on which are pivoted two links 191 and 192. The link 191 at the right has a hole 193 in its lower end with which it is placed on a rivet pin 194 at the front end of an arm 195 whose rear end is fulcrumed about a rivet 196 in the sub-total slide, or manual controlling member, 198, which, as described with reference to Fig. 26, is pivotally connected at 117*a* to the bellcrank 117 to which is riveted the key bar 197, 118 of the subtotal key 13. The link 192 at the left is similarly connected to an arm 199 which is fulcrumed about a rivet 199*a*, Fig. 26 in the total slide, or manual controlling member, 201 which is, in the manner described, operatively connected to the bellcrank 117 to which the bar 200, 118 of the total taking key 13 is riveted. The rear ends of the two slides or manual controlling members, 198 and 201, are slotted at their rear ends, end with such longitudinal slots 202 and 203, respectively, are mounted to slide on a rod 202*a*. In the initial position projections 204 and 205 at the rear ends of the respective arms 195 and 199 can cooperate with the finger 171 of the T member 160 upon shifting in the direction of the arrow 206. The arm 195 is guided by the right-hand side of the downwardly directed arm 176*a* when turned clockwise.

7. The operation of the totalizer control mechanism

For a better understanding of this operation the control and the swinging in of the totalizer 4 will now be briefly described for total and subtotal taking if there is a positive value in the totalizer 4. By way of example, when the total taking key 13 in Fig. 26 is depressed, the total slide 201 is shifted in the direction of the arrow 206 in Fig. 15, and the projection 205 of the arm 199, acting on the finger 171 of the T member 160, swings the member anti-clockwise about its pivot 159 so that its front lug 161 engages below the lug 163 of the rocker 165, as shown in Fig. 14. When the drive of the machine rotates the driving shaft 10 through 90 degs. in the direction of the arrow 11, the cam plate 169 on the shaft 10 immediately acts on the roller 168 and turns the rocker 165 anti-clockwise. The lug 163 of the rocker 165 engages the lug 161 of the T member 160 and pulls this down. Through the rivet pin 159 in the bellcrank arm 158, the totalizer controlling bellcrank 148 and, through the arm 147 with its fork 150 and the stay 151, the totalizer 4 is turned into subtraction position, arrow SUB 7. The holder 155 is turned clockwise or in the direction of the arrow SUB 7 by the stay 151 while the holder 154 is retained by the rivet 157, and so tension is exerted on the spring 156. The total in the totalizer 4 is now cancelled by the corresponding cancelling sector 138 and a cancelling gear wheel 248, as will be more fully described with reference to Fig. 22, and the cancelled value is printed by the sectors 1.

When the driving shaft 10 is returned in the direction against the arrow 11 and the total taking key 13 has been positively unlocked, as described, all members of the mechanism are returned into their initial positions by the holder spring 156 and the rocker spring 170. This is shown in Fig. 12 and it will appear that in this position the roller 168 is on a depressed portion of the cam plate 169 and the lug 164 of the rocker 165 is below the rear lug 162 of the T member 160.

In contradistinction to this, in the calculation of minus values under zero and subsequent total taking, the value indicated in complementary form in the totalizer 4 must be withdrawn from the totalizer 4 by additive operation through a cancelling mechanism, in order to print this complementary value as a positive one. This is effected as follows:

In the calculation of minus values the subtraction key 13 is depressed, which key, by means of a projection—not shown—corresponding to the projections 204 and 205, Fig. 15, on the corresponding slide, so controls the T member 160 that its front lug 161 is below the lug 163 of the rocker 165. When the machine is started the totalizer 4 is turned into subtraction position, arrow SUB 7, by the cam plate 169, the roller 168 on the rocker 165, the rocker itself, its lug 163, the front lug 161 of the T member 160, and the forked upper end 150 of the totalizer controlling bellcrank 148. When the totalizer controlling bellcrank 148 is turned in the direction SUB 7, the coupling rod 144 through rivet pins 143 and 146, turns the fork 142 slightly clockwise, that is, in upward direction, about its bearing screw 141. If in the calculation of minus values the capacity of the totalizer 4 is overstepped in negative sense, the coupling frame 47 is turned into the position illustrated in Fig. 14 in the direction of the arrow *a* during the first cycle of the machine, in positive cooperation with the tens shifts from place to place. By the bearing screw 141 which is on the right-hand arm 125 of the coupling frame, the fork 142 is moved in the same direction until finally the prong 172 of the fork is below the lug 174 of the rake 176. When the driving shaft 10 and the totaliser 4 return into their normal positions, the coupling rod 144 turns the fork 142 slightly in anti-clockwise direction about its bearing screw 141 and the prong 172 of the fork is again withdrawn out of reach of the lug 174 on the rake 176. Since at this moment on account of the hook 69 at the rear end of the locking slide 50 being engaged by the notch 67 in the catch 63, Fig. 2, and the lugs 57 and 58 engaging, the bar 60 which locks the operation keys 13 is active and locks the depressed subtraction key 13, the lugs 161 and 163 remain in cooperative position, Fig. 14.

During the subsequent second cycle, the driving shaft 10 is again partly turned in the direction of the arrow 11 for introducing the fugitive 1, and the totalizer 4 is returned into subtraction position through cam plate 169, rocker 165, T member 160, and totalizer controlling bellcrank 148. The coupling rod 144 returns the fork into the position illustrated in Fig. 14 in which its prong 172 is again in the reach of the lug 174 of the rake 176.

During the second cycle, the hook 137 of the canceling sector 138 which is moved in the direction of the arrow 2 engages the tooth 136 of the cancelling pawl 130 and turns this in the direction of the arrow *a*, Fig. 11. Through its lug 129 and the lug 127 of the plate 126, the coupling frame 47 is also turned in the direction *a* and the fork 142 is turned in the direction of the arrow *b* in Fig. 14. The prong 172 of the fork acts on the lug 174 of the rake 176 and turns the rake 176 anti-clockwise against the action of the spring 188 which connects it to the frame 185, and the lug 179 at the rear arm 178 of the rake 176 moves away from the abutment rod 181. The frame 125 partakes in the movement of the rake 176 to which it is connected by the slot 182 and the pin 183. The frame 185 is turned clockwise about the abutment rod 181. These movements of the rake 176 and the frame 185 raise the spring 188 by which they are connected. As soon as the spring 188, has moved beyond the center of the connection 182—183, this being its dead-center position, it acts on the rake 176 in the opposite direction and turns the rake anti-clockwise until the lower lug 180 on its rear arm 178 strikes the abutment rod 181, as shown in Fig. 16. The fork 142 during this operation turns the rake 176 only slightly, that is beyond the dead center position of the spring 188 whereupon the pull of the spring 188 moves the rake 176 and the frame 185 fully into the position shown in Fig. 16. The turning of the frame 185 in upward direction raises the links 191 and 192, Fig. 15, through the rivet pin 190, whereby the arms 195 and 199 to which the links 191 and 192 are pivotally connected on the total and subtotal slides 198 and 201, respectively, are swung clockwise about their fulcrum points 196 and 196*a*.

When the driving shaft 10 returns, the T member 160 is first turned slightly in anti-clockwise direction by links and levers, not shown. The front lug 161 of the T member slides off the lug 163 of the rocker 165 and now the spring 156 of the holders 154 and 155 which has been tensioned as described returns the totalizer 4 and its totalizer controlling bellcrank 148 into their initial positions. The T member 160 is also raised and its front lug 161 slides along the rear face of the lug 163 on the rocker 165, but does not leave the lug 163. A short time before the driving shaft 10 and its driving means return into their initial positions, the elevated portion of the cam plate 169 releases the roller 168 of the rocker 165, whereupon the rocker 165 and the T member 160 return into their initial positions according to Fig. 18 by spring action. At the same time, as described in section 3 "The operation of the locking means for the keys 12 and 13", the notch 68 of the catch 63 releases the hook 69 at the rear end of the locking slide 50, Fig. 3, and its spring 53 turns the coupling frame 47 back into its initial position as shown in Fig. 1, and, through the bearing screw 141 in the right-hand arm 125 of the coupling frame 47, the fork 142 and the coupling rod 144 return into their initial positions, while the rake 176, the frame 185, and the links 191 and 192 with the arms 195 and 199, remain in the positions shown in Fig. 18, that is, are prepared for total or subtotal taking in the additive sense.

When, after the calculation of more minus values the total or subtotal key 13 is depressed for total or subtotal taking, the projection 204 or 205 of the arm 195 or 199, as the case may be, slides past below the finger 171 of the T member 160 and this is not influenced. In consequence, the normal operative connection of the lug 162 at the rear of the T member 160 and the lug 164 of the rocker 165 is conserved, as shown in Fig. 18. The rocker 165 is now turned anti-clockwise by the means described and raises the T member 160 which operates the totalizer controlling bellcrank 148. This, in turn, moves the totalizer 4 into addition position in the direction of the arrow 5 ADD. Total taking is now effected as will be described in section 10, "The cancelling of a value above zero in the totalizer by total or subtotal taking", whereupon the number rollers 42 of the totalizer 4 which, as mentioned, has eleven places, indicated the value "999 999 999 99".

The rake 176, the frame 185, the links 191 and 192, and the arms 195 and 199, are returned into their initial positions, upon the subsequent calculation of positive values by re-overstepping of the zero position in the totalizer 4 in the positive sense, as follows:

If, after minus values have been calculated, one or more values are calculated in the additive sense, and if the zero position is overstepped in the totalizer 4, the coupling frame 47 is moved in the direction of the arrow *a* and into the position in Fig. 19 by the pin 44 on the extra tens-shift member 31 and the end 45 of the arm 46 at the left-hand side of the coupling frame 47 by the tens shift from place to place, while the corresponding number roller 42 passes from "9" to "0". The fork 142 which is moved in the direction of the arrow *b*, and has been turned slightly in anti-clockwise direction by the coupling rod 144 about the bearing pin 141 during the preceding turning of the totalizer 4 into its addition position in the direction of the arrow ADD 5, engages the rear surface of the lug 177 on the rake 176 with its lower prong 173. When the driving shaft 10 is returned, the totalizer 4 is also positively returned into its initial position, and the coupling rod 144 moves the lower prong 173 out of engagement with the lug 177 on the rake 176. A short time after the beginning of the second cycle of the driving shaft 10, the fork 142 is moved in the direction of the arrow *b* and its prong 173 is engaged again with the lug 177 on the rake 176.

The cancelling sector 138 now moves on the coupling frame 47 further in the direction of the arrow *a* and into the position in Fig. 11, through the hook 137 on the cancelling sector 138, the cancelling pawl 130, its lug 129 and the lug 127 on the plate 126. The fork 142 is moved in the direction of the arrow *b* and its prong 173, through the lug 177, turns the rake 176 clockwise about the rod 16. Through the slot-and-rivet connection 182, 183, the frame 185 turns anti-clockwise about the abutment rod 181. The spring 188 which connects the rake 176 and the frame 185, now descends and when it has moved beyond its dead-center position it acts on the rake 176 in clockwise direction again until the lug 179 of the rear arm 178 engages the abutment rod 181, as shown in Fig. 20. Through the rivet 190 in the frame 185 and the links 191, 192, Fig.

15, which now descend the arms 195 and 199 of the total and subtotal slides (198, 201) are moved in the same direction, and the slides 198, 201 are returned into their initial positions in which the projections 204 and 205 of their respective arms are again in reach of the finger 171 on the T member 160.

When the driving shaft 10 is now turned back against the arrow 11, the T member 160 is turned slightly in anti-clockwise direction so that its rear lug 162 slides off the lug 164 of the rocker 165, whereupon the spring 156 on the holders 154 and 155 returns the totalizer 4 and the totalizer controlling bellcrank 148 into the initial positions illustrated in Fig. 12. This causes the T member 160 to descend and the front side of its rear lug 162 to slide along the rear side of the lug 164 on the rocker 165. A short time before the driving shaft 10 returns into its initial position, the roller 168 of the rocker 165 is released by the elevated portion of the cam plate 169 and the rocker 165 is now free to swing back. This is followed by the T member 160, and the notch 68 in the catch 63 releases the hook 69 at the rear end of the locking slide 50, as shown in Fig. 3, so that the coupling frame 47 and the members it actuates are free to return into their initial positions illustrated in Fig. 12.

8. The first shutter arrangement

As already explained, the calculated minus value is indicated as a complementary value by the number rollers 42 of the totalizer 4 if the capacity of the totalizer has been overstepped in the negative sense. This complementary value, however, easily causes errors, for the following reason.

If, by way of example, the totalizer 4 indicates the complementary value "999 996 583 67" and it is not notified that this is a complementary value, it may happen that the operator interrupts the operation of the machine for a longer period and, when resuming it, mistakes the said complementary value for the result of a calculation of several additions, that is, a positive value. To eliminate errors from this source, a shutter G, as best seen in Fig. 17, is operatively connected to the frame 185 for concealing the number rollers 42 of the totalizer 4 when they indicate a complementary value.

The lower end of a connecting link A is slotted longitudinally at B and placed on the rivet 183 by which the rake 176 and the frame 185 are connected, as described. The lower end of the connecting link A is secured by a spring washer C. At its upper end the connecting link A is pivoted about a rivet D on the shorter arm of a bellcrank E which is placed on the totalizer trunnion 153 at the right-hand side of the totalizer controlling bellcrank 148 so that it can swing about the trunnion 153 but is held against axial displacement thereon. A flange F projects to the right from the upper end of the longer arm of the bellcrank E and to this is secured the right-hand end of the shutter G. The left-hand end of the shutter G is secured in similar manner to the upper end of an arm H which is mounted to swing on the left-hand totalizer trunnion 153*a*. A spring K whose rear end is attached to a pin L riveted into the longer arm of the bellcrank E and whose front end is anchored on a pin M secured in the right-hand side plate of the machine pulls the inverted U frame E, G, H anti-clockwise about the trunnions 153 and 153*a* until the longer arm of the bellcrank E is arrested by the pin M, this being the initial position of the shutter G, as shown in Figs. 12, 14, 17 and 20, in which the shutter G lays open the inspection opening N in the cover plate P so that the value indicated by the number rollers 42 of the totalizer 4—this being a positive value—can be read through the inspection opening N. In this normal position of the shutter G, the upper end of the slot B in the connecting link A is on the rivet 183.

8a. The operation of the first shutter arrangement

When the capacity of the totalizer 4 is overstepped negatively, the frame 185, as described in section 7, is thrown into the position in Fig. 18 from its initial position in Fig. 12. In consequence of this movement of the frame 185 in clockwise direction the rivet 183 in the frame traverses an idle path in the slot B in the lower end of the connecting link A and then strikes the upper end of the slot B, raising the connecting link A and through rivet pin D, turning the frame E, G, K clockwise about the trunnions 153 and 153*a* against the action of the spring K. In this position of the frame E, G, H, the shutter G is below the inspection opening N in the cover plate P so that the operator cannot read the complementary value which the number rollers 42 display after the capacity of the totalizer has been overstepped negatively. At the same time, he is warned that he has negatively overstepped the capacity of the totalizer 4, that is, that there is a negative balance whose amount he can print by total or sub-total taking.

Preferably the outer surface of the shutter G is painted in a color strikingly different from that of the top plate P.

8b. The second shutter arrangement

Referring now to Fig. 27, the shutter G is a U-shaped member with lugs at both ends, and screws 302 secure the lugs to the arm H at the left and to a bellcrank 300 at the right. At its lower end, the bellcrank 300 has a hook 301 which engages over the rivet 183 already referred to. The bellcrank 300 corresponds to the bellcrank E and performs at the same time the function of the connecting link A which is pivoted to the shorter arm of this bellcrank E at D. As described, the rivet 183 operatively connects the rake 176 and the frame 185 when the capacity of the totalizer 4 is understepped. When the capacity is understepped, and the frame 185 is turned clockwise, the bellcrank 300 is positively turned clockwise about the right-hand trunnion 153 and moves the shutter G so that it conceals the number rollers 42 of the totalizer 4. Connecting the shutter G to the arm H and the bellcrank 300 by the screws 302 facilitates the assembling as compared with the flanges H of the first shutter arrangement. In addition, the rivet 183 and the bellcrank 300 are connected positively and without slack so that the spring K of the first arrangement can be dispensed with.

8c. The third shutter arrangement

If the operator desires to calculate further minus values after the capacity has been understepped and if he desires to inspect the complementary value on the number rollers 42 of the totalizer 4 which is concealed by the shutter G when the capacity is understepped, the shutter G is fulcrumed on the bellcrank 300 and the arm H and is equipped with a handle 306 for

withdrawing it to expose the number rollers 42 with the complementary value, as will now be described with reference to Figs. 28 to 30.

The shutter G is U-shaped as in fig. 27 but instead of being held by the screws 302, this shutter is fulcrumed about screws 303 on the bellcrank 300 and the arm H. A spring 304 by which the shutter G is connected to the bellcrank 300, holds the rear edge at the right of the shutter G against an abutment 305 on the bellcrank 300. This is the normal position of the shutter G, as shown in fig. 28 and when the bellcrank 300 is turned clockwise by the rivet 183 the shutter G is below the inspection opening N, fig. 29. A handle 306 is secured on the shutter G and projects through a slot 307 in the cover plate P. If the operator in case he calculates further minus values, desires to inspect the complementary value on the number rollers 42 of the totalizer 4, he lays free the inspection opening N by pulling the handle 306 to the front, as shown in fig. 30. The spring 304 moves with the shutter G and when it has overstepped its dead center position turns the shutter G anti-clockwise until the handle 306 bears against the front edge of the slot 307 and the shutter G remains in the position fig. 30 in which the number rollers 42 of the totalizer 4 can be observed through the opening N in the cover plate P. To return the shutter G into its initial position, fig. 28, from the position in fig. 30 if the negative value is overstepped by a higher positive value, the bellcrank 300 is turned anti-clockwise. As the handle 306 is retained by the front edge of the slot 307 the shutter G turns clockwise and when the spring 304 has moved beyond its dead center it again moves the shutter into contact with the abutment 305 and the parts are now again in the position fig. 28 in which the shutter G exposes the inspection opening N in the cover plate P, and the newly calculated positive value.

9. The cancelling mechanism

When a total or subtotal is taken an amount which has been indicated as a positive one in the totalizer 4, is withdrawn from the totalizer 4 by cancelling the totalizer 4 by turning back its number rollers 42, and the value is printed. In order to be able to also print in positive form a value which has been indicated by the totalizer 4 as a complementary one when total and subtotal taking, the number rollers 42 of the totalizer 4 must be cancelled by turning in the opposite direction, i. e., to "9". For this purpose, two cancelling mechanisms are provided, as will now be described.

As mentioned, and best seen in figs. 21 and 22, the driving wheels 8 of the totalizer 4 are mounted on a shaft 207. The shaft 207, as shown at the center of fig. 22, has a semi-cylindrical groove 208 in which is inserted a rotary wedge 209. The wedge 209 is shown, broken away, at the left in fig. 22. A tooth 211 projects inwardly from the boss 210 of each driving wheel 8 and engages in a space 213 defined by a pair of flanges 212 on the shaft 207. The wheels 8 are so positioned on the flanges 212 that the ends 214 of their bosses 210 extend through half the width of each flange. In this manner, all wheels 8 are mounted side by side on the flanges 212 with their teeth 211 engaging in the spaces 213 between the flanges.

Similarly, the driving wheels 6 of the totalizer 4 are arranged on their shaft 215, with a groove 216 in the shaft, and a rotary wedge 217 in the groove 216. Teeth 218 projecting from the boss of each wheel 6 project into spaces 220 between flanges 219 of the shaft 215 on which the bosses of the wheels 6 are mounted in the same manner as the bosses of the wheels 8 are on the flanges 212 of their shaft 207. The shafts 207 and 215 are so arranged with respect to each other that their grooves 208 and 216 are pitched at an angle of 30 degs. as shown in figs. 24 and 25. The teeth 211 and 218 in the bosses of the respective wheels 8 and 6, however, are in the same angular position for both shafts 207 and 215.

The rotary wedges 209 and 217 are flattened at 221 and 222, respectively, and are so positioned in their normal or initial positions that their flat surfaces 221 and 222 allow the teeth 211 and 218 of the corresponding wheels 8 and 6 to move freely. The left-hand end 235 and 236 of the respective wedges 209 and 217 are fully cylindrical heads. Grooves 223 and 224 are made in the wedges 209 and 217 between the heads 235 and 236 and the flat faces 221 and 222, preferably at 30 degs. to the adjacent face, and from each groove 223 and 224 projects a point 225 and 226, respectively, which points in the normal positions of the wedges 209 and 217 engage in slots 227 and 228 in the perimeters of holes 230 and 231 in the left-hand end plate 229 of the totalizer 4. At their right-hand ends, the wedges 209 and 217 are again set off in parallel relation to their grooves 223 and 224. In this manner, the wedges 209 and 217, together with their shafts 207 and 215, can rotate in holes 232 and 233 in the intermediate plate 234 which is positioned at the right-hand side of the number rollers 42 without jamming as the wedges 209 and 217 rotate with their shafts 207 and 215.

The heads 235 and 236 of the wedges 209 and 217 are cylinders, as mentioned, and project beyond the left-hand side plate 229 of the totalizer 4. Their free ends are notched at 239 and 240, respectively and the left-hand end of a coiled spring 237 is inserted in the notch 239, a second coiled spring 238 being arranged similarly with respect to the notch 240. The right-hand ends of the springs 237 and 238 engage, respectively, in holes 241 and 242 in the left-hand ends of the shafts 207 and 215. The reaction of the springs 237 and 238 holds the points 225 and 226 securely in their slots 227 and 228 in the left-hand side plate 29 of the totalizer 4 in the initial positions of the wedges 209 and 217.

The wedges 209 and 217 are held against axial displacement by the inner surface 245 of a spectacle plate 243 which has a pair of eyes at its ends and is U-shaped. The eyes are placed on the left-hand ends of the stays 151 and 151*a*, the inner surface 245 of the spectacle plate being held against the ends of the heads 235 and 236 of the wedges 209 and 217 with some play, thus preventing axial displacement of the wedges 209 and 217 and holding the ends of the springs 237 and 238 in their notches 239 and 240 of the heads 235 and 236.

The right-hand end of the shaft 207 extends beyond the intermediate plate 234 and is mounted to rotate in a hole 247 in the right-hand side plate 152 of the totalizer 4. A canceling pinion 248 is keyed on this end of the shaft between the intermediate plate 234 and the right-hand side plate 152 by a key 249 projecting inwardly from the left-hand end of its boss and engaging in the groove 208 in the shaft 207. In a similar manner, the other shaft 215 is extended beyond the intermediate plate 234 and its right-hand

end is mounted to rotate in a hole 247*a* in the right-hand side plate 152, and a second canceling pinion 251 is placed on this shaft and keyed thereon by a key 249*a* engaging in the groove 216 in the shaft 215. Through mechanism, not shown, the canceling sector 138 is shifted on the rods 16 and 17 in the direction of the arrow 253 when the total or subtotal key is operated. The canceling sector 138 whose upper end only is shown in Fig. 22, is made with a rack on its upper edge and a rack 252 is secured to the right-hand side of the cancelling sector 138 at the side of its own rack. When the totalizer 4 is in addition position, the pinion 251, and when it is in subtraction position, the pinion 248 meshes with the racks on the canceling sector 138. It is understood that the canceling sector 138 may be a single member, that is, may be made without the rack 252.

A double-armed lever 256 and a double-armed lever 261 are mounted to swing on the shaft 257 which supports the intermediate wheels 8*a* in the totalizer 4, with their U-shaped bosses embracing each other, as best seen in Fig. 23. This fig. is viewed from the right and Fig. 21 which also shows the double-armed levers 256 and 261, partly in dotted lines, is viewed from the left. A finger 255 on the double-armed lever 256 is arranged to engage in a depression 254 in the perimeter of the boss of the subtraction pinion 248 on the shaft 207. The longer arm 258 of the lever 256 is connected to a spring 259 which is secured to the shorter arm 260 of the lever 261. The pull of the spring 259 forces the finger 255 of the double-armed lever 256 into the depression 254, and the end of the longer arm 262 of the lever 261 into a depression 263 in the boss of the addition pinion 251. This holds the two pinions and their shafts 207 and 215 against unintentional rotation while at the same time the springs 237 and 238, acting clockwise, hold the wedges 209 and 217 in their normal positions, with their points 225 and 226 engaging in the notches 227 and 229, respectively, in the left-hand side plate 229 of the totalizer 4.

10. The canceling, by total or subtotal taking, of a value above zero in the totalizer

Upon depression, for instance, of the total taking key 13, as described in section 7, the totalizer 4 is thrown into subtraction position in the direction of the arrow 7 SUB, moving the driving wheels 8 of the totalizer 4 into mesh with the racks 3 on the sectors 1. At the same time, the canceling sector 138 is shifted in the direction of the arrow 253 and into mesh with the subtraction pinion 248.

By the operation of the machine the movable rod 17 is shifted transversely in the direction of the arrow 2 and through the slot 139, moves the cancelling sector 138 positively in the same direction and the subtraction pinion 248 is rotated in the direction of the arrow *c*. The finger 255 of the double-armed lever 256 is pushed out of the recess 254 in the boss of the pinion against the spring 259. The subtraction pinion 248 turns the shaft 207 in the same direction *c* by its wedge or key 249. The rotary wedge 209 partakes in the rotation of the shaft 207 in whose groove 208 it is placed. The point 225 is forced out of the slot 227 in the left-hand end plate 229 of the totalizer 4 and the rotary wedge 209 is turned anti-clockwise in the groove 208 of the shaft 207. The edge 209*a* where the flat surface 221 intersects the perimeter of the wedge 209, now projects into the path of the teeth 211 of the driving wheels 8 which move in the space 213 between the flanges 212. This is shown in Fig. 24. If during the preceding calculation a set of wheels 8, 8*a*, 8*b*, 42 of a calculating place in the totalizer 4 has remained in zero position the edge 209*a* of the rotary wedge 209 clears the point 211*a* of the tooth 211 in the corresponding driving wheel 8.

The subtraction pinion 248 which is driven by the cancelling sector 138, the shaft 207 and the rotary wedge 209 which are driven positively by the pinion 248, perform only one complete revolution in the direction of the arrow *c* while the cancelling sector 138 performs a complete stroke. During the complete revolution the edge 209*a* of the rotary wedge 209 engages the teeth 211 in the driving wheels 8 which are positioned at various points in the spaces 213 between the flanges 212 in conformity with the status of the several trains of gears in the totalizer 4 and returns these into their initial positions in sequence or at the same time. The driving wheels 8 which are at "9" are engaged first and the driving wheels 8 which have been rotated for few units are engaged later. Overthrowing of the driving wheels 8 beyond their zero position is prevented by their wider tens-shift cams 40 striking the cams 38 on the tens-shift members 31 after the zero position has been reached which members at this moment are locked against shifting.

As the driving wheels 8 mesh with the racks 3 on the sectors 1, driving the wheels 8 during the said cancelling operation cause a shifting of the sectors 1 in the direction of the arrow 2 in conformity with the value of the total, whereby, when the cancelling operation has been completed, those types 9 that have been moved into active position are printed on the paper carried by the cylinder 312 by the printing mechanism of the machine.

When all trains of gears in the totalizer 4 have been returned into the position corresponding to the position "0" of the number wheels 42, the single complete revolution of the subtraction pinion 248, its shaft 207 and its rotary wedge 209 has been completed, and the point 225 of the rotary wedge 209 is again opposite the slot 227 into which it is driven by the spring 237, this being the initial position of the wedge 209. The flat surface 221 of the wedge 209 is now again beyond reach of the teeth 211. The spring 259 returns the finger 255 of the double-armed lever 256 into the recess 254 in the boss of the subtraction pinion 248, Fig. 23, holding the pinion 248 its shaft 207, and its rotary wedge 209 against unintentional rotation.

The transfer of the total value to the paper on the cylinder 312 of the machine is completed by the types 9 and the printing mechanism when the driving shaft 10 has completed its partial rotation through 90 degs. in the direction of the arrow 11. At the same time, the cancelling sector 138 is moved against the arrow 253 in Fig. 22, and unmeshed from the subtraction pinion 248. At the beginning of the subsequent return movement of the driving shaft 10 against the arrow 11 the totalizer 4 is returned into its normal position. At the same time, the cancelling sector 138 and the sectors 1 are returned into their initial positions in the direction against the arrow 2 by the movable rod 17.

In contradistinction, when the subtotal key 13 is depressed, the totalizer 4 is held in its swung-

out position for the duration of a to and fro partial rotation of the driving shaft 10 so that the sectors 1 which are returned as the driving shaft 10 is turned back against the arrow 11, introduce the total value into the totalizer 4 again.

11. The cancelling, by total or subtotal taking, of a value below zero in the totalizer

If a value below zero is in the totalizer 4, the trains of gears at all calculating places in the totalizer 4 have been turned to "9" or beyond, viz. from "9" to "8," "7," etc. at the moment of capacity overstepping in the negative sense. Thereby, the teeth 218 of the driving wheels 6 of the trains of gears that have remained in "9" position also move into the position illustrated in Fig. 25.

When, for instance, the total taking key 13 is depressed, the totalizer 4 is thrown into adding position in the direction of the arrow 5 ADD. This is due to the fact that upon overstepping of the capacity in negative sense the mechanism has been reversed into the position shown in Fig. 18 and consequently the arm 199 by which the species of the totalizer 4 is determined, has been moved into inactive position with respect to the finger 171 on the T member 160. The cancelling sector 138 is now shifted so that its rack 252 meshes with the addition pinion 251 on the shaft 215. The machine now shifts the cancelling sector 138 in the direction of the arrow 2 and the cancelling sectors 138 now moves the pinion 251, its shaft 215 and its rotary wedge 217 through a complete revolution in the direction of the arrow *c* and the arm 262 of the double-armed lever 261 (Fig. 23) is moved out of the recess 263 in the boss of the addition pinion 251. At the beginning of this rotary movement the point 226 of the rotary wedge 217 is moved out of the notch 228 in the end plate 229 against the spring 238 and during the rotary movement the edge 217*a* of the rotary wedge 217 which is turned since the point 226 has come out of the notch 228, engages the teeth 218 in the driving wheels 6 sooner or later in conformity with their setting and turns all trains of gears in the totalizer 4 in the direction corresponding to the sequence of numerals as far as "9" whose tens-shift cams 41 at this moment engage the cams 39 of the tens-shift members 31. Those driving wheels 6 that remain in the "9" position during the calculation, are obviously not influenced. At the end of a complete revolution of the addition pinion 251, its shaft 215 and its rotary wedge 217 the point 226 on the rotary wedge 217 returns into its initial position, as defined by the notch 228, under the action of the spring 238 and the arm 262 of the lever 261 reenters the recess 263 in the boss of the addition pinion 251. During the cancelling the sectors 1 are shifted in the direction of the arrow 2 in Fig. 1 in conformity with the calculated values by the driving wheels 6 in the totalizer 4 and the racks 3 on the sectors. Finally, the total is printed by the hammer 311.

By the aforesaid means of cancelling, the negative value which has been indicated by the number rollers 42 of the totalizer 4 in complementary form, is printed on the paper on the cylinder 312 in positive form.

In order that on the paper a negative total value can be readily distinguished from a positive total value, symbols are printed when total and subtotal taking by the means that will be described in the following section.

12. The symbol printing means for total and subtotal taking

Referring now to Fig. 26, the front ends 265 and 266 of the species-determining arms 195 and 199 on the total slide 201 and on the subtotal slide 198 are arranged in stepped and staggered relation for cooperation with a crooked portion 280 of the subtotal slide 198 and an edge 278 of the total slide 201. When, for instance, the total taking key 13, with its key bar 200, 118, is depressed and there is—positive value in the totalizer 4, the total slide 201 is moved to the rear, as indicated by the arrow 206. The front portions of the arms 195 and 199 are arched in upward direction and a rail 269 is placed to extend transversely through the arched portions above the slides 198 and 201. The rail 269 is supported by a pair of arms whose upper ends are mounted to swing about the rod 16, and a spring 268 tends to move the rail toward the front, that is, clockwise about the rod 16, until a notch 270 at the inner end of a notched arm which extends to the rear from the left-hand arm supporting the rail 269, engages a lug 271 on the arcuate member 273, defining the normal position of the rail 269. The arcuate member 273 is mounted to slide on the rod 16 with a lower slot 276, and on the movable rod 17 with an upper slot 377. A spring 275 is secured to the lower end of the arcuate member 273 and the upper end of the member supports types 272 for the six symbols 272 *a–f*.

The slide 201, in moving to the rear in the direction of the arrow 206, strikes the front edge of the rail 269 with the rear edge of the front end 266 of its arm 199 and turns the rail 269 anti-clockwise about the rod 16. The notch 270 of the rearwardly extending arm clears the lug 271 and places another notch 274 in the arm in the path of the lug 271. For the present the arcuate member 273 cannot follow the pull of its spring 275 as the lower end of its slot 277 is arrested by the rod 17, but when the rod 17 is moved upwards by the drive of the machine, as indicated by the arrow 2, the spring 275 moves the member 273 in the same direction, until its lug 271 is arrested by the notch 274. In this position of the member 273, the clear sign 272*a* is printed. The member 273 is returned into its initial position by the rod 17 descending against the arrow 2.

If there is a negative value in the totalizer 4, the arms 195 and 199 have been reversed, as shown in Fig. 18, at the moment the capacity was overstepped. When in this case the total is taken the edge 278 of the total slide 201 turns the rail 269 slightly so that the notch 279 in its arm arrests the lug 271 of the symbol 272*b* is printed.

If there is a positive value in the totalizer 4 and if it is desired to take a subtotal, the end 265 of the arm 195 on the subtotal slide 198, upon depression of the subtotal key 13, with its key bar 197, 118, swings the rail 269 anti-clockwise so far that all notches in its arm clear the lug 271 and the arcuate member 273 is free to slide upwards for the full length of its lower slot 276, and the subtotal symbol 272*c* is printed.

If there is a negative value in the totalizer 4 and it is desired to take the subtotal, the crooked portion 280 of the subtotal slide 198 swings the rail 269 so far that the notch 281 arrests the lug 271 of the member 273, and the symbol 272*d* is printed.

The symbols 272*e* and 272*f* are printed by means of steps 282 and 283 and a stop hook 316.

Obviously, the rail 269 must be released in this case.

13. A calculation example

Assume that the amount "575" has been introduced in the totalizer 4 additively in the usual manner, and that "752" is to be subtracted from this.

After the calculation of the plus amount "575" the number rollers 42 of the eleven-place totalizer 4 display "000 000 005 75". The amount "752" is introduced in the usual manner by means of the number keys 12, whereby the first three setting wheels 310 of the setting wheel carriage which have been set to "7", "5", and "2" are moved into active position with respect to the sectors 1 at the hundreds, tens and units place. The subtraction key 13 is depressed and its bellcrank 117 through the operating frame 107, Fig. 4, the connecting rod 106, the double-armed lever 93, the spring 97 and the unlocking slide 88, moves the bar 60 and the pusher 59 into position for locking the number and operation keys 12 and 13. The subtraction key 13 is held in depressed position as the bar 60 engages in the notch 119 in the sector-shaped cam of the key. At the same time, depression of the subtraction key 13 breaks the normal operative connection of the rear lug 162 at the lower end of the T member 160 and the rocker lug 164, Fig. 12, by turning the T member 160 anti-clockwise and the negative connection by lugs 161 and 163 is established. The bar 60 and the pusher 59 when moving into their active positions, positively close the contact in the motor circuit. The motor now turns the driving shaft 10 through 90 degs. in the direction of the arrow 11. At the beginning of this operation, the cam plate 169, through the T member 160, the bellcrank 148, and the stay 151 in the totalizer 4, moves this into subtraction position in the direction of the arrow 7 SUB, and the driving wheels 8 in the totalizer 4 mesh with the racks 3 on the sectors 1. The setting wheels 310 on the setting wheel carriage that embody the amount "752" are returned into their zero position, shifting the corresponding sectors 1 in the direction of the arrow 2. There is no obstruction to this shifting of the sectors 1, as at this time the movable rod 17 is also actuated in the direction of the arrow 2 by the mechanism of the machine, and the cancelling sector 138 positively partakes in this movement of the rod 17. When the sectors 1 are shifted the racks 3, through gears 8, 8*a*, 8*b*, turn back in clockwise direction the number rollers 42 which indicate the value "575" at the units, tens and hundreds place, for "7", "5", and "2". At the moment the hundreds number roller 42 is turned from "0" to "9", the tens-shift cam 40 of the driving wheel 8 at the hundreds place prepares a tens shift which is completed by the actuating members 313, 314, and 315, the numeral "1" being transferred to the next higher place by the corresponding tens-shift member 31, the rivet 28 of the pawl 23, the notch 25 in the rack 3, and the rack. As hereby this place is turned from "0" to "9" and the described operations are repeated, all number rollers 42 at the left of the hundreds place are set to "9". As the number roller 42 of the highest place is turned from "0" to "9", the tens-shift cam 40 of the corresponding driving wheel 8 moves into preparation position that tens-shift member 31 which is arranged at the left-hand side of the sector 1 at the highest place. This tens-shift member is moved into the position illustrated in Fig. 2 by the actuating members 313, 314, and 315. Through the pin 44 on the coupling frame 47, the bolt 49, and the locking slide 50, the hook 69 on the slide 50 is engaged by the notch 67 in the catch 63, and the lugs 57 and 58 on the slide 50 and the pusher 59 engage. Due to the turning of the coupling frame 47 in the direction of the arrow *a*, the cancelling pawl 130 is placed in cooperative position with respect to the tooth 137 of the cancelling sector 138, as shown in Fig. 10, and the prong 172 of the fork 142 is presented to the lug 174 of the rake 176.

The hammer mechanism 311 of the machine causes the printing of "752" on the paper on the cylinder 312, and the setting wheel carriage is returned into its normal position. A minus sign is placed behind the printed value to show that it is a subtraction, by the type 272 *f* on the member 273.

When the value "752" and its minus symbol 272 *f* have been printed, the driving shaft 10 has completed its partial rotation through 90 degs. in the direction of the arrow 11. The driving shaft 10 is now returned against the arrow 11 and initially the T member 160 is turned slightly in anti-clockwise direction. This breaks the connection of the lugs 161 and 163 and the spring 156 of the holders 154, 155, returns the totalizer 4 into its initial or non-calculating position, Fig. 12. The movable rod 17 returns the sectors 1, the cancelling sector 138, and the arcuate symbol printing member 273 into their initial positions. A short time before the driving shaft 10 has returned into its initial position, the lug 100 of the cam plate 101 tends to throw out the key locking means, the bar 60 and the pusher 59. This would be effected by the double-armed lever 93, the unlocking slide 88, the arm 84 and the spring 82, but, owing to the yielding connection of the arm 84 and the bar 60 by the spring 82, the locking of the keys by the bar 60 and the pusher 59 is maintained by the interengaging lugs 57 and 58, and the contact in the motor circuit remains closed so that the first cycle is positively followed by the second one, after the driving shaft 10 has completed its return movement.

At the close of the first cycle of the driving shaft 10 the number rollers 42 of the totalizer show the complementary value "999 999 998 23". The fugitive 1 which is still to be subtracted here in the units place, is introduced during the second cycle. At the beginning of the second cycle, the totalizer 4 is thrown into subtraction position, Fig. 14, because the subtraction key remains in its depressed position. When the cancelling sector 138 which is positively moved in the direction of the arrow 2, has moved through four fifths of its total stroke its tooth 137 engages the cancelling pawl 130 which, through plate 126, and 123 and pin 122, throws the coupling frame 47 into the position illustrated in Fig. 11, the rack 3 being operated by the pawl 23 through rivet 28 and slot 25 in the rack. This turns the set of gear wheels at the units place in the totalizer 4 through one unit subtractively. The units place displays "2" and the totalizer 4 displays "999 999 992 22". At the same time, the fork 142 which, being pivoted on the screw 141, partakes in the movement of the coupling frame 47 engages the lug 174 on the rake 176 and throws the reversing means, viz. the rake 176 and the frame 185, into the position illustrated in Fig. 16, and the links 191 and 192, Fig. 15, reverse the arms 195 and 199 on the slides 188 and 201 by which

arms the species of the totalizer 4 and the printing of symbols when total or subtotal taking are determined. The rivet 183 on the frame 185 through the connecting link *a*, moves the shutter G into the position of Fig. 18 in which it is below the inspection opening N in the over plate P. At the same time, through the bolt 49 on the coupling frame 47, the locking of the hook 69 at the end of the locking slide 50 is released by the notch 67 in the catch 63 and engaged by the notch 68, and the lugs 57 and 58 are moved apart, as shown in Fig. 3. The driving shaft 10 now completes its partial rotation through 90 degs. in the direction of the arrow 11 and "00—" is printed on the paper, as normally the two noughts are printed for all cycles of the machine without value calculation, and the minus sign is printed because the subtraction key has been locked in its depressed position. This indicates to the operator that the capacity of the totalizer 4 has been overstepped negatively.

The driving shaft 10 now starts for its return against the arrow 11. The lugs 161 on the T member 160 and 163 on the rocker 165 are disengaged and the totalizer 4 returns into its normal position, Fig. 13. The number rollers 42 of the totalizer 4 which now display the complementary "999 999 998 22" are concealed to the operator by the shutter G. The movable rod 17 descends and returns the arcuate symbol printing member 273 into its initial position, Fig. 26. When the driving shaft 10 has completed its return movement, the key-locking bar 60 and the pusher 59 are returned into their releasing position, as shown in Fig. 1, by the cooperation of the lug 100 on the plate 101, the end 98 of the double-armed lever 93, the unlocking slide 88, the arm 84, the spring 82 and the bracket 80. The subtraction key 13 is now free to return into its normal position and the motor contact is opened. The machine is now ready for the next operation.

If now, by way of example, a value "257" is calculated additively, the capacity of the totalizer 4 is again overstepped in positive sense. In this case, the motor has been started by depressing the addition key 13, and during the first cycle of the machine all number rollers 42 positioned at the left of the number roller 42 at the hundreds place are moved to "0" as the hundreds number roller 42 is turned from "9" to "0" as the consequence of continuous tens shifting. The hook 69 at the locking slide 50 is engaged by the notch 67 in the catch 63 and the key locking means 59 and 60 are held by the lugs 57 and 58. At the close, the totalizer 4 displays "000 000 000 79" During the second cycle, the fugitive 1 is added on the number roller 42 at the lowest calculating place and the arms 195 and 199 are returned into their normal positions through the reversing means, viz. the fork 142, its prong 173, the lug 177 on the rake 176, the frame 185, and the links 191 and 192, Fig. 20. At the same time, the rivet 183 and the connecting link A return the shutter G into its normal position, Fig. 12, in which it exposes the inspection opening N in the cover plate P. At the end of the second cycle, the totalizer 4 displayes the true value "000 000 000 80"

AUGUST FRIEDRICH POTT.

PUBLISHED A. F. POTT Serial No.

MAY 25, 1943. CONTROLLING MECHANISM FOR ACCOUNTING MACHINES 301,289

BY A. P. C. Filed Oct. 25, 1939 15 Sheets-Sheet 1

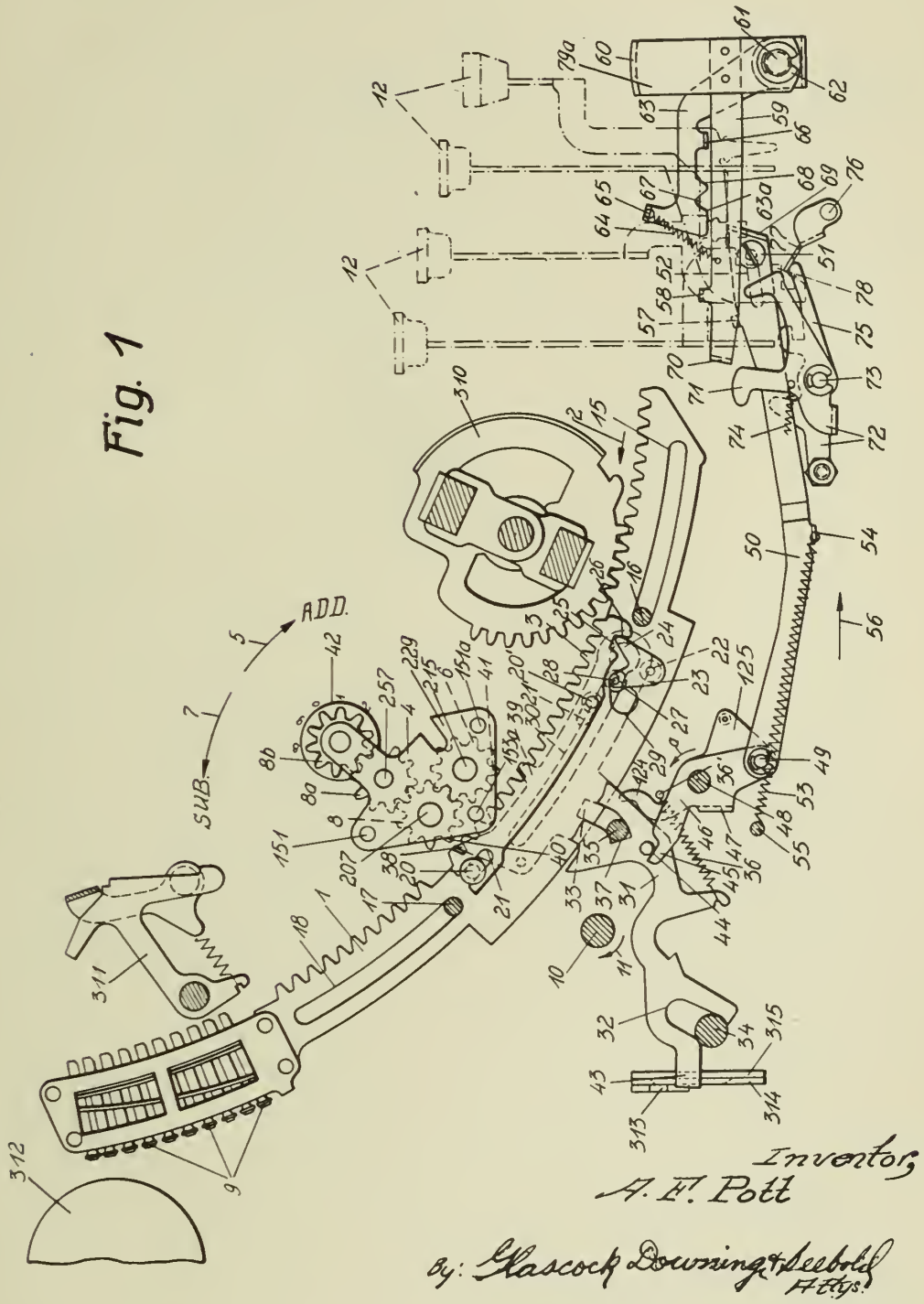

PUBLISHED A. F. POTT Serial No.

MAY 25, 1943. CONTROLLING MECHANISM FOR ACCOUNTING MACHINES 301,289

BY A. P. C. Filed Oct. 25, 1939 15 Sheets-Sheet 2

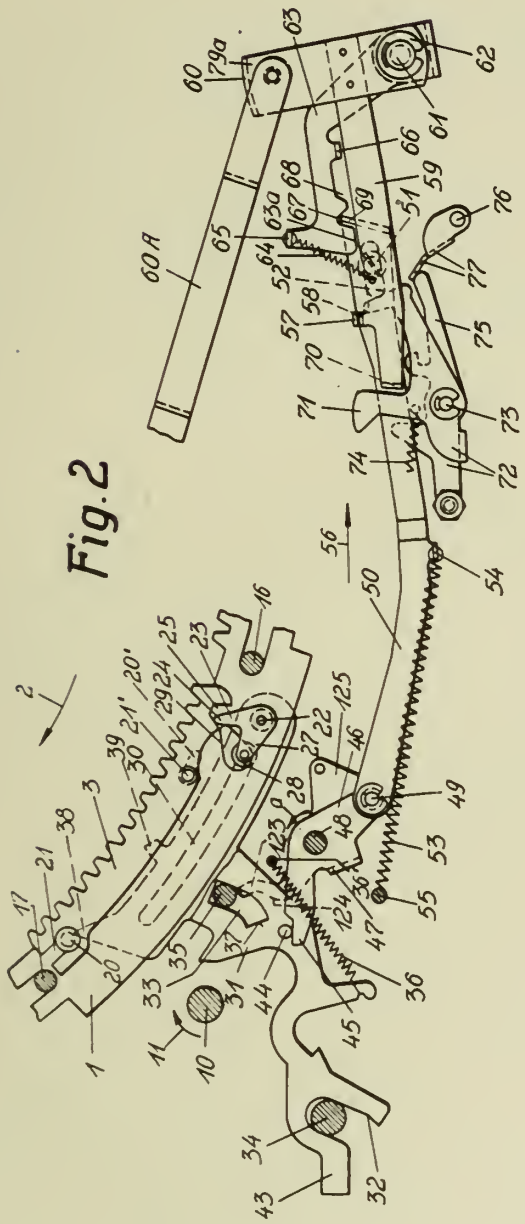

Fig. 2

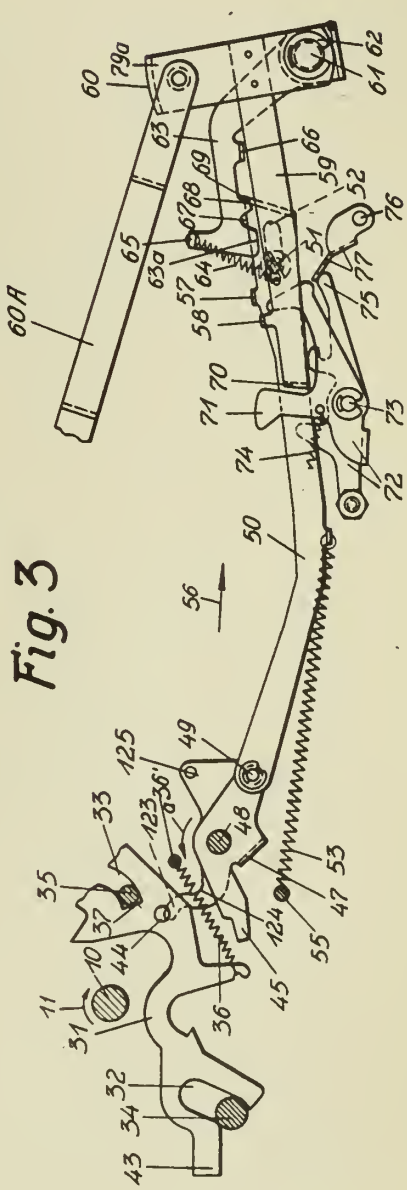

Fig. 3

Inventor,
A. F. Pott

By: Glascock Downing & Seebold
Attys.

PUBLISHED A. F. POTT Serial No.

MAY 25, 1943. CONTROLLING MECHANISM FOR ACCOUNTING MACHINES 301,289

BY A. P. C. Filed Oct. 25, 1939 15 Sheets-Sheet 3

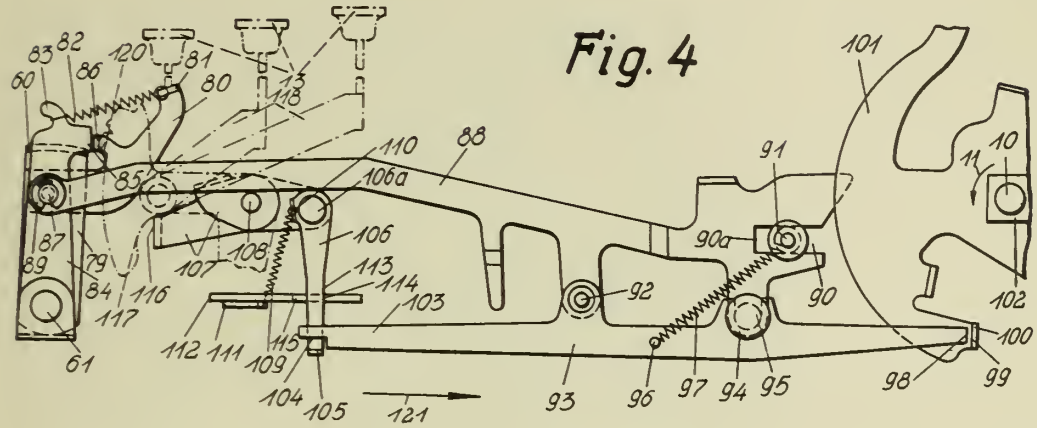

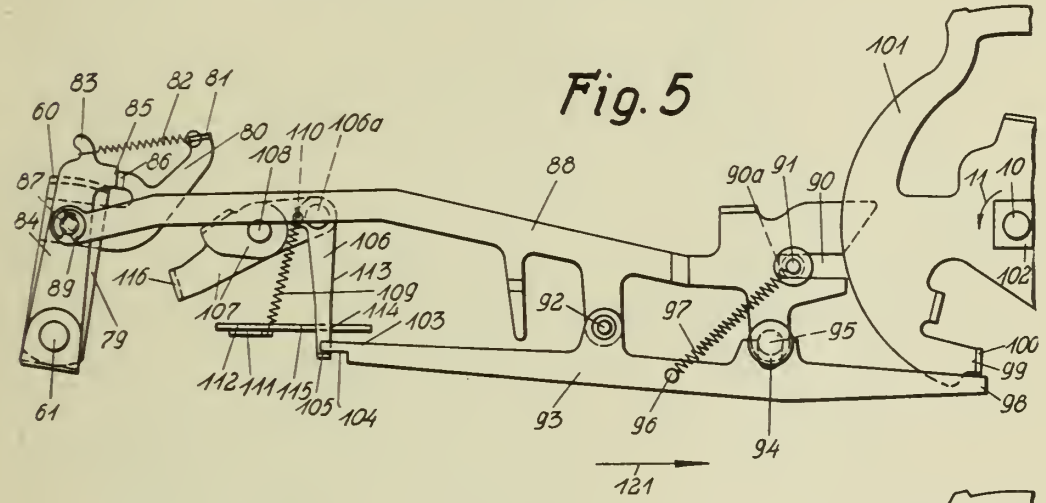

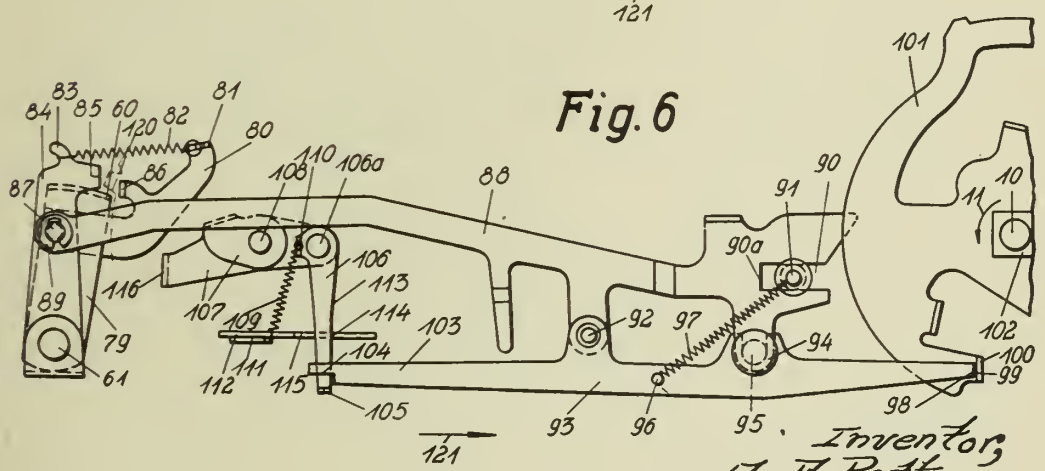

Inventor,
A. F. Pott

By: Glascock Downing & Seebold
Attys.

PUBLISHED A. F. POTT Serial No.

MAY 25, 1943. CONTROLLING MECHANISM FOR ACCOUNTING MACHINES 301,289

BY A. P. C. Filed Oct. 25, 1939 15 Sheets-Sheet 4

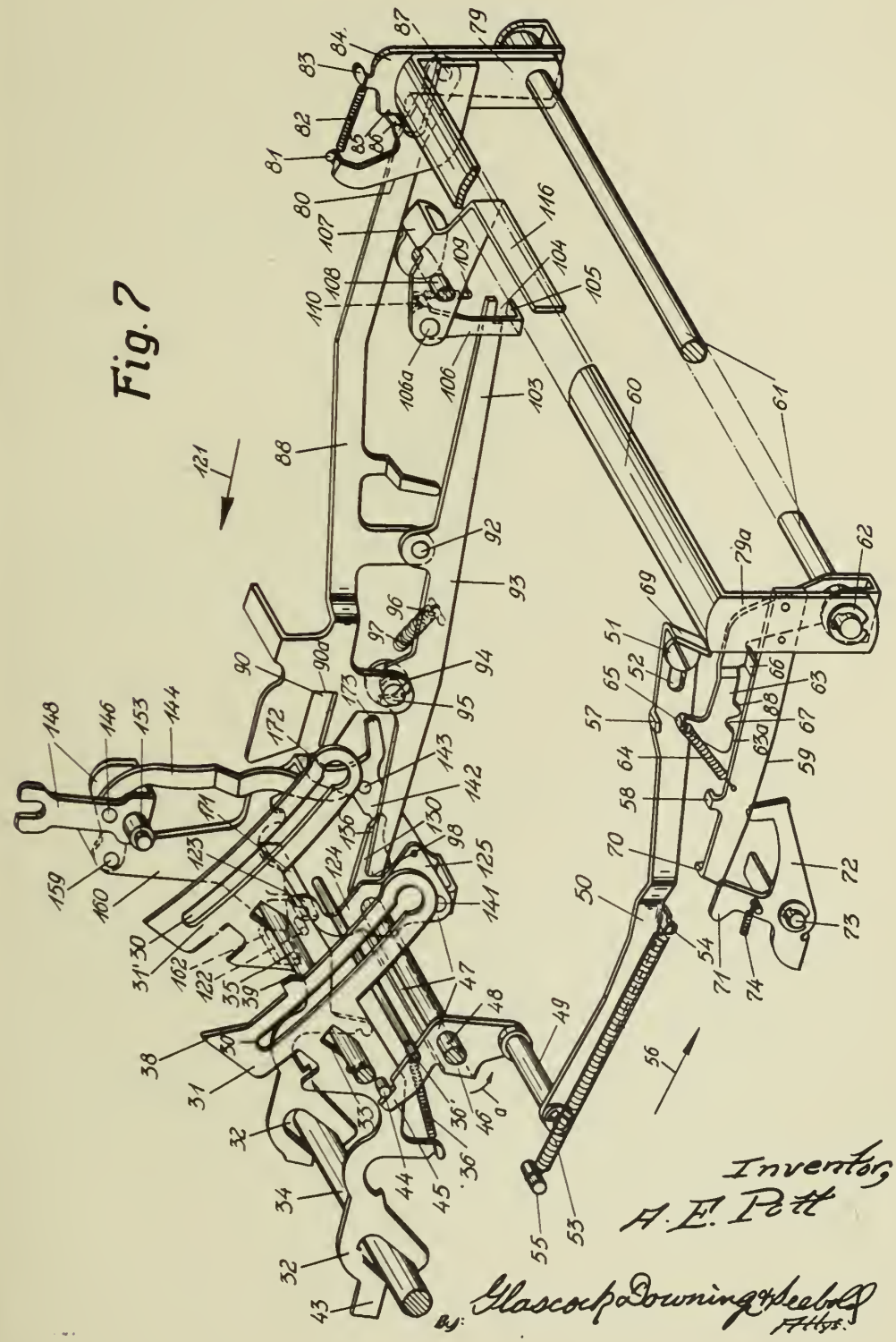

PUBLISHED A. F. POTT Serial No.

MAY 25, 1943. CONTROLLING MECHANISM FOR ACCOUNTING MACHINES 301,289

BY A. P. C. Filed Oct. 25, 1939 15 Sheets-Sheet 5

Fig. 8

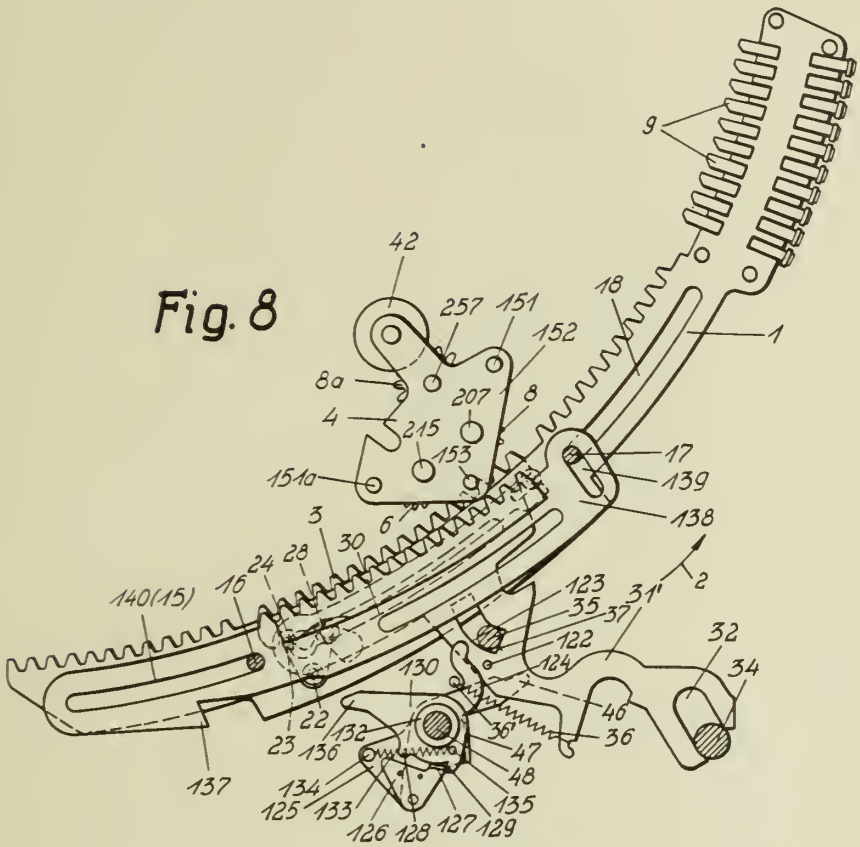

Fig. 9

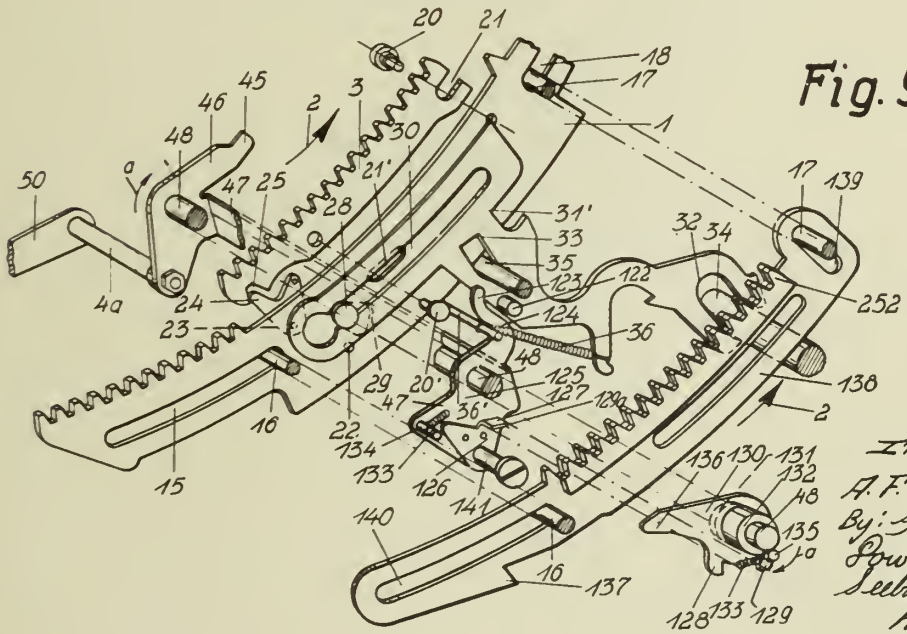

Inventor,
A. F. Pott
By: Glascock Downing & Seebold
Attys.

PUBLISHED A. F. POTT Serial No.

MAY 25, 1943. CONTROLLING MECHANISM FOR ACCOUNTING MACHINES 301,289

BY A. P. C. Filed Oct. 25, 1939 15 Sheets-Sheet 6

Fig. 10

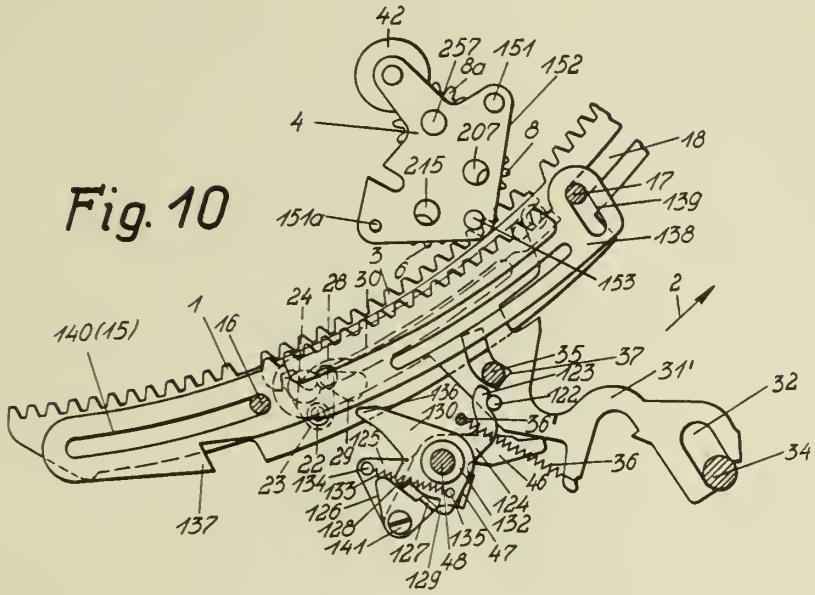

Fig. 11

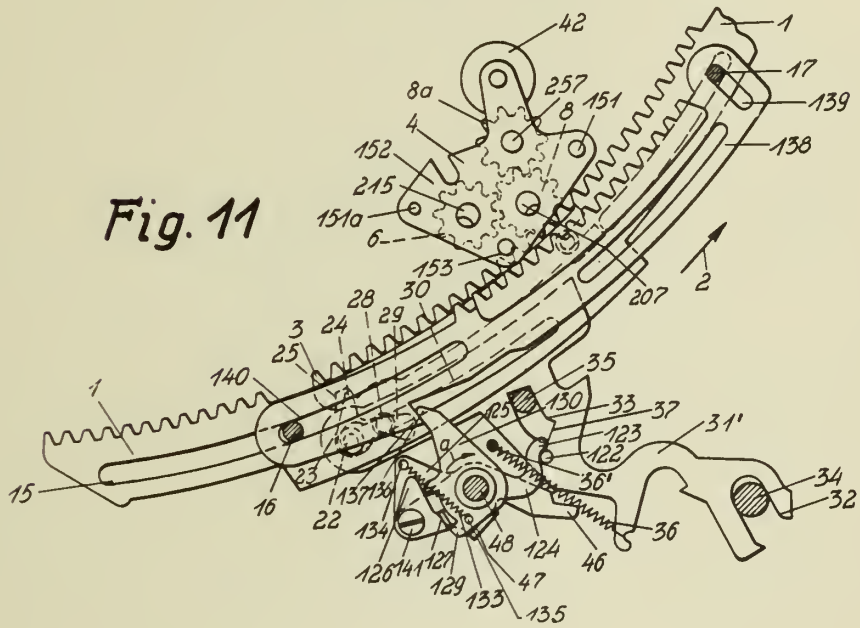

Inventor,
A. F. Pott

By: Glascock Downing & Seebold
Attys.

PUBLISHED A. F. POTT Serial No.

MAY 25, 1943. CONTROLLING MECHANISM FOR ACCOUNTING MACHINES 301,289

BY A. P. C. Filed Oct. 25, 1939 15 Sheets-Sheet 7

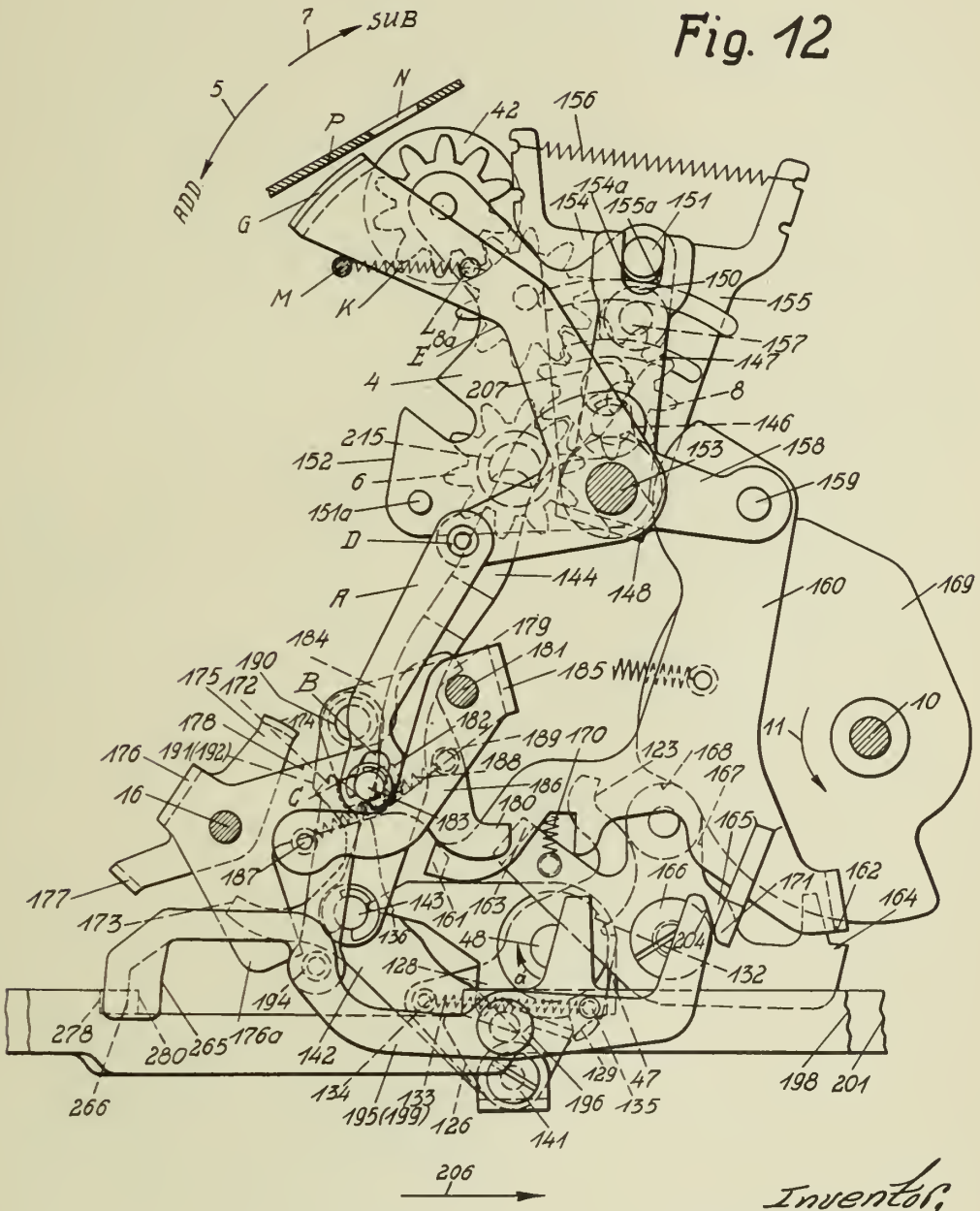

Inventor,
A. F. Pott

By: Glascock Downing & Seebold
Attys.

PUBLISHED A. F. POTT Serial No.

MAY 25, 1943. CONTROLLING MECHANISM FOR ACCOUNTING MACHINES 301,289

BY A. P. C. Filed Oct. 25, 1939 15 Sheets-Sheet 8

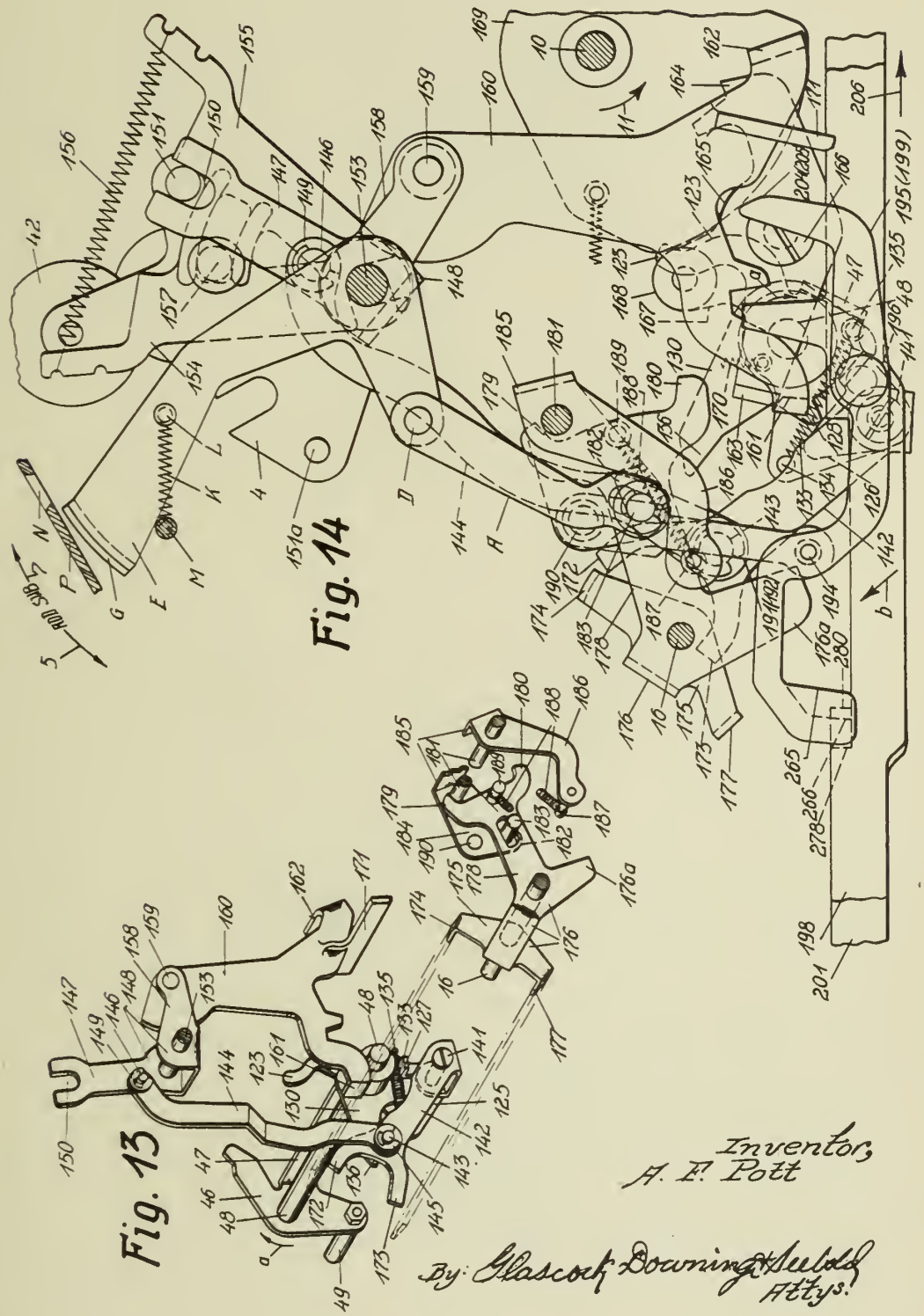

PUBLISHED A. F. POTT Serial No.

MAY 25, 1943. CONTROLLING MECHANISM FOR ACCOUNTING MACHINES 301,289

BY A. P. C. Filed Oct. 25, 1939 15 Sheets-Sheet 9

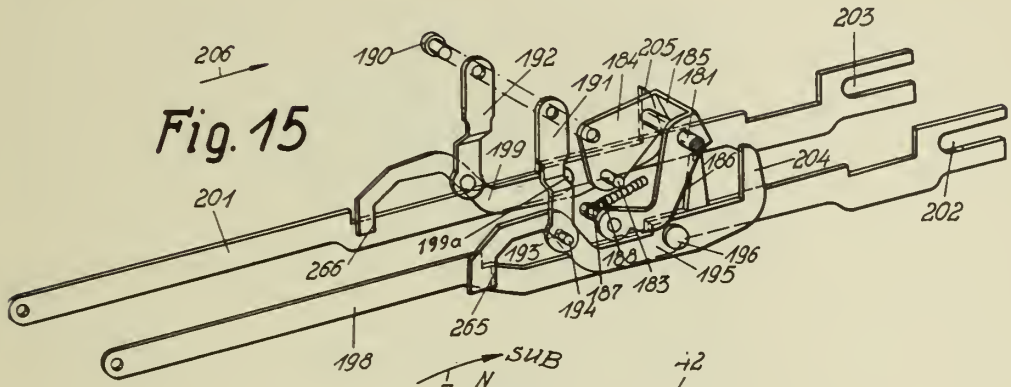

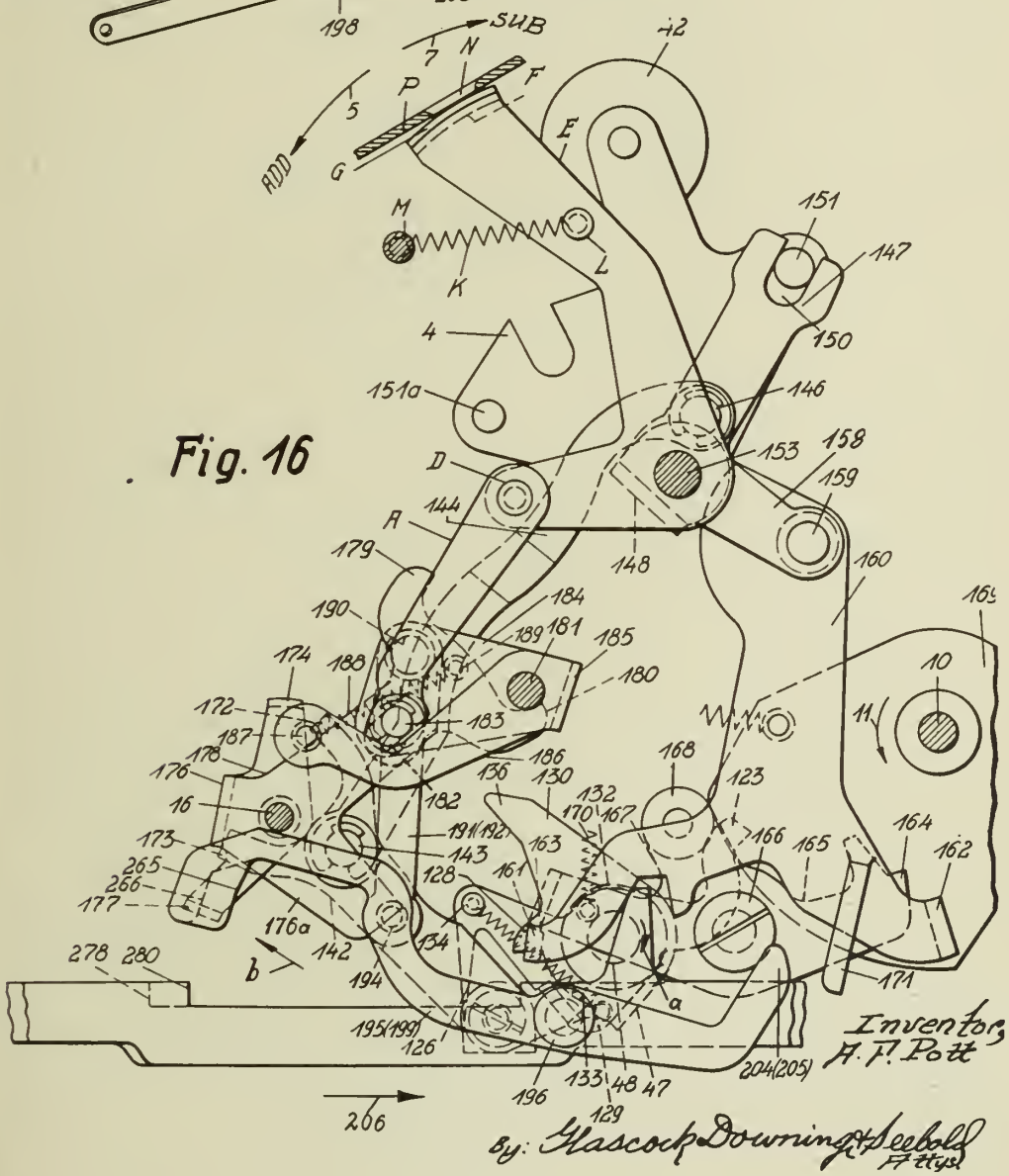

PUBLISHED A. F. POTT Serial No.

MAY 25, 1943. CONTROLLING MECHANISM FOR ACCOUNTING MACHINES 301,289

BY A. P. C. Filed Oct. 25, 1939 15 Sheets-Sheet 10

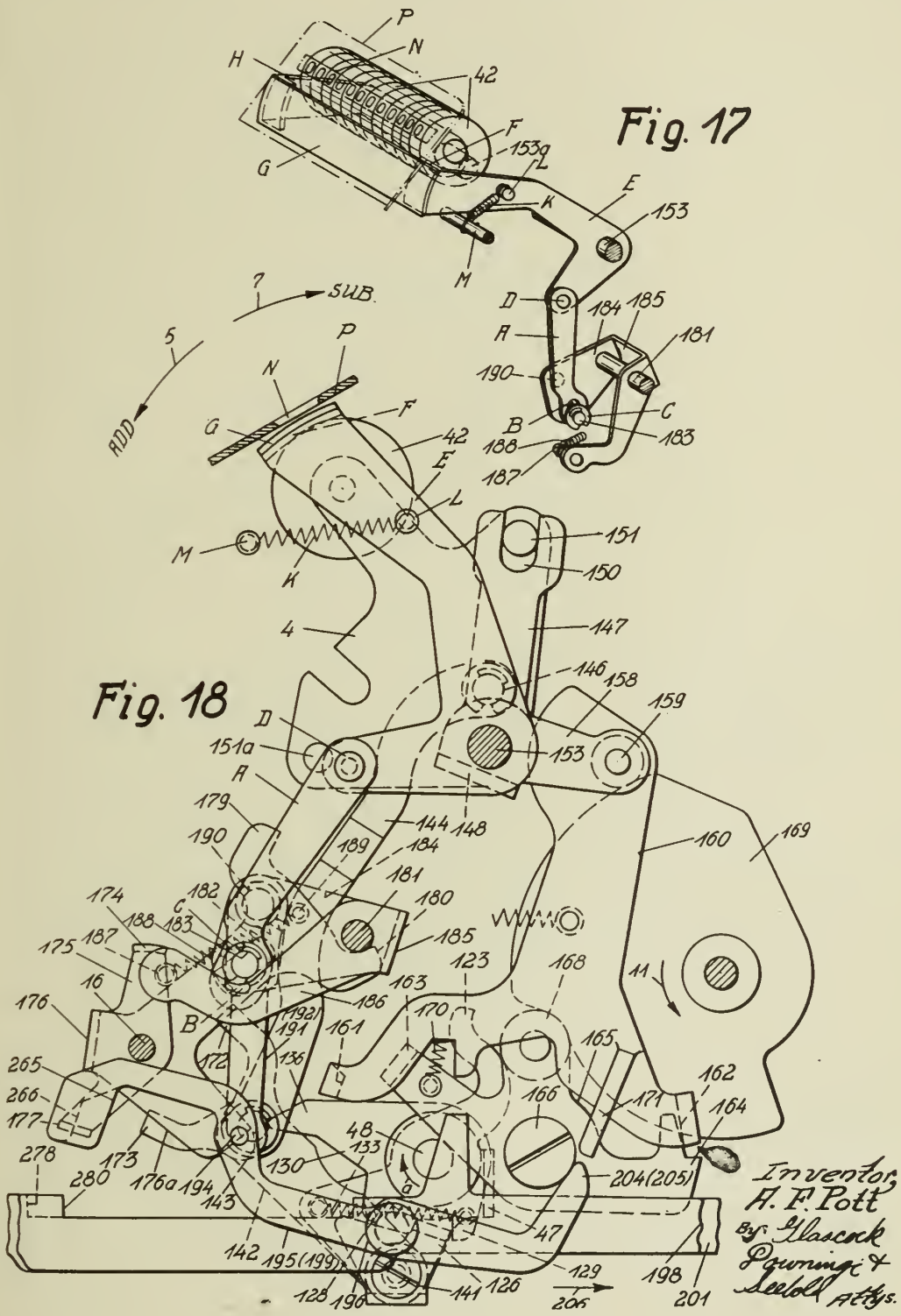

PUBLISHED A. F. POTT Serial No.

MAY 25, 1943. CONTROLLING MECHANISM FOR ACCOUNTING MACHINES 301,289

BY A. P. C. Filed Oct. 25, 1939 15 Sheets-Sheet 11

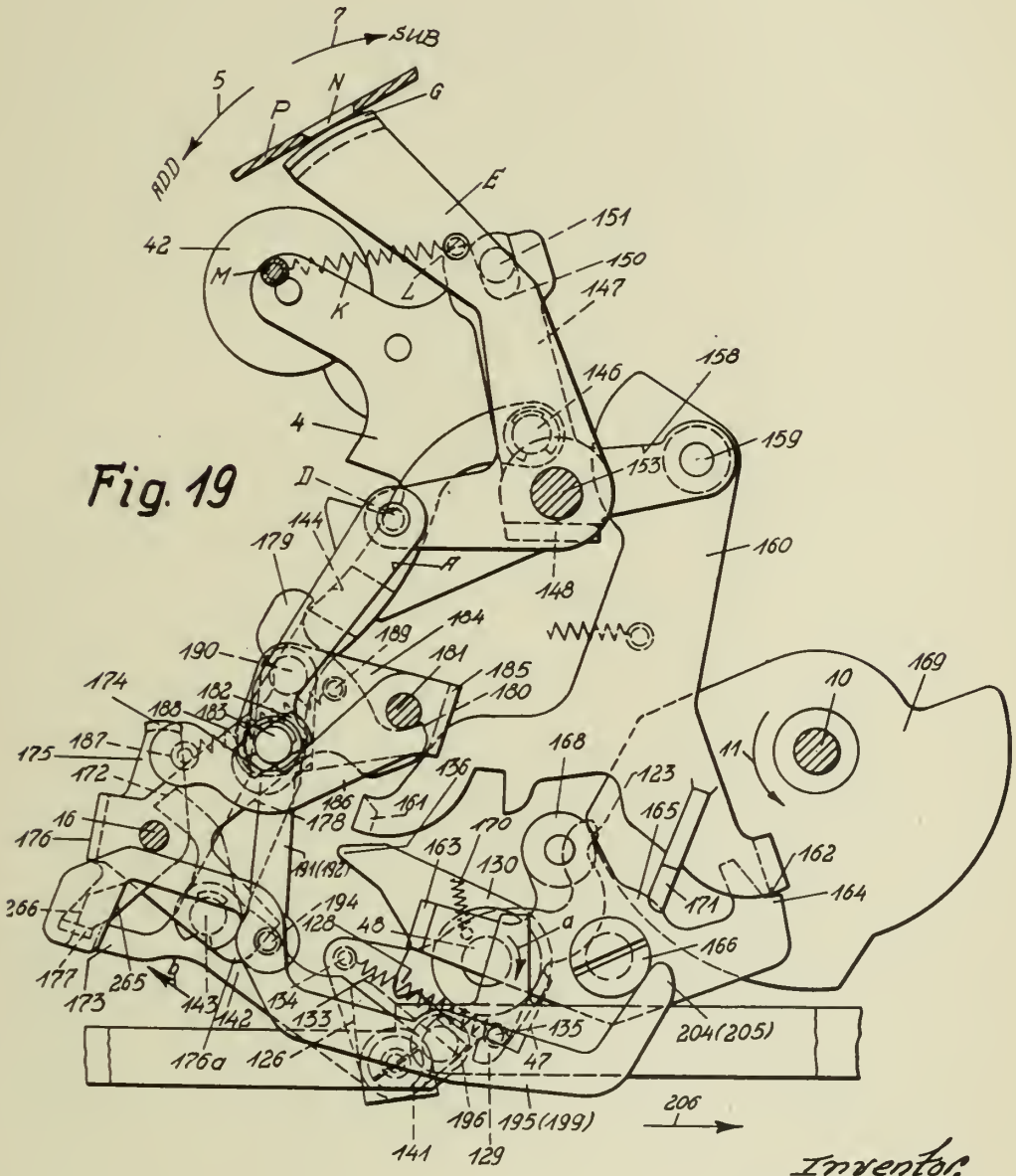

Fig. 19

Inventor,
A. F. Pott

By: Glascock Downing & Seebold
Attys.

PUBLISHED A. F. POTT Serial No.

MAY 25, 1943. CONTROLLING MECHANISM FOR ACCOUNTING MACHINES 301,289

BY A. P. C. Filed Oct. 25, 1939 15 Sheets-Sheet 12

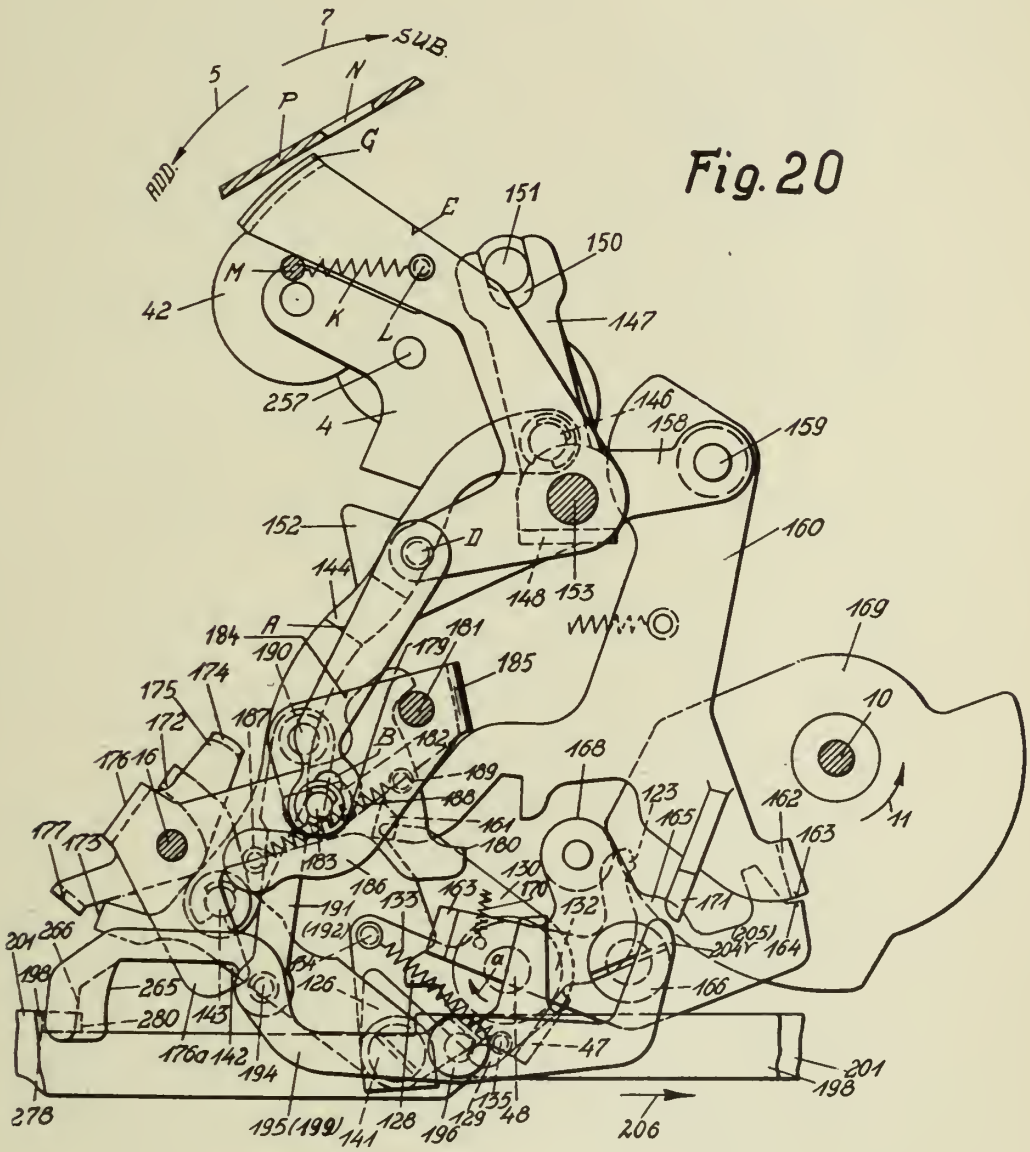

Inventor
A. F. Pott

By: Glascock Downing & Seebold
Attys.

PUBLISHED A. F. POTT Serial No.

MAY 25, 1943. CONTROLLING MECHANISM FOR ACCOUNTING MACHINES 301,289

BY A. P. C. Filed Oct. 25, 1939 15 Sheets-Sheet 13

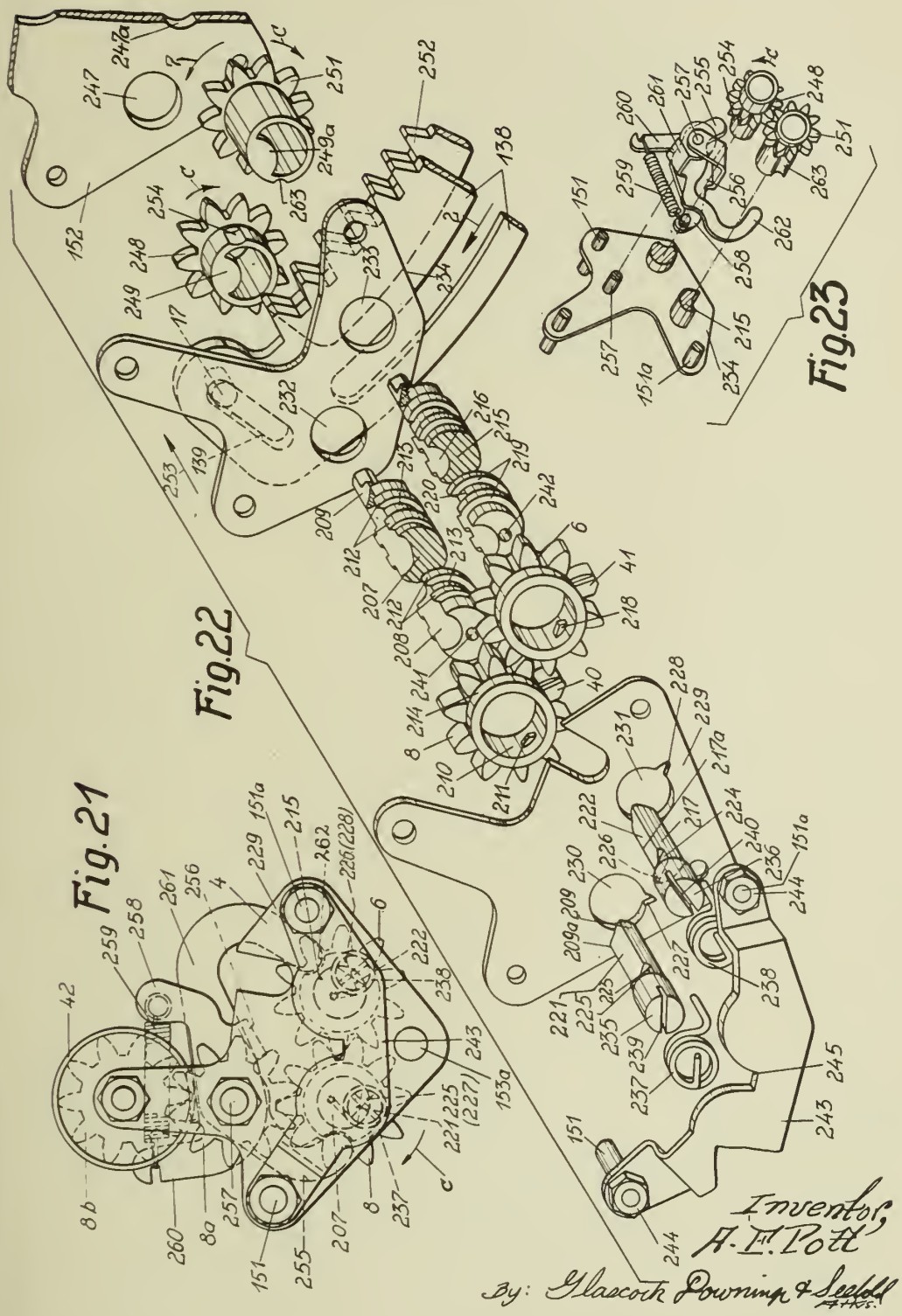

PUBLISHED A. F. POTT Serial No.

MAY 25, 1943. CONTROLLING MECHANISM FOR ACCOUNTING MACHINES 301,289

BY A. P. C. Filed Oct. 25, 1939 15 Sheets-Sheet 14

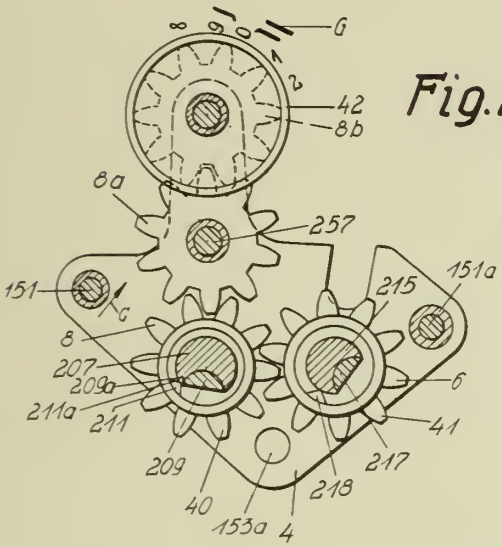

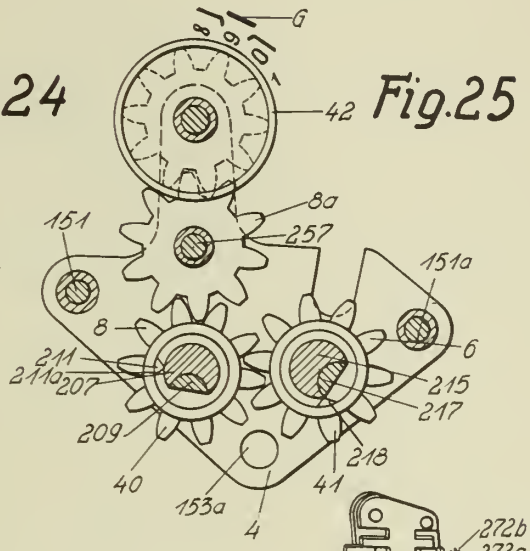

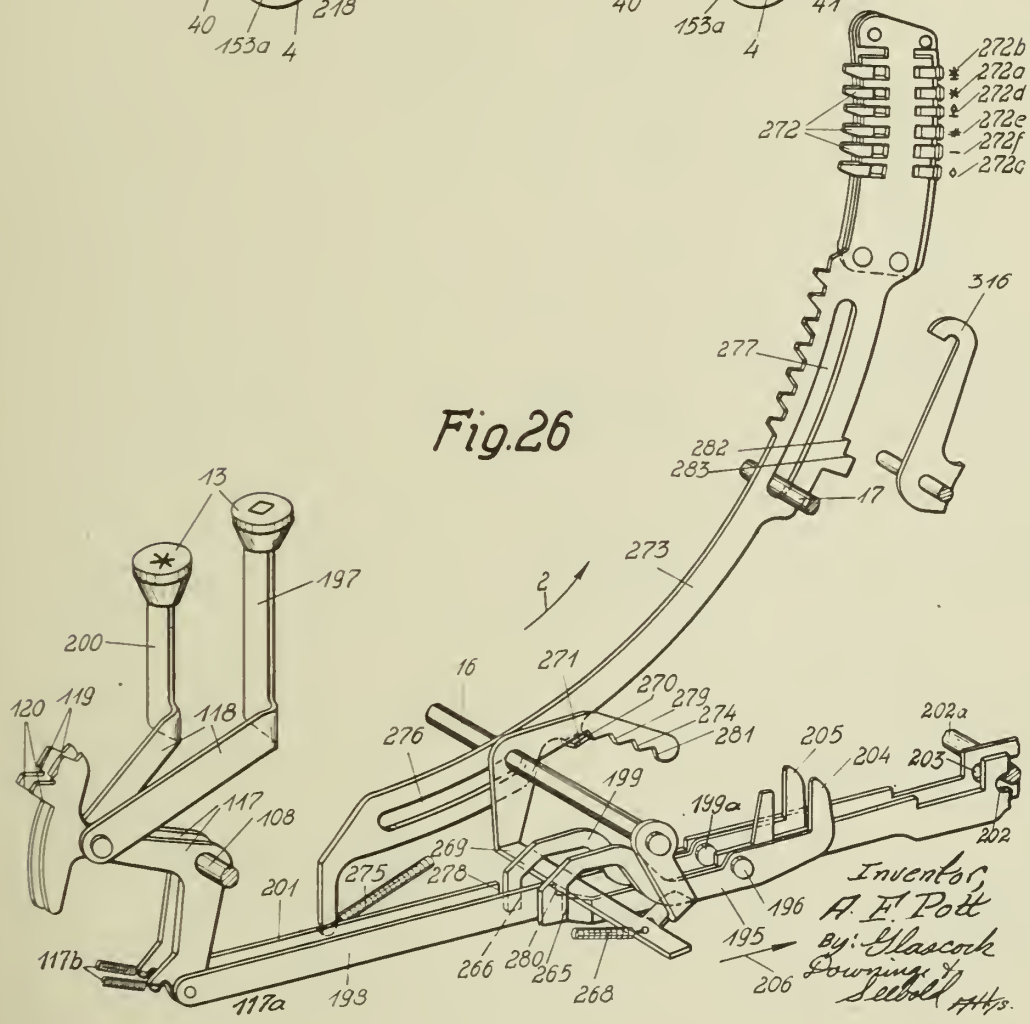

PUBLISHED A. F. POTT Serial No.

MAY 25, 1943. CONTROLLING MECHANISM FOR ACCOUNTING MACHINES 301,289

BY A. P. C. Filed Oct. 25, 1939 15 Sheets-Sheet 15

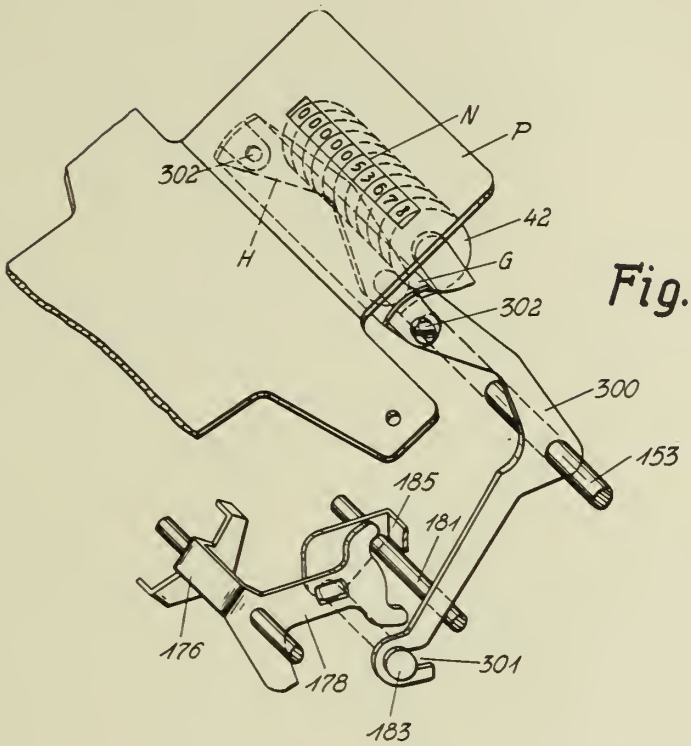

Fig. 27

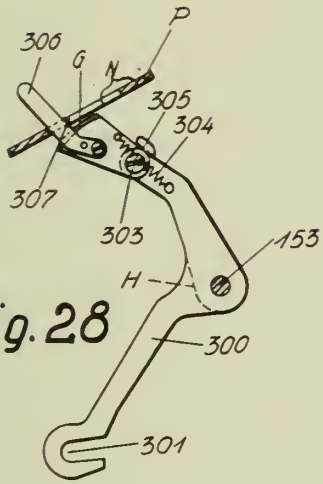

Fig. 28

Fig. 29

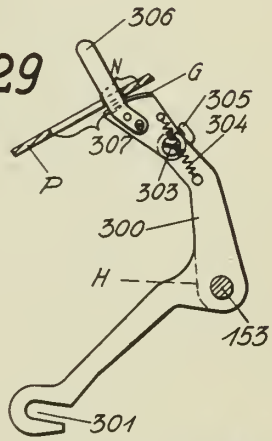

Fig. 30

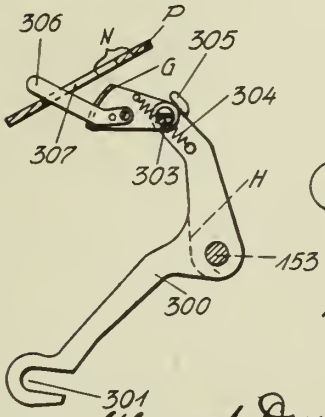

Inventor,
A. F. Pott

By: Glascock Downing & Seebold
Attys.

Published May 25, 1943

Serial No. 303,345

ALIEN PROPERTY CUSTODIAN

PACKING FOR VESSEL PROPELLER SHAFTS

Felix Antonius Huhn, Berlin-Charlottenburg 9, Germany; vested in the Alien Property Custodian

Application filed November 8, 1939

The present invention relates to new and useful improvements in packing for vessel propeller shafts. It is an object of this invention to provide a packing adapted to be advantageously used with supporting bearings, auxiliary thrust bearings, bulkhead stuffing-boxes, shaft couplings, and stuffing boxes of stern tubes.

Up to the present time such parts of vessel propeller shaft systems were packed against oil by means of felt rings and against water by means of cotton cords. However such packing proved to be extremely detrimental to the shaft, owing to said latter being so strongly injured by the felt rings and/or cotton cords that after a certain period of service comparatively deep annular groves are worn out in such shaft. Hereby the moment of resistance of the shaft is materially diminished, bringing about an immediate decrease of the security of the complete engine and vessel unit, what is due to the fact that the vessel propeller shaft represents a vital element of said entire unit. Moreover, the propeller shaft diameter of merchant-ships is exactly prescribed by classification companies, such e. g. as The German Lloyd or The Lloyd's Register, so that the portion of the propeller shaft system having its shaft worn out to a certain degree by felt rings or cotton cords must be replaced under any circumstances.

It is an object of the present invention to remove these drawbacks by providing a stuffing-box arrangement for vessel propeller shafts wherein composite coal rings are used, having their individual segments held together by means of a spring or springs. Such coal ring is preferably arranged in a chamber together with a metal ring encircling and compressing said coal ring. The pressure ring is also formed of several parts and it has an inner conical surface adapted to bear from the outside on a corresponding cone-shaped surface of the coal ring segments, so that they are pressed by the action of said spring or springs towards a radial wall of the chamber. It is often recommendable to arrange the cone-shaped surfaces of said coal ring and of said pressure ring or—if a number of rings are present—at least the cone-shaped surface of one of the coal rings and of the corresponding pressure ring so that the spring or springs will urge said composite coal ring towards that chamber wall towards which it is pressed by the liquid that it is desired to prevent from leaking. In this way the coal ring segments stick by adhesion to a chamber wall, so that an inadmissible overloading of the shaft due to the weight of said coal ring, of its pressure ring and spring is excluded.

For the purpose of facilitating the introduction and assembling of the filling parts into said chamber the inner surface of the pressure ring is preferably formed with an annular projection or rib adapted to enter with lost motion into a correspondingly shaped circular groove or channel provided in the outer peripheral surface of the coal ring.

In accordance with a further improvement of this stuffing-box arrangement, any individual stuffing-box comprises two composite coal rings having between them an annular space communicating by means of a feed duct with an automatically adjusted Stauffer lubricator box. If a water-tight joint has to be obtained, the annular space and the lubricator box should be filled up with grease, whilst for an oil-tight joint they should be filled up with a lubricating paste representing a mixture of soft soap and an appropriate kind of graphite.

With the above and other objects in view, reference is had to the accompanying drawing illustrating an exemplary embodiment of this stuffing-box arrangement.

In the drawing the propeller shaft of a vessel is denoted by reference character 1. It is mounted in a bearing having a body member 18 and it passes through a water-tight wall or bulkhead 17. Said body member 18 has attached thereto on its outer peripheral edge by means of bolts 5 a two-part casing 20. The dash and dotted lines indicate means by which both parts of said casing are united to one another. Said two-part casing has connected thereto as shown in a radial plane a further casing 19 being also divided in axial direction.

The casing 20 comprises an annular chamber 7 and also forms together with casing 19 an annular chamber 6. In each of said chambers there are inserted a metal ring 8 and a composite coal ring 9, 10. The coal ring 9 has a known L-shaped profile having fitted between its links a further coal ring 10. The dimension *a* is smaller than the dimension *b*. In this way any deformation of the composite coal ring is prevented in a manner known per se. Both of the coal rings 9, 10 are divided into an equal number of segments and they are firmly attached to one another, both of said rings being preferably arranged so that their individual segments are respectively overlapping one another in peripheral direction.

The metal ring 8 is also formed of a number

of segments. It bears on the outer side of the L-shaped ring 9 of the composite coal ring 9, 10 its cone-shaped surface 11 being applied to a correspondingly tapering surface of said L-shaped ring 9. The individual segments of the metal ring 8 and of the composite coal ring 9, 10 are held together by means of a coiled spring 12 whereby said composite coal ring is pressed towards the surface 21 or 13 of the chambers 6 and 7 respectively.

An annular space 14 is provided in the two-part casing 20 between both chambers 6 and 7, said space communicating by means of a feed duct 15 with a projecting nipple 16 adapted to accommodate a Stauffer lubricator box.

In the exemplary embodiment represented on the drawing a water-tight joint has to be provided to the left of casing 19 and an oil-tight joint to the right of casing 20. In such case the annular space 14 has to be filled up by means of a Stauffer lubricator box, not shown in the drawing, with a lubricating paste representing a mixture of soft soap and an appropriate kind of graphite. Such lubricating paste is also well adapted to provide for an oil-tight joint only. If a water-tight joint only has to be provided, the annular space 14 has to be filled with grease.

The tapering surfaces of the coal rings and of the pressure rings are arranged in such way that the composite coal ring situated in chamber 6 is pressed towards the surface 21 and the composite coal ring of chamber 7 towards the surface 13.

The pressure rings 8 have annular projections or ribs 25 engaging with lost motion in corresponding grooves or channels 26 of the composite coal rings 9, 10. In this way the introduction and assembling of the filling parts of the chambers is facilitated. In order to prevent a rotary motion of said filling parts there are provided radial stop pins 24.

Both the casings and the pressure rings may be profitably made of a light metal alloy not affected by salt water, such as e. g. silumin. However, they may be also made of any other metal not affected by salt water.

FELIX ANTONIUS HUHN.

PUBLISHED

MAY 25, 1943.

BY A. P. C.

F. A. HUHN

PACKING FOR VESSEL PROPELLER SHAFTS

Filed Nov. 8, 1939

Serial No.

303,345

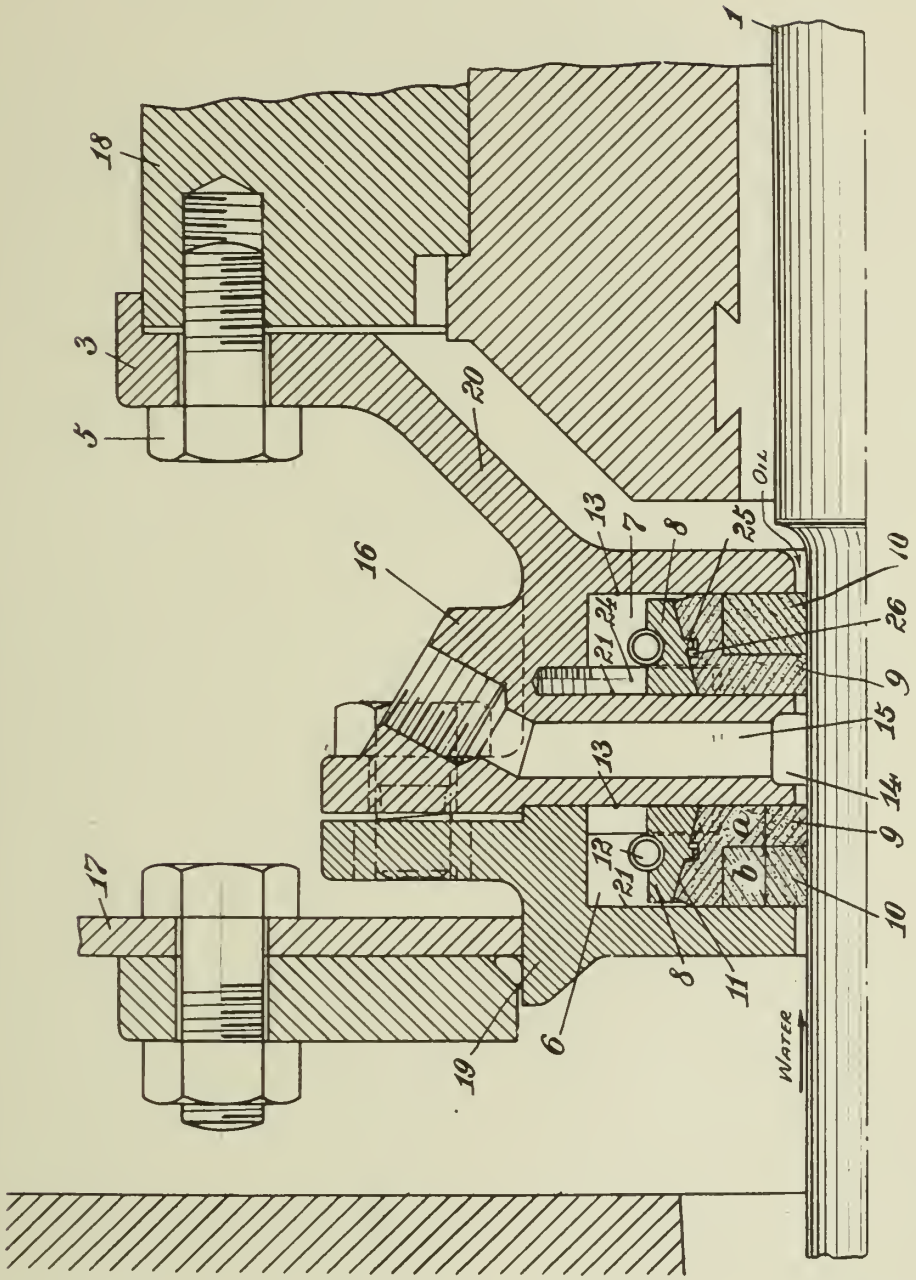

Inventor

Felix Antonius Huhn.

By

Harness, Dickey & Pierce.

Attorneys.

Published May 25, 1943

Serial No. 303,853

ALIEN PROPERTY CUSTODIAN

METHODS AND MEANS FOR PURIFYING SEWAGE AND THE LIKE

August Schreiber, Stahnsdorf/Berlin, Germany; vested in the Alien Property Custodian

Application filed November 10, 1939

The present invention relates to methods and means for purifying sewage, other foul waters and the like, and it is more particularly concerned with improved methods and means for the biological purification of sewage and the like.

It is known to use for the biological purification of sewage so-called trickling or percolating bodies, the liquid being fed to the top of these bodies which are filled with comparatively coarse particles of a suitable filling material or filtering medium such as slag, coke, clinker or other materials. The sewage, while slowly passing through the filling medium, is acted upon by micro-organisms, whereby purification is attained.

It has now been found that the purification may be rendered more efficient and that the cubic capacity of a trickling or percolating body may substantially be incerased, if the filling material of the trickling or percolating body is turned over or repiled.

The invention enabled the use of a substantially finer grade of filling material than was hitherto used for the afore-mentioned purposes.

It is an object of the present invention to purify biologically sewage and the like, by allowing the sewage to trickle or pass slowly through a body or pile of filling material which is turned over or repiled in the course of the purification process.

In a preferred form of the invention, the withdrawing and repiling of the filling material is carried out at intervals and without interrupting the passage of the sewage through the trickling body.

It is a further object of the invention to purify the portion of the filling material withdrawn from the trickling body, before returning it to the latter.

In a preferred modification of the invention, the filling material which is to be turned over, is drawn off at the bottom of the trickling body, and is then returned to the top surface of the body. The respective portion of the filling material may be added to the sewage, and fed to the top surface of the trickling body, together with the sewage. Before returning the filling material, it may be freed from sludge and other impurities, for instance by washing the filling material. Or the sludge may be sucked off while the filling material is being turned over. The washing of the filling material may be carried out in a separate tank or within the apparatus which serves for withdrawing and returning the filling material.

The air required for biological purification may be fed through the trickling body in the direction of sewage or in a counter-stream. The air under pressure of the apparatus serving for turning over the filling material, as well as the air under pressure of the lifting means for the sewage, may be used for this purpose.

The invention is also concerned with improved means for carrying out the improved purification method. These means comprise a filtering or trickling body filled with a suitable filling material, means for feeding the sewage and for discharging the purified sewage from the trickling body, and means for withdrawing the filling material from, and returning it to, the body.

In a preferred form of the improved apparatus, the means for feeding the sewage serve at the time for the distribution of the filling material on the top surface of the body. Said means may be actuated automatically by the sewage, turbine-like distributors being particularly adapted for that purpose.

For the turning over and the repiling of the filling material, mammoth pumps may be used. Other objects of the invention will be apparent as the description proceeds and when taken in conjunction with the accompanying drawings, representing schematically and by way of example preferred embodiments of the invention.

Figure 1 is a longitudinal section through a filtering or trickling body on line ABC of Figure 2.

Figure 2 is a cross-section taken on line EFG of Figure 1.

Figure 3 is a side-view, partly in section on line IK of Figure 2.

Figure 4 is a cross-section taken on line LM of Figure 3.

Figure 5 is a longitudinal section through a modified structure with a two-step trickling body.

Figure 6 shows a further modified structure of the lower part of the trickling or filtering body.

Figure 7 illustrates schematically in an outline-sketch a purification plant of the type described, together with the sewage lifting plant.

Figure 8 shows schematically in an outline-sketch a similar plant as illustrated in Figure 7, however with the interpolation of a mechanical purification.

Figure 9 illustrates the coordination of a plurality of trickling bodies with a common purifying or settling tank for after-treatment.

The purification plant according to Figures 1 to 4 comprises the trickling or filtering body proper 1 and the rinsing pit 2. The wall 4 of the trickling body is provided in its lower portion with gliding faces 5 along which the filling of the trickling or filtering body, hereinafter called filling charge slides down during the turnover or repiling process. The even sliding down of the slag is supported by the guiding element 24. The latter is preferably designed in the shape of a double cone and is so arranged that its corner points 39 are on substantially the same level with the starting points of the gliding faces 5.

The surface of the lower cone preferably extends parallel with the gliding faces. The lower portion of the trickle or filter plant is formed by a funnel 10. Between the latter and the filtering body proper a grate 9 is arranged which is surrounded by a gully 27.

A pipe 25 conducts the sewage to be purified to the upper part of the plant, where it is distributed over the top surface of the filling charge by a rotating distributor 8. The latter is preferably designed in the shape of a rotating sprinkler having several arms differing in length. Then the sewage trickles through the filling charge, and is conducted away by a discharge pipe 36.

A filling charge discharge pipe 17 provided with a valve 18 is connected to the lowermost portion of the funnel 10. During the turnover or repiling step, the filling charge is delivered through pipe 17 to the mammoth pump pool 16, from where it is also fed to the rotating distributor 8 by the mammoth pump 3 through the raising tube 19 of the mammoth pump, said tube being provided with stop valve means 23 with branch line.

The rinsing pit 2 is subdivided in a return pit 14 and a sand-basket 15, from which discharge pipes 30 and 31 lead to an additional purifying or settling tank and the pre-flooder respectively.

For the airing of the purification plant there are provided an upper aeration pipe 34 and a lower conduit 35. For the airing the compressed air of the sewage lifting device or of the filling charge turnover pump may be used. It is also possible to use the air from the mechanical preliminary purification for the airing of the biological trickling or filtering plant. It is advisable to control the air supply of the trickling or filtering body by means of a pressure measuring instrument 32 which, in the form of appliance shown, is connected to the interior of the body at 33 (Figure 3).

If the purifying effect of the filtering body decreases, or if the pressure indicated at the superpressure measuring instrument 32 rises, it is advisable to repile the filling charge. For this purpose, the stop valve 18 of the filling charge pipe 17 is opened, the mammoth pump 3 is connected, and the valves 23 of the raising-tube conduit 19 are opened. The mammoth pump then withdraws filling material from the lower part of the purification plant and returns the withdrawn material through raising-conduit 19 to the upper part of the plant. Part of the sludge adhering to the filling material is brushed of at grate 9 while the filling material moves downwardly through the interior of the grate. This sludge is then washed off by the sewage which flows to the gully 27 passing through the openings of the grate from the interior to the exterior. The sewage and the sludge are then drained off through pipe 36.

The bulk of the filling material to be turned over is withdrawn through pipe 17. However, at the same time, during this working step, individual particles of the filling charge pass through the openings of grate 9 together with the sewage flowing off. It is suitable not to directly conduct, during this period, the sewage from the sewage discharge tube 36 into the sandbag compartment 15 of the rinsing pit, but to conduct it, by appropriate adjustment of the valve, into the return pit 14. The particles of the filling charge separate there and unite in the mammoth pump with the main portion of the filling material, while sludge and sewage, together with the finest particles of the filling material flow over into the sandbag 15.

In the outer pipe of the mammoth pump 3 containing the raising-conduit 19 and the air supplying tube 20 of the mammoth pump, a rinsing pipe 21 may be arranged, having stop valve 22 provided with a protecting basket. By means of this pipe additional rinsing water may be supplied to the lower portion of the mammoth pump in order to make sure that the amount of water required for the conveyance of the filling material is always available. The rinsing tube feeds additional rinsing water, if valve 22 is open, from return pit 14, or it may be directly connected to a pressure line of the sewage supply 25, as indicated in Figure 3 at 40. With the pressure line 40 open, the great super-pressure causes part of the water or sewage in the outer pipe of the mammoth pump to flow through the filling material upwards, bringing about a very efficient additional separation of sludge from the filling material.

Figure 5 shows a trickling or filtering body working on the same principle, namely with a turning over and repiling of the filling charge. This body, however, is adapted to carry out the method in two steps. The respective plant is sub-divided into an upper compartment 80 and a lower compartment 87 by an intermediary bottom 81 provided with valves 86 for the passage of sewage, air and filling material. The bottom 83 of the lower compartment 87 is also provided with valves for the passing through of filling material. At 85 a scraper for the filling charge is indicated. If with this construction the filling charge is to be turned over or repiled, first of all the upper compartment 80, which is most of all silted up, is washed out. To this end, the upper valves 86 of the intermediary bottom 81 are closed, and the filling charge of compartment 80 is washed out by means of compressed air and/or liquid under pressure. The sludge is then drawn off through line 82. Only after this had been done, the filling charge is turned over after the same principle as described in connection with Figures 1 to 4. For this purpose, it is necessary to open the valves of the intermediary bottom 81 as well as the valves in the bottom 83. The valves may be actuated for example by air pressure, or in any other suitable way.

Instead of a plant subdivided into two compartments, a plant subdivided into three or more compartments may be provided, in which would be provided a correspondingly increased number of intermediary bottoms.

Figure 6 illustrates a special design of the lower portion of the trickling or filtering plant. In the place of the mechanically actuated stop valve 18 designated in Figures 1 to 4, a stop device is provided which keeps the lower-most portion 10 of the plant free from filling material during the normal operation of the plant. This device consists of a bell valve 90 which, for example, may be lifted and lowered by compressed air, said bell valve opening, in the lifted position indicated in Figure 6, a passage for the filling material, while, when the valve is in a lowered position, the discharge and turning over conduit 18 for the filling material is shut off. Part 91 corresponds to guiding element 24 of the structure shown in Figures 1 to 4. The design of the lower part of the purification plant according to Figure 6, has the advantage of no unaired

filling material being present in the funnel-like lowermost part, during normal operation of the plant.

In most cases, the sewage arrives on a lower level than that of the inlet into the trickling plant. It is therefore necessary to lift the sewage. In cases like that, a simple and suitable design of the plant is achieved by utilizing for the raising of the sewage the mammoth pump plant for the turning over of the filling charge. By doing this, an additional compressor aggregate is dispensed with. This is schematically indicated in Figure 7. The sewage to be purified flows into a sewage pond 50 and from there into the mammoth pump 51 which lifts it on top of the trickling element 52. The same compressing aggregate drives the mammoth pump 53 for the turning over of the filling charge.

It is also possible to provide for a plurality of smaller plants a common transportable air compressor for the turning over of the filling charge.

In the case of provisional purifying plants, the outer walls of the trickling elements may be made of wooden staffs held together by iron rings. The bottom and the upper wall, as well as the mammoth pump and the machine house, may be made transportable.

In most cases the sewage must be subjected to a mechanical pre-clarification before being biologically purified in a trickling or filtering body. Figure 8 shows schematically an appropriate design of such a plant. The fresh sewage flows into a sewage pond 60 from where it is fed to mammoth pump 61 which lifts the sewage to plant 62 for mechanical pre-purification. From there the mechanically pre-purified sewage is conveyed via conduit 63 to the trickling body 64. The mammoth pump 61 for the unpurified sewage and the mammoth pump 65 for turning over the trickling body 64 are actuated by a common air compressor aggregate.

It is generally advisable to select the size of the trickling body in proportion to the amount of sewage daily to be purified in such a manner that the turning over of the filtering material need be undertaken only after long periods of time, say, for example, every fifth or sixth day. During the step of turning over the filling material, or respectively in the case of the arrangement according to Figure 5 during the turning over and the washing out filling material, the purified sewage leaving the purification plant carries pretty much sludge, which makes it advisable to conduct the sewage during these steps not directly to the pre-flooder but to an additional clarification or settling tank. During the remaining working operations of the purifying plant, however, this is in most cases not necessary. A plant according to the scheme illustrated in Figure 9 will answer this purpose. A number of filtering or trickling plants 71 (four of which are indicated in Figure 7) cooperate with a common settling tank 72 for after-treatment. A plant 73 for mechanical pre-purification is coordinated to each of the trickling bodies. The discharge of each trickling body may be conducted selectively either to the additional clarifying tank 72, or immediately to the pre-flooder. The discharge conduit is connected in each case in a manner such that the discharge from the trickling body just about to be repiled is fed to the additional clarifying tank 72, whereas the discharge of the remaining, normally working trickling bodies, is conducted away without passing the additional clarifying tank. At 70 is indicated schematically engine-house.

Instead of delivering to an additional clarifying tank the portion of the sewage, which accumulates during the turning-over step and thus still carries considerable quantities of sludge, this relatively small portion of the total amount of accumulating purified sewage may be returned to the mechanical pre-clarifier, thus enabling to work without an additional clarifying tank.

Instead of withdrawing and repiling the filling material at intervals the plant may be also operated with continuously carrying through this measure.

Furthermore, the plant may be operated in such a manner as to inundate the entire filtering material, the plant operating then as a regular underwater filter.

Volcanic gravel, light chemical slag, stone splinters and the like may be for example used as filling material. There is, however, a great variety of other suitable materials as is known to the man skilled in the art.

The method of repiling brings about an exceedingly great increase in the output of the purifying plant. While it was hitherto possible to purify in the customary trickling bodies a quantity of sewage per day which corresponded approximately to the simple or twofold volume of the trickling body, it is possible when using the methods of the invention, to purify for example an amount of sewage corresponding to the tenfold volume of the trickling body within a day. Under favourable conditions, it is even possible to increase the quantity of sewage to the thirty-fold volume of the trickling body per day.

The invention allows the use of filling material of considerably smaller pieces, or finer grade as was hitherto used for the purification of sewage. For example, for sewage purifying plants with a volume of 11 to 12 cbm., filling charges have shown to be suitable with which the largest dimension of the single particle was between 5 to 10 mm. However, even finer granulation may be used. Hitherto, fine granulations like that were regarded as unsuitable in sewage purification, because it was experienced with the customary trickling or filtering bodies without the method of turning over and repiling, that when using fine granulations, silting up and processes of decay took place which gradually destroyed the efficiency of the sewage purifying plant.

In order to increase the effect of purification and to facilitate the drawing off of the sludge, additional substances may be admixed with the filling material during the turning over, which cause neutralization, flocculation and/or binding of substances to be removed from the sewage, more particularly of such of the impurities which are present in the sewage in excess. For example, if purifying chemical sewage containing sulfuric acid, it is recommended to add during the turning over to the withdrawn part of the filling material lime-stone splinter which is then fed to the trickling body, when repiling the filling charge and is decomposed in the trickling body, while binding the sulfuric acid. When the turning over is repeated, the decomposed splinter may be replaced by adding a fresh supply of lime-stone splinter.

AUGUST SCHREIBER.

PUBLISHED

MAY 25, 1943.

BY A. P. C.

A. SCHREIBER

METHODS AND MEANS FOR PURIFYING SEWAGE AND THE LIKE

Filed Nov. 10, 1939

Serial No. 303,853

3 Sheets-Sheet 3

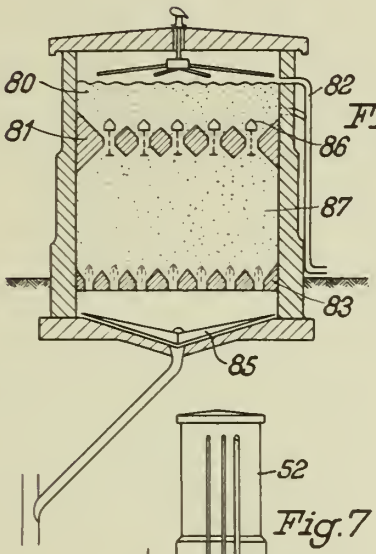

Fig. 5

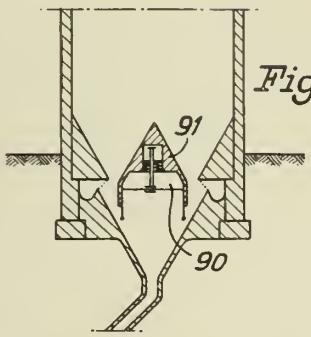

Fig. 6

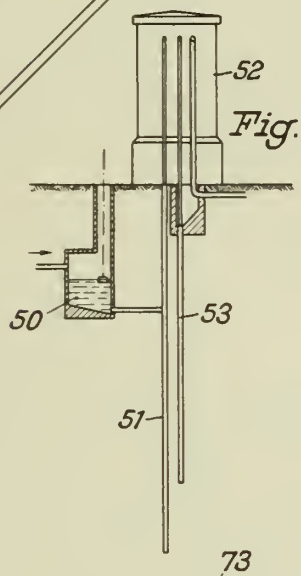

Fig. 7

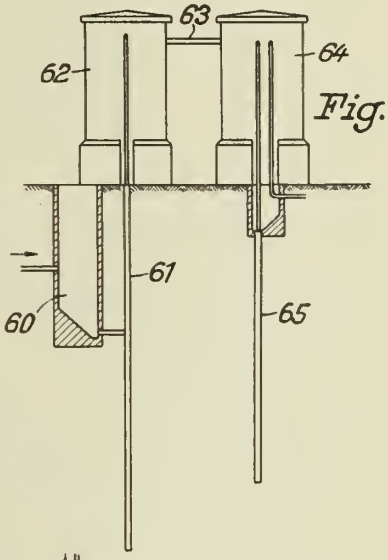

Fig. 8

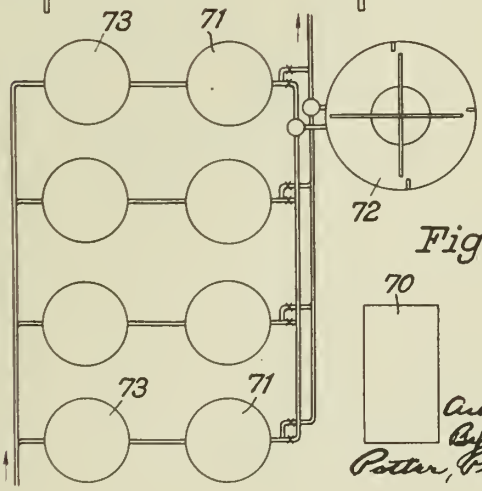

Fig. 9

Inventor:
August Schreiber,
By
Potter, Pierce & Scheffler
Attorneys.

PUBLISHED

MAY 25, 1943.

BY A. P. C.

A. SCHREIBER

METHODS AND MEANS FOR PURIFYING SEWAGE AND THE LIKE

Filed Nov. 10, 1939

Serial No. 303,853

3 Sheets-Sheet 2

Fig. 2
(E-F-G-H)

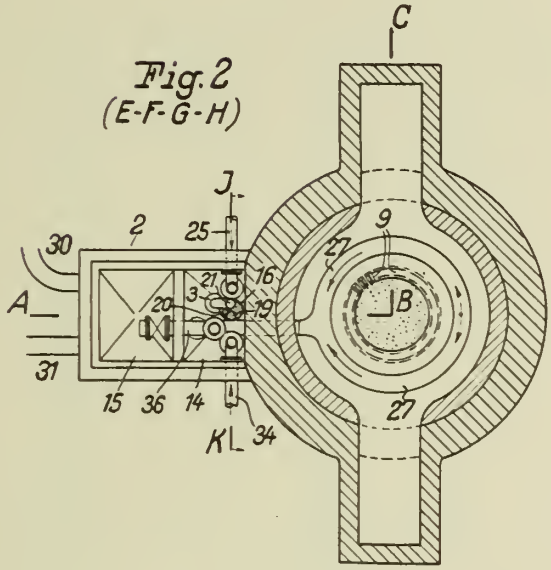

Fig. 4
(L-M)

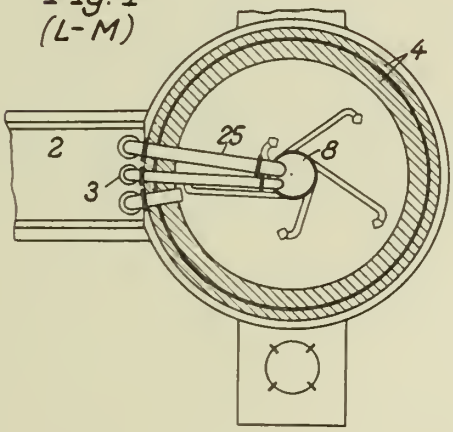

Inventor:
August Schreiber,
By Potter, Pierce & Schaffler,
attorneys.

PUBLISHED

MAY 25, 1943.

BY A. P. C.

A. SCHREIBER

METHODS AND MEANS FOR PURIFYING SEWAGE AND THE LIKE

Filed Nov. 10, 1939

Serial No. 303,853

3 Sheets-Sheet 1

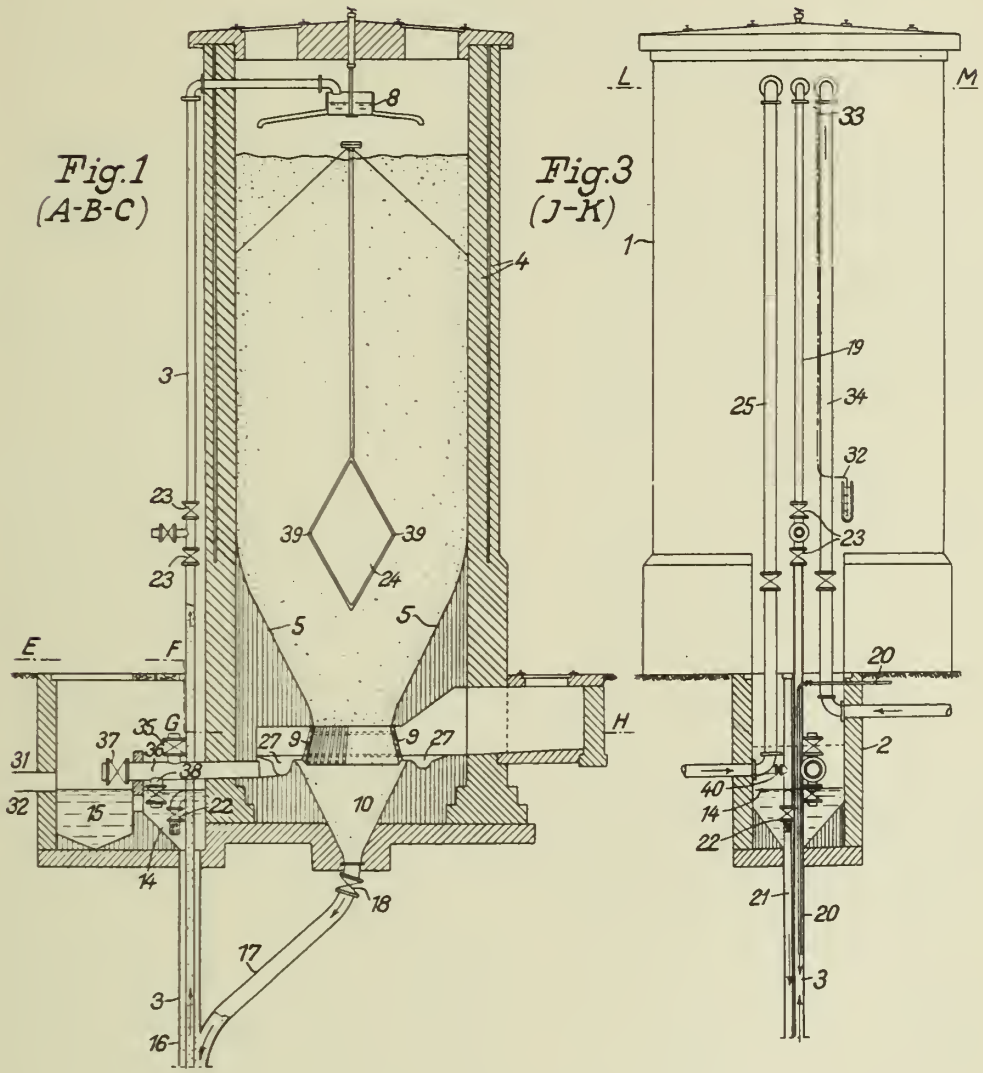

Inventor:
August Schreiber,
By Potter, Pierce & Scheffler,
Attorneys.

Published May 25, 1943

Serial No. 303,897

ALIEN PROPERTY CUSTODIAN

DISINFECTING AGENTS

Günther Endres, Hamburg 39, Germany; vested in the Alien Property Custodian

No Drawing. Application filed November 10, 1939

It is known that all the usual disinfecting agents such as phenols and the like are ineffective when introduced into hydrocarbons or into halogenated hydrocarbons. Thus, in solutions of benzine, carbon-tetrachloride and the like they no longer exhibit a bactericidal action. This disadvantage is particularly noticeable when garments and the like are to be chemically cleaned, because it is not possible simultaneously to disinfect the garments when cleaning them with benzine, carbon-tetrachloride or other fat solvents. A process by which, in addition to the chemical cleanings, the garments and the like are simultaneously disinfected is of great hygienic importance.

It has now been found that disinfecting agents having a very good effect can be obtained by adding a small quantity of an alcohol to an aliphatic hydrocarbon, such as benzine or other fat solvent or to a halogen derivative thereof, such as carbon-tetrachloride or trichlorethylene. The fat solvent may consist also of a mixture of a plurality of halogen derivatives such as for example carbon-tetrachloride and trichlorethylene and the like. One disinfecting agent in accordance with the invention comprises a fat solvent to which a small quantity of an aliphatic alcohol, preferably methyl alcohol, is added. Another disinfecting agent in accordance with the invention comprises a fat solvent to which a small quantity of an unsaturated alcohol is added. A further disinfecting agent in accordance with the invention comprises a fat solvent to which a small quantity of an aromatic alcohol is added.

It has been found that the disinfecting effect can be still further increased when an agent having a bactericidal effect in the presence of water is added in small quantities to the fat solvent in addition to the alcohol preferably methyl alcohol. Thus a small quantity of an alcohol and a small quantity of organic compounds with phenolic hydroxyl-groups can be added to the fat solvent. Also a small quantity of an alcohol and a small quantity of a mercury compound can be added to the fat solvent. Again another disinfecting agent in accordance with the invention comprises a fat solvent to which a small quantity of an alcohol and a small quantity of a quaternary ammonium compound—having bactericidal properties in the presence of water—are added. Again a small quantity of an alcohol and a small quantity of formic acid can be aded to the fat solvent. Under fat solvents also mixtures of fat solvents are understood.

Example 1

Pieces of cotton wool were immersed in bacterial suspensions of staphylococcus aureus and bacterium Coli and after about ¼ hour were removed from the suspension and dried at a temperature of 37° C. The dry wool carrying the germs was then immersed in a disinfecting agent of the present invention. After 30–120 minutes the wool was removed from the solution and incubated in a suitable culture solution. After 48 hours incubation the following results were obtained:

Duration of action	Staphylococcus		*Bacterium coli*	
	30 minutes	120 minutes	30 minutes	120 minutes
(1) Benzine	+	+	+	+
(2) A mixture of benzine and 2% methyl alcohol and 0.2— isopropyl alcohol	—	—	—	—

In this table:
+ = positive growth of bacteria.
— = no growth.

Both kinds of bacteria are, as is well known, not destroyed by benzine while the cultures from a benzine solution which contained an addition of 2% methyl alcohol and 0.2% isopropyl alcohol were totally destroyed. The same results are obtained with a mixture of benzine and 2% methyl alcohol and 1% ethyl alcohol.

Example 2

Duration of action	Staphylococcus, 120 minutes	*Bacterium coli*, 120 minutes
(1) Benzine	+	+
(1a) A mixture of benzine and 2% ethyl alcohol	+	—
(1b) A mixture of benzine, 2% ethyl alcohol and 0,2% sublimate	—	—
(2) Carbon tetrachloride	+	+
(2a) A mixture of carbon tetrachloride and 4% methyl alcohol	+	—
(2b) A mixture of carbon tetrachloride and 0,4% of 2-benzyl-4-chlorophenol	+	+
(2c) A mixture of carbon tetrachloride, 4% methyl alcohol and 0.4% 2-benzyl-4-chlorophenol	—	—
(2d) A mixture of carbon tetrachloride, 4% methyl alcohol and 0,4% quaternary salt	—	—
(2e) A mixture of carbon tetrachloride, 4% methyl alcohol and 0,2% sublimate	—	—

From this table it will be clear that, for exam-

ple, a mixture of carbon tetrachloride and 4% methyl alcohol does not destroy staphylococci after two hours but, on the other hand, completely destroy bacterium Coli. If, however, another disinfecting agent of organic or inorganic origin which is effective in aqueous solution is added to this mixture the staphylococci are also destroyed.

As the quaternary salt for these experiments there was used benzylmethylaminoaceticacid-dodecylamidechlormethylate. Of course any other amines or ammonia compounds having disinfecting properties can be used.

Example 3

Benzine or trichlorethylene to which 2% methyl alcohol and 0.1% formic acid have been added exhibits an excellent bactericidal effect. Staphylococcus aureus and bacterium Coli were completely destroyed be this mixture in one hour using the experimental methods described.

The invention is of considerable practical importance and enables materials to be effectively disinfected while being chemically cleaned so that the transfer of infectious germs is effectively prevented.

GÜNTHER ENDRES.

Published May 25, 1943

Serial No. 303,977

ALIEN PROPERTY CUSTODIAN

DOOR-LATCHES, ESPECIALLY FOR MOTOR VEHICLES

Anton Diemer, Stuttgart, Germany; vested in the Alien Property Custodian

Application filed November 13, 1939

This invention relates to locks or latches, especially for doors of motor vehicles and for other doors which when closed are under spring tension, the bolt of such latches carrying out, in addition to its forward motion, also a transverse one or a cross motion. An object of such double motion is to secure an easy entering of the head of the latch bolt into the striker plate or behind the locking wedge, despite of the door being distorted or being under spring tension when in closed position. This should occur prior to the door being completely introduced into the body frame, so that such doors need not to be slammed. However since with latches of known structure the bolt is performing both these movements simultaneously, the results aimed at are not always or almost not always securely attained. This is due to the fact that especially with bolts having their forward motion depending of spring action only it may occur that the head of the bolt will enter either with its tip only or not sufficiently deep into the striker plate opening or behind the locking wedge, being thereon jammed in the attained position on account of great friction or pressure. In such a condition at the slightest concussion or distortion the door may open again.

The present invention has for its object to remove this drawback, this being achieved by a suitable connection between the door handle and the latch bolt providing for those both movements being carried out consecutively only. In this way when a latch is to be unlocked, the bolt performs at first a cross motion only, whilst it is retracted into the latch casing yet after said cross motion is terminated. In locking operation, on the contrary, the bolt executes first its forward motion, whereafter yet when this latter is terminated, it carries out its cross motion providing for a complementary drawing of the door into the door frame.

With these objects in view, in a preferred embodiment of this invention, I provide a slider between the latch bolt and a lever connected to the door handle, said slider being adapted to bear both on the latch bolt and on the latch casing. When the door handle performs an unlocking movement said slider is first sliding along a wedge surface whereafter yet at the end of said latter, it causes the latch bolt to perform its inward movement. The just mentioned wedge surface may be arranged either on the bolt or on the door casing or on the slider proper.

When this door latch is used with motor vehicles it is necessary that the outer door handle (knob) be able to be moved independently of the inner one, so that e. g. the inner door handle remains stationary when the latch gets open by means of the outer door handle and vice versa. In order that such a mutual independence of both door handles be obtained with the above described new door latch also, I provide, according to a further improved feature of this my invention, between the latch bolt and the displaced door handles or respectively between a slider acting on the latch bolt and said door handles, a swinging lever transferring the motion of the door handle either to the latch bolt or to the slider. By this means when one of the door handles is rotated, the point of engagement between the other door handle and the swinging lever serves always as stationary fulcrum for said lever.

Other features and objects of the invention will more fully appear from the following description of a number of exemplary embodiments thereof with reference to the appended drawings.

In the drawings:

Figures 1 to 7 illustrate a door latch constructed in accordance with this invention and applicable to motor vehicles. In this latch both door handles, viz. the outer and the inner one, are mounted on a common axle, both being thus operatively connected to one another.

Figures 8 to 12 illustrate a second example of embodiment of a latch constructed according to this my invention, but wherein both door handles are operating independently of one another.

Figures 13 to 16 illustrate a further exemplary embodiment of a latch having mutually independent door handles.

Figures 17 to 20 illustrate another exemplary embodiment of a structure analogical to the above mentioned ones, whereas

Figures 21 to 29 illustrate various possible structures of a slider arranged between the latch bolt and the door handle of a latch.

In the first exemplary embodiment illustrated in Figs. 1 to 7 the latch bolt **30** is guided slidably between both walls **31** and **32** of the latch casing. The bolt proper consists of a head **34** cambered towards the base plate **33** of the latch casing, of a cylindrical part **36** shiftable in a chamber **35** of said casing and of two arms **37**, **38** connecting the said cylindrical part with the bolt head. Guided in grooves **40**, **41** of the walls **31** and **32** respectively is a pin **39** projecting upwardly and downwardly from the cylindrical part **36**. In this way the latch bolt **30** is adapted to

be moved not only in its longitudinal direction but also in a direction transverse to the plane of the latch when oscillated about the pin **39**. A leaf spring attached to a partition **42** of the latch casing tends steadily to urge the head **34** of the latch bolt towards the base plate **33** of the latch casing, whilst a coiled spring **44** which bears by one of its ends, at **45**, against the cross wall **46** of the latch casing and by its other end, at **47**, against the cylindrical part **36** of the latch bolt is adapted steadily to urge said latch bolt **30** outwardly in the direction of its length.

The latch casing is mounted in a door **49** of a motor vehicle in a known manner by means of screws **48**. When the door is closed, its inner edge is applied, also in a manner known per se, under a relatively great pressure onto a yieldable tightening lip **50** provided on the rigid motor vehicle body frame **51** surrounding the door opening. The head **34** of the latch bolt bears under a suitable pressure onto the rear face of a locking wedge **52** also arranged on the frame.

A slider **55** guided by its lateral lugs **54** in a slot **53** of the casing base plate **33** is adapted to develop a pressure necessary for the closing of the door. Said slider is carrying on its bifurcated outer end **56** a roller **58** rotatable on a pin **57**. Said roller bears, in closed position of the door, both on the base plate **33** of the casing and on the cambered surface of the latch bolt head **34**.

A cylindrically shaped end **60** of a lever **61** is engaged in a cavity **59** of the slider **54**. Said lever passes downwardly between the arm **38** of the latch bolt and the casing base plate **33**, its other end being fixed on a tumbler **62** journalled both in the said casing base plate **33** and in the cover plate **63** of the latch casing.

A longitudinal bore of square cross section is formed in the tumbler wherein a square shaped shank **64** is inserted having attached to both its ends respectively the outer and the inner door handles **65** and **66**. A contraction spring **67** having one of its ends attached to a hook-shaped extension **68** of lever **61** and connected by its other end to a pin **69** fixed in the latch casing is adapted to prevent any rattling of the upper cylinder-shaped end **60** of lever **61** in the cavity **59** of the slider **55**.

In order to explain the operation of the door latch, said latter is represented on the drawings in various stages of its opening and locking movement. Figs. 1 to 3 represent the latch in its closed or locked position, there being omitted in Figs. 1 and 2 the cover plate **63** of the latch casing and in Fig. 1 also the latch bolt **30**. These omissions have been made for the purpose of permitting a clear representation of the parts located behind the omitted ones. Fig. 3 represents a section of Fig. 2 taken on the line 3—3. Fig. 4 represents a section similar to that of Fig. 3. However, in these figures the parts of the latch are represented at the very moment when but the first stage of an opening or locking movement respectively is accomplished, whereas Figs. 5 and 6 represent in section and respectively in elevation the latch after its parts have already terminated their opening movement. Fig. 6 reprents the latch also with its casing cover plate **63** removed. Fig. 7 represents a section of Fig. 6 taken on the line 7—7.

When the door is firmly closed (Figs. 1 to 3) lever **61** takes the position denoted by A in Fig. 1. The roller **58** of slider **55** presses then both the latch bolt head **34** to the abutment **70** of locking wedge **52** and the base plate **33** of the latch and thereby the entire door towards the yieldable tightening lip **50** of the door frame. In this way the door is closed tightly and secured against rattling, being simultaneously pressed onto the edges of the said door opening. The cambered conformation of the latch bolt head **34** is such that the roller **58**, when in locking position, lies between two nearly parallel surfaces, so that the latch device has a self stopping effect. In other words, no forces acting in longitudinal direction of the latch bolt may be created by a pressure acting transversely to the plane of the door, i. e. no forces acting both on the latch bolt proper and on the slider carrying the roller **58** may be created thereby.

When the lever **61** is swung from its position B represented in Fig. 1 by depressing the outer or inner door handle **65** or **66**, it acts by means of its cylindrical head **60** to shift the slider **55** in its longitudinal direction until said slider will occupy the position represented on Fig. 4. In the same extent in which the roller **58** of the slider descends the wedged surface **71** of the bolt head **34** the latch bolt **30** itself is released and it is turned by the leaf spring **43** around its pivot **39** towards the base plate **33** of the latch casing until the highest portion of its camber will bear on the said base plate **33** (Fig. 4). The door may be now unclosed so far that between the tightening lip **50** and the inner surface **72** of the door there wil be formed a distinctly perceivable air gap **73**, and the bolt head **34** will yet freely lie on the abutment **70** of the locking wedge **52**.

During the shift movement of slider **55** towards the position represented on Fig. 4 with a simultaneous shifting movement of the latch bolt **30**, said slider enters into a rectangular opening **74** of the latch bolt and is thus in contact with the cylindrical portion **36** of the said latch bolt. Therefore when the slider is further shifted on account of a continued movement of lever **61** from its position C, past the position represented in Fig. 4 and up to its position represented in Figs. 5 and 6, it carries also the latch bolt **30** in opposition to spring **44** in such a way that said bolt is fully retracted into the latch casing. The door may be now entirely opened.

When a closing movement of the door is carried out the above recited operative steps follow in opposite order. So when one of the door handles **65**, **66** has been depressed, the door is primarily closed so far only that its inner surface **72** bears but slightly on the yielding tightening lip **50**. By moving the door handle upwards, the bolt is shifted out of the latch casing until it takes the position represented in Fig. 4. Such outward motion of the bolt is assisted by springs **44** and **67**. Should now the lever **61** be brought back into its initial position A by a further upward movement of the door handle, it will move the slider by means of its cylindrical head **60** in outward direction, whereas the latch bolt **30** is no more moving outwardly for the reason that its guiding pin **39** has been already brought to contact with the outer end of the guiding slots **40**, **41**. Therefore the roller **58** of the slider is moving now on the inclined surface **71** of the bolt head **34** and at the same time it turns the latch bolt **34** about the pin **39** up to the moment when the bolt reaches again its closing position represented on Fig. 3.

The locking operation may be also carried out without acting on the door handle by merely slamming the door. In the latter case the latch is acting as any conventional door latch wherein

the bolt 30 is retracted into the latch casing when its head 34 strikes on the inclined surface 75 of the locking wedge in opposition to spring 44. Thereby neither the slider 55 nor the door handles 65, 66 do change their positions. As soon as the inner surface of the door gets in contact with the tightening lip 50 and said latter is sufficiently compressed by the momentum of the slammed door, the bolt head 34 snaps under the action of spring 44 behind the abutment 70 of the locking wedge whereon the door is securely latched.

It is naturally an object of this invention to have doors closed noiselessly by operating a door handle. However an additional advantage of this my invention, as it will be seen from a further description of its embodiments, resides therein that doors provided with latches made on the basis of this invention may be also closed in the way heretofore practicable, where such operation would not be troublesome.

The exemplary embodiment represented on Figs. 8 to 12 differs from the above described one substantially therein that both door handles 65, 66 the axles whereof are mutually displaced may be operated independently one from another. In Figs. 8 to 12, in the same way as in the farther following figures, all parts of the latch, as well as the adjacent parts of the door and of the door frame have been designated by respectively the same reference numerals. Figs. 8, 10 and 12 represent again views of the latch having the cover plate of its casing removed. Fig. 8 illustrates the parts of the latch in their position of rest, Fig. 10 the same parts in an unlocking position obtained by a depression of the inner door handle 66, and Fig. 12 represents the parts of the latch in their unlocking position due to a depression of the outer door handle 65. Figs. 9 and 11 are sectional views taken on lines 9—9 and 11—11 respectively of Figs. 8 and 10.

In this embodiment also the bolt 30 is mounted shiftably in longitudinal direction in a chamber 35 of the latch casing and it is arranged swingably about its reinforced portion 36. The bolt 30 is held against movement in downward direction by means of its head 34 sliding in an aperture 77 of the latch casing as well as by means of a lug 79 of the cylindrical portion 36 sliding in a slit 78 of the base plate 33 of said latch casing. The leaf spring 43 again presses the bolt 30, when no other greater forces are acting thereon, to the base plate 33 of the latch casing. In contradistinction to the preceding exemplary embodiment, in this instance the roller 58 is mounted in the latch bolt and the inclined surface 71 causing the bolt to move in transverse direction is arranged on the slider 55. This latter is guided by a rectangular projection 54 engaging in the slit 78 of the base plate 33 of the latch casing in parallelism to the direction of movement of the latch bolt 30. Said slider carries on its inner bifurcated end 80 a swinging lever 82 pivotally mounted on a pin 81. A contraction spring 84 attached to the base plate of the latch casing by means of a pin 83 urges the latch bolt into its locked position. The cut-out 74 of the latch bolt wherein the slider 55 is moving has its aperture directed downwards, contrarily to the precedent example of embodiment. The purpose of such arrangement is to enable the swinging lever 82 to pass through said cut-out. Therefore the latch bolt head 34 is connected in that case with the cylindrical portion 36 of the bolt by means of an upper arm 37 only.

A tumbler 85 mounted rotatably in the latch casing is positively connected to the outer door handle 65 by means of a square shank 86 of said handle being inserted into the tumbler. Said latter carries rigidly connected thereto and arranged in the latch casing a lever 87 also pivotally connected by means of a link 90 mounted on pins 88, 89 with the bottom end of swinging lever 82. A contraction spring 92 attached to the latch casing by means of a pin 91 causes an extension 93 of the lever 87 to repose in a position of rest on a striker stud 94 secured in the latch casing. An inner door handle 66 is positively connected by means of a square shank 96 to a second tumbler 95 also rotatably mounted in the latch casing. Said inner door handle is connected by means of a link 98 and a lever 97 attached to the tumbler with a point lying between the ends of the swinging lever 82. This connection is of a similar linked nature as that of the outer door handle 65 with the bottom end of said swinging lever. The lever 97 is drawn in its position of rest towards a stationary abutment pin 101 by means of a contraction spring 100 engaging with its extension 99.

If lever 97 is now moved upwardly by depressing the inner door handle 66, it draws first the slider 55 by means of a link 98 and of a swinging lever 82 so far in backward direction that the inclined surface 71 of said slider moves through beneath the roller 58 of the latch bolt. The latch bolt is thereby swung due to the action of leaf spring 43, about its cylindrical portion 36, towards the base plate 33 of the latch casing. In this motion the pivot 89 of the link serves as fulcrum for the swinging lever 82, so that the link 90 and the lever 87 form nearly a straight line when in position of rest. On the other hand the traction forces transferred on the system 87, 90 when the inner door handle 66 is depressed are pressing the extension 93 of lever 87 with a greater force towards the striker stud 94, so that the outer door handle 65 remains in its position of rest when the latch is acted on by the inner door handle 66. When the slider, as it has been explained above, is drawn back by lever 97 so far that its inclined surface 71 has entirely cleared the roller 58 of the latch bolt, said slider abuts by its bifurcated inner end 80 on the cylindrical portion 36 of the latch bolt and at its further movement it draws the latch bolt into the latch casing up to the unlocking position represented in Figs. 10 and 11. When the latch is unlocked by the outer door handle 65, the movements of the slider 55 and of the latch bolt 30 are carried out in the same sequence as above, with the only difference that in said latter case the swinging lever 82 is turned by means of lever 87 and link 90 in clockwise direction. Hereby also the pivotal connection 102 of the link 98 serves as relatively stationary fulcrum for the swinging lever 82 (see Fig. 12).

During the locking operation of the latch, both of the door handles 65 and 66 are also operated independently one from another so that any time when a door handle depressed prior to the door being closed is performing an ascendent movement it operates a tilt of the swinging lever 82 in counterclockwise direction. Simultaneously also the pivot pin of the other door handle engaging with the swinging lever acts as a fulcrum for said latter. By this means first of all the latch bolt is shifted outwardly together with the slider by the assistance of contraction springs 84, 92, and 100 until said bolt striked onto a pin

103 secured in the lock casing whereafter the slider 55 continues its outward movement alone until it reaches the position represented on Figs. 8 and 9. Following to this the inclined surface 71 of the slider enters between the casing base plate 33 and the roller 58 of the latch bolt swinging thereby said bolt about its cylindrical portion 36. The head 34 of the latch bolt applies thereby forcibly against the abutment 70 of the locking wedge 52, the inner surface 72 of the door being thus pressed to the yielding tightening lip 50. The force applied for this purpose on the door handle is relatively small, because of the parts 97, 98 and 87, 90 respectively acting as toggle links and being nearly stretched at the end of the closing movement of the latch bolt. It may be clearly seen from the drawings that this embodiment of the latch may be also used for enabling the door to be closed by a mere slamming. In this case when the latch bolt gets in contact with the inclined surface 75 of the locking wedge, it is shifted inwardly and on having passed said inclined surface it snaps back outwards again under the action of spring 84, without thereby setting into movement the slider 55 and hence also the door handles 65, 66.

In the second exemplary embodiment provided with independently operated door handles as shown in Figs. 13 to 16 the latch is represented in locked position on Figs. 13 and 14. Fig. 14 represents a section of Fig. 13 taken on the line 14—14. Fig. 15 represents a latch unlocked by a depression of the inner door handle 66 whilst in Fig. 16 the same position of the latch bolt is shown after the outer door handle has been depressed. In all of the Figures 13, 15, and 16 each of which represents the latch in elevation the cover plate 42 of the latch casing has been removed again.

Broadly speaking the details and the operation of this latch are similar to those of the above mentioned exemplary embodiment. But in this case the levers 87, 97 moved by the door handles are not connected to the swinging lever 105 by links, such connection being made by means of pins 106, 107 carried by levers 87, 97 respectively and engaging into arcuate slits 108, 109 of the swinging lever. Thus when lever 87 is moved downwardly or lever 97 upwardly the swinging lever 105 is always tilted in clockwise direction, a pin 106 or 107 of that of the levers 87, 97 which is not moved, serving thereby as a fulcrum for said swinging lever. A further unsubstantial difference between this exemplary embodiment and the precedent one resides therein that in this case the roller 58 is arranged again in the same way as in the embodiment represented on Figs. 1 to 7, i. e. on the outer end of the slider 55, whilst the cambered inclined surface 71 is formed again on the head 34 of the latch bolt.

Another form of door latch according to this invention having handles acting independently from one another is represented in Figs. 17 to 20 of which Fig. 17 shows again the latch in locked position with the cover plate 42 of the latch casing having been removed; Fig. 19 is a section of Fig. 17 taken on the line 19—19, whilst Fig. 18 represents in elevation a latch unlocked by the depression of the inner door handle 66 and Fig. 20 is a similar view of a latch having been unlocked by a depression of the outer door handle 65.

In this exemplary embodiment the swinging lever 107 engages by means of a cut-out 111 provided on its upper end with a pin 81 of the slider 55. On the bottom end of a surface of the swinging lever facing the base plate 33 of the latch casing a block 112 is attached provided on two of its sides with gearing teeth. The upper teeth 113 of this block engage with a segment 114 provided with corresponding teeth and mounted to rotate on a stub shaft 115 secured in the base plate 33 of the latch casing. In the same way the bottom teeth 116 of part 112 are in engagement with a toothed segment 117 rotatably mounted on a stub shaft 118 also attached to the base plate 33.

The teeth 113 and 116 of the block 112 are formed on curves facing one another with their concave sides, the centre of curvature 119 of the arc of teeth 113 lying in the point of contact of the pitch circle of teeth 116 of the block 112 with the pitch circle of the teeth of segment 117. On the contrary, the centre of curvature 120 of the arc of teeth 116 of part 112 is located in the point of contact of the pitch circle of the teeth 113 of part 112 with the pitch circle of the teeth of segment 114. Therefore the swinging lever 110 will rotate about the centre of curvature 119 as about a fixed fulcrum in clockwise direction when the toothed segment 114 is rotated in counterclockwise direction. Furthermore there will be also a clockwise rotation of the swinging lever 110, but this rotation is carried out about the centre of curvature 120 as about a fixed fulcrum, when the toothed segment 117 is turned in counterclockwise direction. The toothed segment 114 is also in operative engagement with another segment 121 rigidly mounted on the rotary tumbler 95 of the inner door handle 66, whilst the toothed segment 117 engages with a further segment 122 rigidly mounted on the rotary tumbler 85 of the outer door handle 65. Owing to the above disclosed arrangement, when the inner door handle 66 is depressed the swinging lever 110 is turning about the centre of curvature 119 in clockwise direction. By this motion, in the same way as has been described in connection with the precedent embodiments it retracts primarily into the latch casing the slider 55 and thereafter also the latch bolt 30. A similar unlocking operation is also present when on account of depressing the outer door handle the swinging lever 110 is rotated about the centre of curvature 120 in clockwise direction. On the other hand when both of the door handles are moved in upward direction, the parts of the latching mechanism are moving in opposite directions. When both segments 121 and 122 are in their position of rest they are drawn respectively by contraction springs 123 and 124 towards abutment pins 125 and 126 fixed on the base plate of the casing. When the latch is unlocked by means of one of the door handles 65, 66, the segment belonging to the other door handle is yet more pressed to its abutment pin by reaction forces acting thereon. In this way the position of one of the door handles is not influenced by a depression of the other one, both door handles being thus adapted to operate quite independently from one another.

Figs. 21 and 22 represent in section and in fragmentary view an embodiment of the latch wherein the inclined surface 71 causing the latch bolt to perform its cross movement is arranged on a member 128 fixed on the latch casing. In this exemplary embodiment the latch bolt 129 has its shape in plan limited substantially by parallel surfaces, and the slider 55 moved by the lever 61 carries at its outer end two links 131,

132 having rotatably arranged therebetween a roller 133. When the slider 55 is moved by lever 61 rigidly mounted on the tumbler 52, the roller 133 is riding along the inclined surface 71 of member 128 causing thereby a corresponding transverse or cross motion of the head of the latch bolt 129.

Furthermore the slider 55 may also carry on its outer end two somewhat mutually spaced rollers 135, 136 as represented in Fig. 23, whereby one of said rollers (135) is bearing on the base plate 33 only of the latch casing and the other one (136) on the inclined surface 71 of the bolt latch head 34 only. In this way both of the rollers are adapted to ride on their corresponding guide surfaces when the slider is moving so that any sliding friction in this place is avoided.

In Fig. 24 a further embodiment of the invention is shown having a number of rollers 137, 138 of different diameter arranged on one another on a common axle 139 carried by the slider 55. The rollers 138 of smaller diameter are rolling on the inclined surface 71 only of the latch bolt head 34, whilst the rollers 137 of greater diameter are only contacting with the base plate 33 of the latch casing. For this purpose there is provided in the inclined surface 71 a depression 140 having its breadth and depth corresponding to the roller 137 having a greater diameter. By this means here also any sliding friction between the rollers on the one hand and the base plate of the latch casing or the inclined surface of the head bolt on the other hand is avoided.

Finally Figs. 25 to 29 represent another exemplary embodiment wherein instead of an inclined surface causing in the precedent instances the latch bolt to perform its transverse movement a link between the slider and the latch bolt is arranged. Fig. 25 represents in elevation the inner disposition of a latch in its locking position with the cover plate 42 of the latch casing having been removed. For the sake of simplicity there is represented again a latch with one door handle 66 only or respectively with two door handles mounted on a common square shank 64. However it should be understood that with this latch also there may be applied all of the heretofore described types of door handles working independently from one another. All of the heretofore described variations of the details of the latch structure may be also generally used with any of the main typical embodiments of the latch. Figs. 27 and 28 show respectively in similar views the latch after the termination of the first stage of its unlocking or locking movement and the fully unlocked latch, whereas Fig. 29 represents once more separately the slider of such a latch device.

With this embodiment of the latch the latch bolt 141 has substantially again parallel limiting surfaces and it is also arranged to slide longitudinally by means of a pin 39 provided in its rear end in slits 40, 41 of the walls 31, 32 of the latch casing and it is also guided to perform a transverse swinging movement about the said pin 39. Also a leaf spring 43 is adapted to swing the latch bolt towards the base plate 33 of the latch casing when no great external forces are acting thereon. The slider is also provided on its outer end with a roller 58 the rotation axle 57 whereof projects upwardly and downwardly out of the slider and is engaged in slits 142, 143 of the casing walls 31, 32 serving thus as a guide for the longitudinal movement of the slider. The slider is moved in longitudinal direction here also by means of a lever 61 rigidly connected to the door handle 66 by means of a square shank and a tumbler 62, a ball shaped head 144 of said lever being engaged in a cavity 59 of the slider. Two links 145, 146 are mounted on the rotation axle 57 of the roller 58, said links being swingably engaged on their other end by means of a pin 147 in a cut-out 148 of the latch bolt.

In the locking position of the latch parts represented on Figs. 25 and 26 the links 145, 146 have taken a position substantially at right angles to the latch bolt 14 and by the intermediary of roller 58 they are pressed to the base plate 33 of the latch casing. By this means the latch bolt 149 is forcibly pressed to the abutment 70 of the locking wedge 52 and in the same way the base plate 33 of the latch casing and therefore also the inner surface of the door are forcibly pressed to the yielding tightening lip 50 on the edge of the door opening. If now by a depression of the door handle 66 the lever 61 is moved clockwise it draws the slider in the intermediate position represented on Fig. 27 in which the latch bolt 141 may be swung towards the base plate 33 of the lock casing so far that it will take a position nearly parallel to said base plate. Thereby the pressure exerted by said latch bolt on the locking wedge and acting in a direction transverse to the plane of the door is relieved. Now the roller 58 bears onto the inner surface of the latch bolt, so that during a further movement of the lever 61 in the above indicated direction the latch bolt is retracted into the latch casing by the slider up to the position represented in Fig. 28 without any great resistance being encountered. When the door is to be closed, the above indicated operative steps are also carried out in an opposite order.

ANTON DIEMER.

PUBLISHED A. DIEMER Serial No.

MAY 25, 1943. DOOR-LATCHES, ESPECIALLY FOR MOTOR VEHICLES 303,977

BY A. P. C. Filed Nov. 13, 1939 5 Sheets-Sheet 1

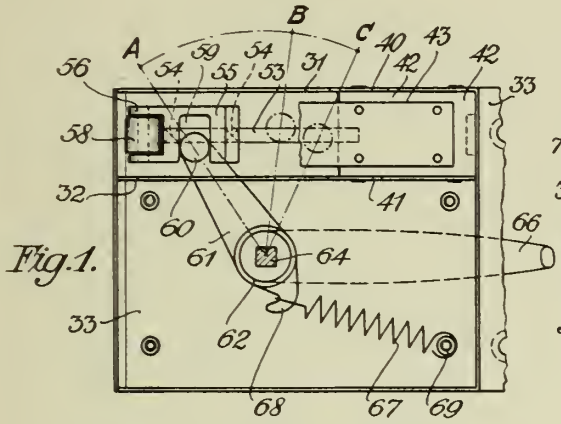

Fig. 1.

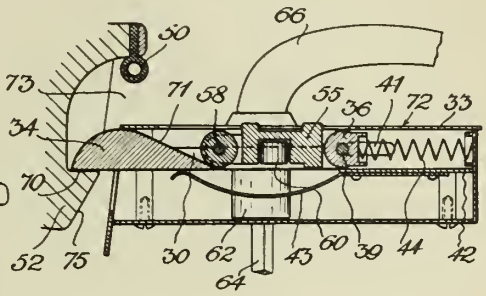

Fig. 4.

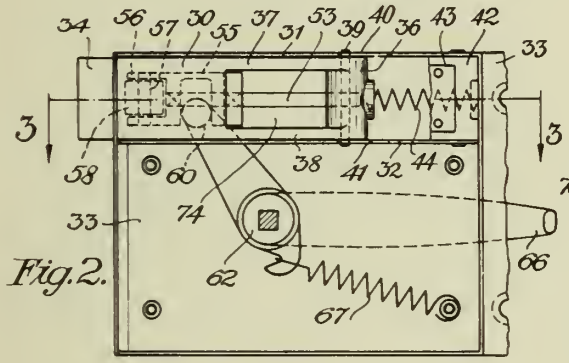

Fig. 2.

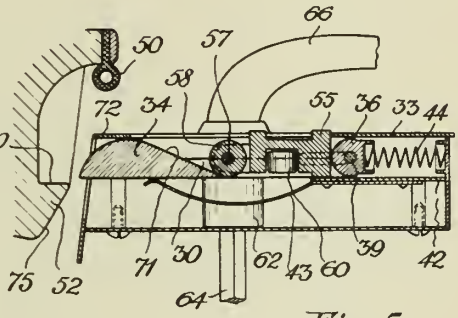

Fig. 5.

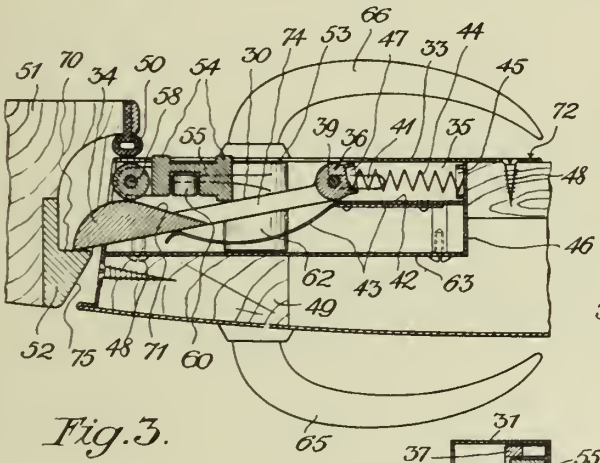

Fig. 3.

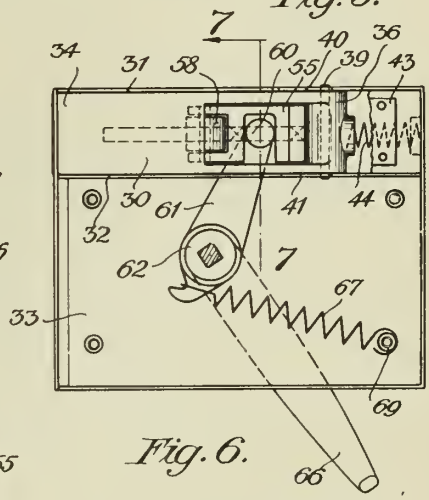

Fig. 6.

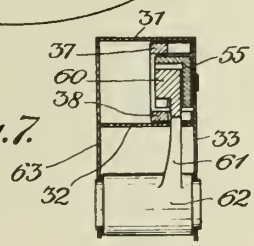

Fig. 7.

INVENTOR
ANTON DIEMER
BY G. A. Hinks
Clowell Rann Jr.
ATTORNEYS

PUBLISHED MAY 25, 1943. BY A. P. C.

A. DIEMER

DOOR-LATCHES, ESPECIALLY FOR MOTOR VEHICLES

Filed Nov. 13, 1939

Serial No. 303,977

5 Sheets-Sheet 2

Fig. 8.

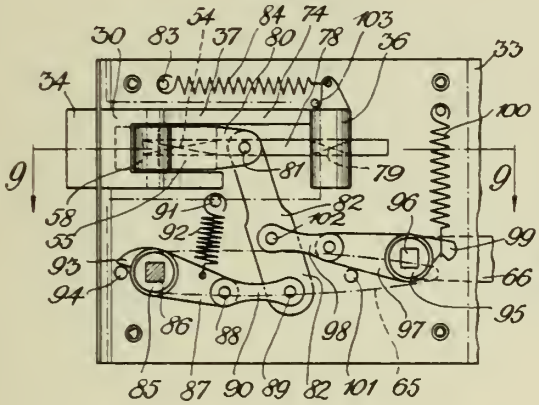

Fig. 10.

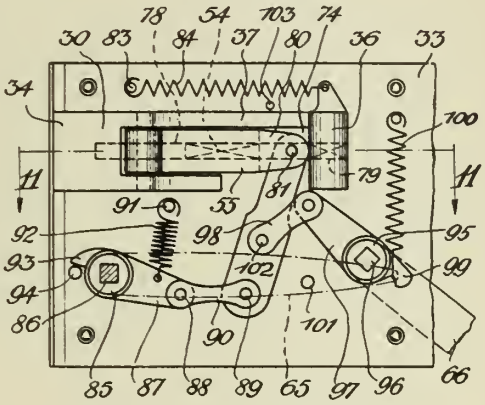

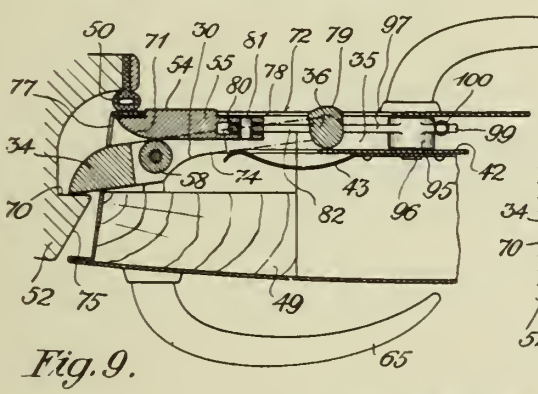

Fig. 9.

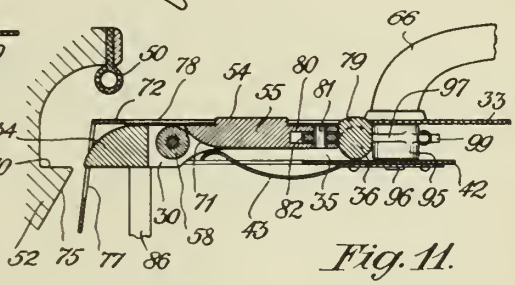

Fig. 11.

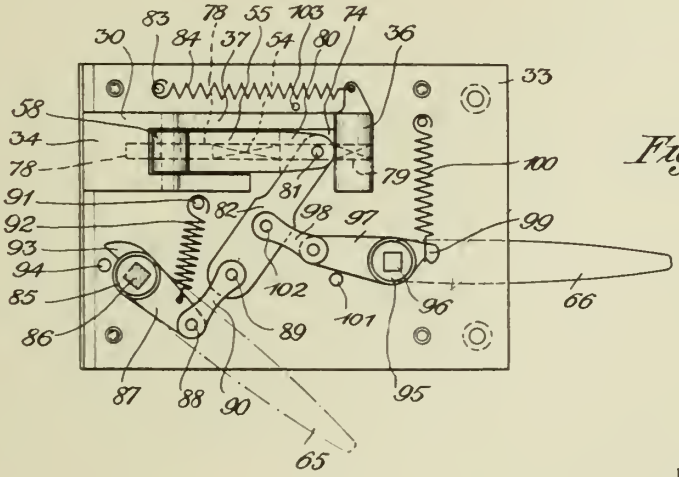

Fig. 12.

INVENTOR
ANTON DIEMER
BY G. A. Leisk
Merrill Rowe, Jr.
ATTORNEYS

PUBLISHED

MAY 25, 1943.

BY A. P. C.

A. DIEMER

DOOR-LATCHES, ESPECIALLY FOR MOTOR VEHICLES

Filed Nov. 13, 1939

Serial No. 303,977

5 Sheets-Sheet 3

Fig. 13.

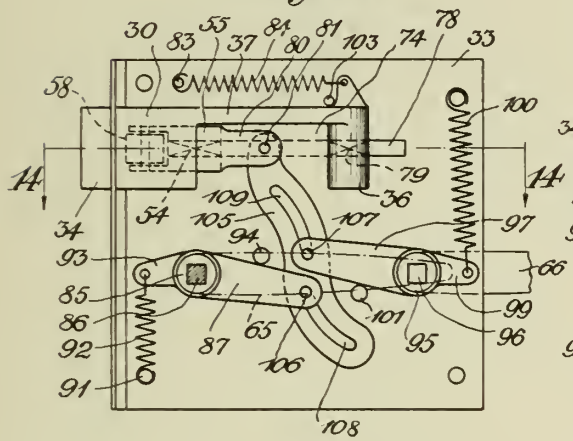

Fig. 15.

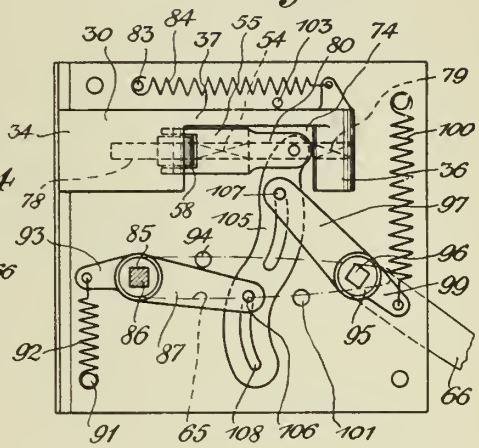

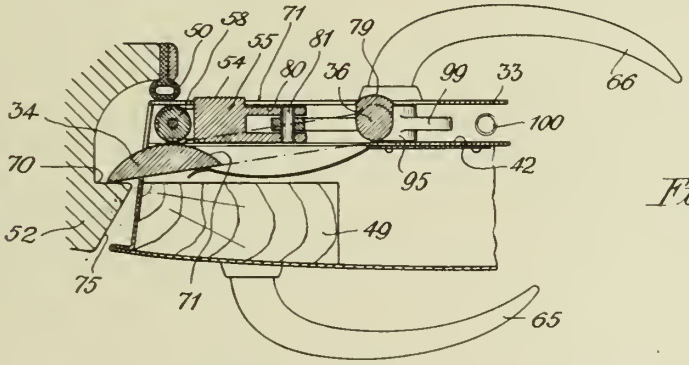

Fig. 14.

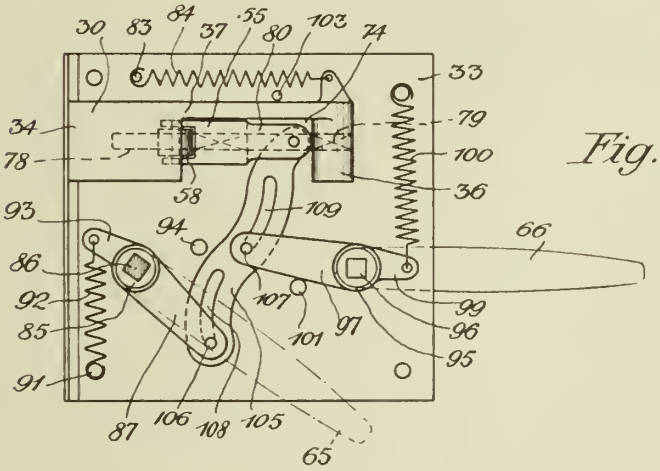

Fig. 16.

INVENTOR

BY ANTON DIEMER

A. A. Hirsch

Stowell Rumsey Jr.

ATTORNEYS

PUBLISHED MAY 25, 1943. BY A. P. C.

A. DIEMER

DOOR-LATCHES, ESPECIALLY FOR MOTOR VEHICLES

Filed Nov. 13, 1939

Serial No. 303,977

5 Sheets-Sheet 4

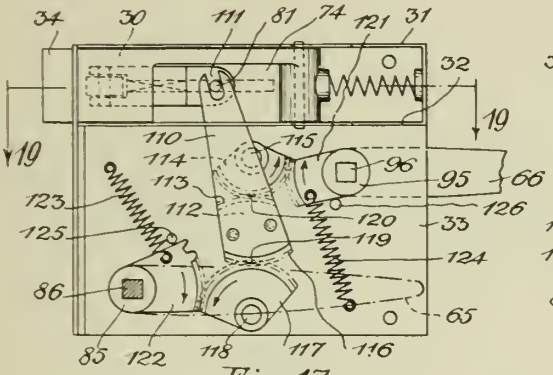

Fig. 17.

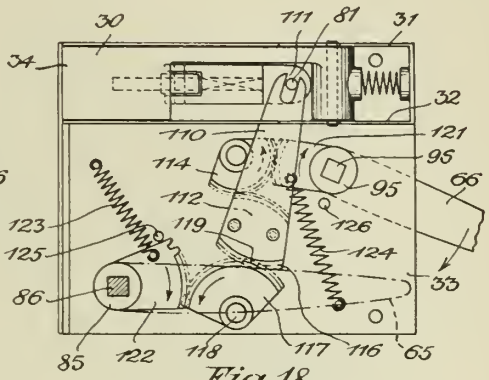

Fig. 18.

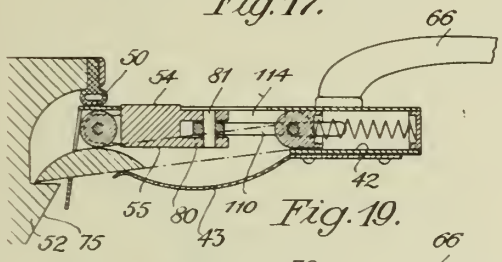

Fig. 19.

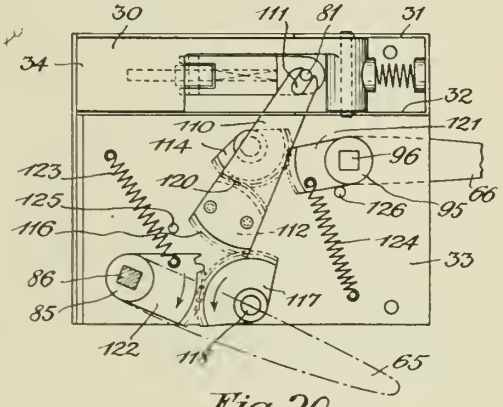

Fig. 20.

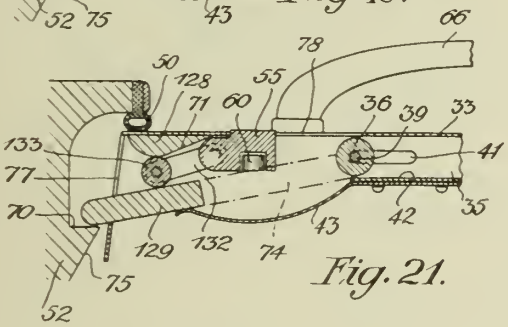

Fig. 21.

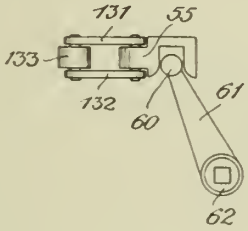

Fig. 22.

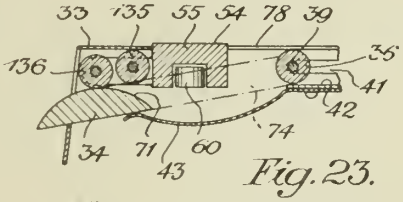

Fig. 23.

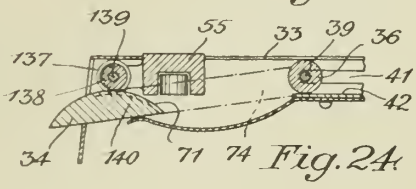

Fig. 24.

INVENTOR
ANTON DIEMER
BY A. G. Hill
Howell Brown Jr.
ATTORNEYS

PUBLISHED MAY 25, 1943. BY A. P. C.

A. DIEMER

DOOR-LATCHES, ESPECIALLY FOR MOTOR VEHICLES

Filed Nov. 13, 1939

Serial No. 303,977

5 Sheets-Sheet 5

Fig. 25.

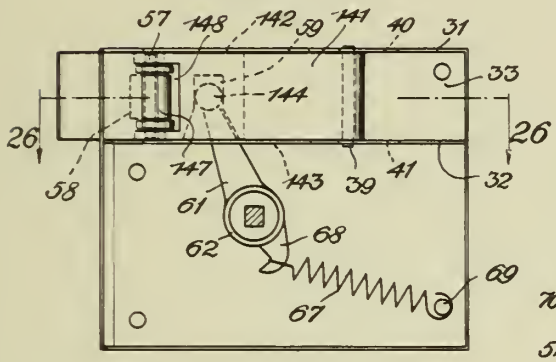

Fig. 27.

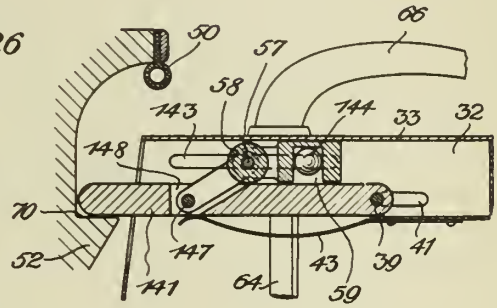

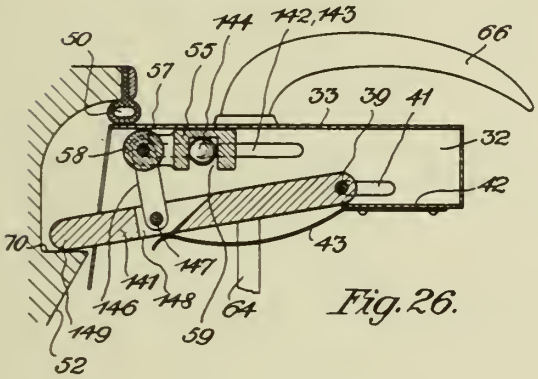

Fig. 26.

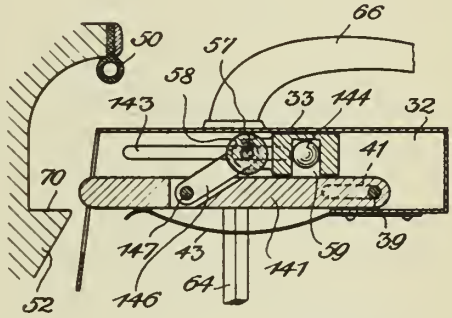

Fig. 28.

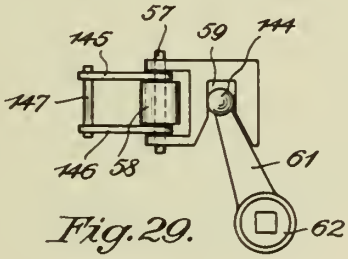

Fig. 29.

INVENTOR

BY ANTON DIEMER

A. A. Dick

Clarence Cannon Jr.

ATTORNEYS

Published May 25, 1943

Serial No. 304,414

ALIEN PROPERTY CUSTODIAN

HIGH PRESSURE CONTAINER

Emil Kopf and Roland Wasmuht, Dortmund, Germany; vested in the Alien Property Custodian

Application filed November 14, 1939

In our application for patent Ser. No. 245,048 filed on the 10th of December 1938 a high pressure container is described which consists of a comparatively thin-walled solid base body, whose main portion is only strong enough to take up the longitudinal stresses, said main portion being made in one piece with the ends which are strong enough to take up the longitudinal and transverse forces, and whose main portion is strengthened for taking up the transverse forces by rolled-on layers of sheet metal plates welded together in the longitudinal direction.

The present invention relates to an improvement of the invention described in the main patent application in that it is proposed to obtain the strengthenings of the comparatively thin-walled solid base body thereby that layers of bands are tightly wound around the same. It is advisable, to shrink on them band layers in warm state, in order that by the shrinking stresses produced during the cooling pressure stresses are produced in the inner cylinder.

Several embodiments of the invention are illustrated by way of example in the accompanying drawing, in which

Fig. 1 shows a forged cylinder with several band layers wound around it.

Fig. 2 shows an arrangement, in which at the end of the forged cylinder a step-like change from the cylinder wall to the thickened head end is provided, and

Fig. 3 shows another construction of the head end.

A cylinder 1 forged according to the known method and flanged at the ends is covered with several band layers 2 wound around it (Fig. 1). These band layers are, for instance, shrunk on in order to produce preliminary pressure stresses in the forged cylinder wall. The band layers are applied on the base body in warm state.

The form of construction shown in Fig. 2 illustrates a forged cylinder 1, whose ends are either made as flanges or equipped with a screw thread 3, on which a flange 4 can be screwed. The end of the cylinder has a step-like transition from the cylinder wall to the thickened head, so that the band layers applied on to the cylinder bear each one against a vertical edge and thereby look as if they were completely covered. By the step-shaped transition 5 from the cylinder wall to the thickened head a favourable stress is attained in the transition portion. The uppermost band layers are secured in position by a ring 6 rolled over the same, welded-on and shrunk-on.

The head ends may be produced in the most various manner, such as shown in the Figs. 1 and 2 and also in the Fig. 3; other forms of construction are, however, possible.

EMIL KOPF.
ROLAND WASMUHT.

PUBLISHED
MAY 25, 1943.
BY A. P. C.

E. KOPF ET AL
HIGH PRESSURE CONTAINER
Filed Nov. 14, 1939

Serial No.
304,414

Fig. 1

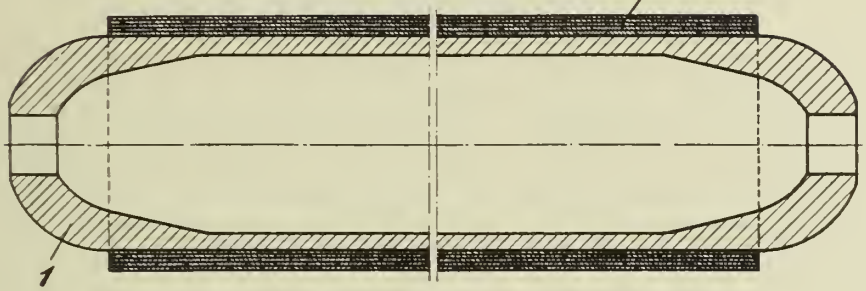

Fig. 2

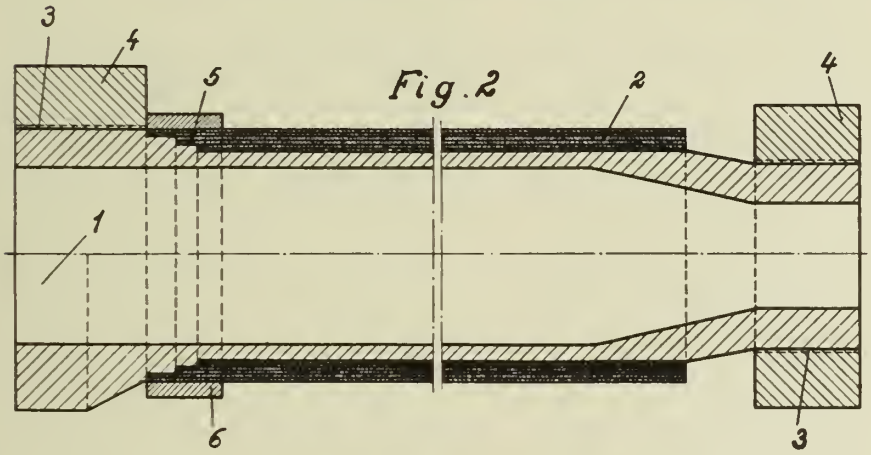

Fig. 3

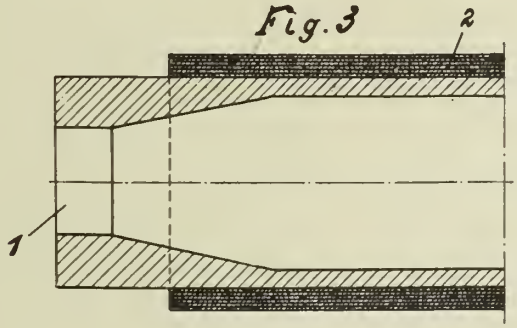

Inventors,
E. Kopf + R. Wasmuht

By: Glascock Downing & Seebold
Attys.

Published May 25, 1943

Serial No. 304,633

ALIEN PROPERTY CUSTODIAN

RESILIENT SUPPORTS

Maurice Francois Alexandre Julien, Paris, France;
vested in the Alien Property Custodian

Application filed November 15, 1939

The present invention relates to supports of resilient material which are capable of providing a rigidity or stiffness regulated in certain directions, these different variations of stiffness being either of a positive or negative character. If desired, accessory devices may be employed which will permit of a progressive limitation of the deformation of the resilient material.

The supports of resilient material, and more particularly those in which the material adheres to metal members such as frames or the like which are attached to the article to be supported, such as internal combustion engines have in general well defined resiliences in different directions but such are not capable of obtaining or providing different elasticities in certain directions that are necessary. In the various applications or uses of these resilient supports it is necessary to have a very great or very small elasticity in quite a definite direction, as compared with the natural elasticity of the resilient material.

Reference will now be made to the accompanying drawings, in which:

Figures 1 and 2 show views of a support illustrating the invention.

Figure 3 is a sectional plan view of a modification of the invention.

Figures 4 and 5 show respectively a sectional plan view and a side elevation in section of a further modification.

Figure 6 shows a sectional plan view of a further modification of the invention.

In order to increase the elasticity of the support in certain directions, while still maintaining the same order of magnitude of the various directive elasticities, suitably arranged cavities or apertures are according to the invention provided in the elastic mass of the support, so that at the time of functioning, new movements of the elastic mass are rendered possible by modifications of the volume of the voids or spaces made.

Figures 1 and 2 show an embodiment of a support in which the presence of holes produces a low rigidity along two radial directions Ox and Oy and consequently, it may be, in all directions inlined to the plane xOy as for instance Oy^1 of Figure 1. A resilient mass of material **3**, connecting the two reinforcements **22** and **23**, is pierced with cylindrical holes **24**, arranged on circles for example, and not necessarily of the same dimensions. These holes enable the india-rubber as a whole to rise or flatten with freedom, in the relative displacements of the reinforcements **22** with respect to the reinforcements **23**, in directions contained in the plane xOy. It will be noted that the rigidity of the resilient mass, when the reinforcements are urged in a direction Oz perpendicular to the plane xOy, is also diminished, but in a much smaller ratio than in the directions contained in the plane xOy, where it would be considerable if the holes were not provided. By this means, therefore, it is possible to obtain a rigidity of the same order of magnitude in the three main or rectangular directions.

Figure 3 represents a preferred form of the invention in which the support comprises an india-rubber washer **3** resembling a wheel with spokes, the latter being of india-rubber. This has the advantage over the form shown in Figure 2 in that the proportion of voids **25** in relation to the solid parts of the elastic mass is increased.

In the form of the invention illustrated in Figures 4 and 5 the reinforcements **22** and **23** are not circular in shape as in the previous example. This renders it possible to proportion the elasticity at will in the various directions according to the shape and number of holes **26** of the plane xOy, the elasticity along the perpendicular Oz to this plane being affected, but in a smaller proportion to that of the plane xOy.

Figure 6 shows a further modification of the invention where, with a view to supporting a permanent load P with less deformation of the support, an asymmetry has been obtained by providing the lower holes **27** of a much smaller size, so as to augment the rigidity in the direction of the load.

The invention provides moreover, as has been stated, means for giving rise to resilient recoils which are not proportionate but increase more rapidly with the amplitude. Hitherto, in the majority of cases of the use of india-rubber supports, rigid stops were employed to limit the amplitudes suddenly. In the event for instance of deterioration of the elastic mass. In the present invention stops which would result in an abrupt or sudden limitation of the amplitudes are avoided and this involves important practical advantages.

This progressive stoppage as distinct from sudden stoppage is obtained in certain directions by the cavities or voids as will be explained. The limitation of the amplitudes is produced progressively in the directions in which the voids expand or are compressed, for the mass offers more resistance when it is approaching the limit of deformation of the voids. In particular, when the resilient mass has completely filled or almost filled the volume of the holes, it cannot be further compressed and it can no longer work except by lateral expansion. But in the other directions, for

instance 0z for the supports of Figures 1 to 6, it is necessary to have recourse to new means.

For this purpose two metal members or reinforcements (or one only) of the supports may be provided with members capable of limiting, in the neighbourhood of these metal members, the angular deformations of the india-rubber and two collars 36, 36′ shown in dotted lines are provided.

The collars shown are represented in connection with the metal members, but the invention includes the case in which they are directly connected to the frame-work or to the article to be supported. They would then have more clearly the character of progressive stops, on account of their flared shape, acting directly to limit the amplitude of the deformations of the india-rubber itself.

MAURICE FRANÇOIS ALEXANDRE JULIEN.

PUBLISHED
MAY 25, 1943.
BY A. P. C.

M. F. A. JULIEN
RESILIENT SUPPORTS
Filed Nov. 15, 1939

Serial No.
304,633

Fig. 1.

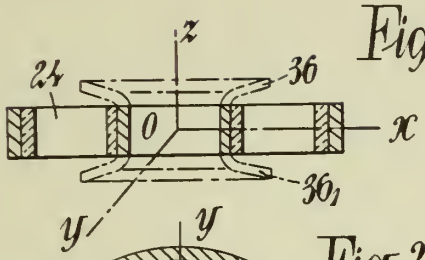

Fig. 2.

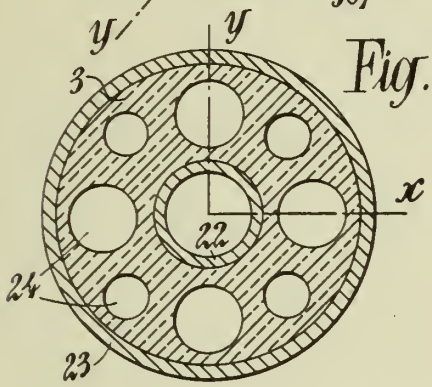

Fig. 3.

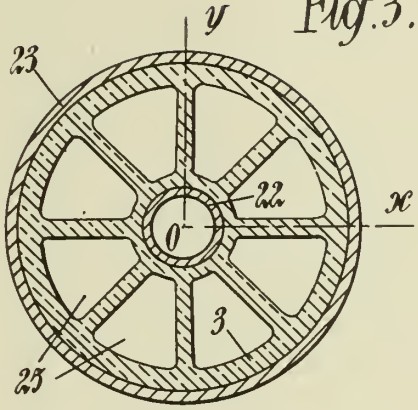

Fig. 4.

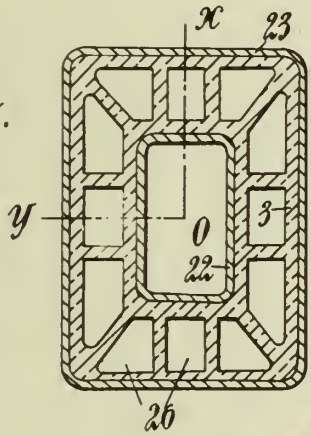

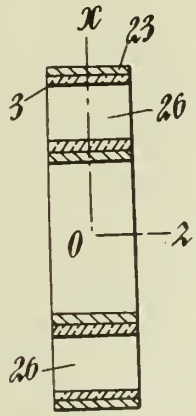

Fig. 5.

Fig. 6.

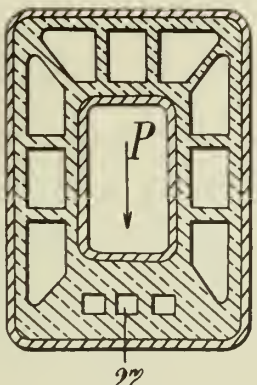

Inventor
M. F. A. Julien

By: Glascock Downing & Seebold
Attys.

Published May 25, 1943

Serial No. 304,820

ALIEN PROPERTY CUSTODIAN

ROPE DRUM WITH REGULABLE HYDRAULIC DRIVE ESPECIALLY FOR LIFTS

Erwin Sturm, Boll bei Goppingen, Germany; vested in the Alien Property Custodian

Application filed November 16, 1939

This invention relates to a rope drum, especially for lifts having a regulable hydraulic drive. Regulable drives require in general additional implements to be attached especially outside of the rope drum. These arrangements necessitate, therefore, a comparatively large space for housing them and cannot, in consequence thereof, be employed in cases in which only a small place is available.

The present invention is based on the discovery that hydraulic drives comprising, with consideration to their comparatively easy regulableness, a pump and a motor are particularly suited to be placed into the interior of the rope drum in that this affords the possibility to arrange also the regulating device within said drum.

Besides this characteristic feature of the invention, another characteristic feature consists therein that the regulating device located within the rope drum is provided with a control shaft extending parallel to the axle of the driving gear, this shaft being coupled with the motor or with the pump or with both these parts by the intermediary of suitable control members, for instance cam disks or the like. Arranging the gearing, including the control device, within the rope drum renders it possible to attain certain further important advantages, as will appear from the detailed description of certain particular constructional forms dealt with hereinafter.

The invention comprises, however, also a particular design of the regulating device itself, in that in this device the maximum speed accommodates itself automatically to the load at the time being. For this purpose, the regulating device is, according to this invention, provided with either only one abutment member or with a plurality of such members by which the length of the transmission path is limited, preferably only one end abutment member is provided for limiting the eccentricity of the hydraulic motor in both direction of rotation.

The invention is illustrated diagrammatically and by way of example on the accompanying drawings on which Figure 1 shows a longitudinal section through a rope drum designed according to this invention. Figure 2 shows a transverse section in the plane II—II of Fig. 1, a few parts being omitted in this figure. Figure 3 is a plan of the control part of the gear pump, and Fig. 4 is a plan of the control part of the motor.

On the drawing, 1 (Fig. 1) denotes the rope drum which is supported in the usual manner in a casing 2, the shell 3 of which is provided with a longitudinal slot 4 for the passage of the rope. The casing 2 is closed at its frontal ends by means of flanged covers 5 and 6. The cover 5 constitutes a rigid bearing for the casing 7 of the hydraulic gearing, and the cover 6 is provided with a cylindrical collar 8 forming a bearing for a cylindrical extension 9 of the casing 7 and permitting an axial displacement of said extension. The casing 7 embraces with its middle portion an annular member 10 which may be integral with said casing. Said member 10 divides the casing into two parts, of which that on the left side serves for the reception of the pump and that on the right side serves for the reception of the motor.

The blade drum 11 of the pump which (the blade drum) is connected up to said motor across a clutch is supported in a race bearing 12 abutting on the cover 5 and in a race bearing 13 abutting on the annular member 10. The blade drum 11 is enclosed by a casing that is adjustable eccentrically with respect to the drum and consists of a ring 14 provided with lateral covers 15 and 16. These covers have rim flanges and abut on the supporting frame 19 by the intermediary of race bearings 17 and 18, which are displaceable radially with respect to the gearing axle in guides 20 (Fig. 3).

The supporting frame 19 shown in the left-hand half of Fig. 1 is provided with a pivot 21 engaging a curved slot 23 across a race socket 22 provided in a disk piece 25 keyed to the control shaft 24. The control shaft is supported in the covers 5 and 6 and can be adjusted by means of a hand wheel (not shown). The extent of the displacement of the supporting frames 19, which are rigidly connected with one another by webs 26, in dependency of the turning of the control shaft, is determined by the shape of the curved slots 23.

With the chamber formed by the casing surrounding the drum are arranged in known manner the blade pistons 27, of which one is visible in Fig. 1. Within the drum 11 is provided a guide axle 29 that abuts on a roller bearing and is rigidly supported at one of its ends in a flange 6.

The hydraulic motor shown in the right-hand half of Fig. 1 is designed similar to the pump so that no detailed description of its construction is necessary, but I mention, anyhow, separately that the projecting end of the drum 30 is provided with a toothing 31 meshing with gear wheels arranged in a chamber provided in the flange 6. The control means for the supporting frame 32 correspond, as regards their construction, substantially with those provided for the

supporting frame 19, there existing only that one difference that the shape of the curved slot 33 (Fig. 4) is accommodated to the motor. The control slots 23 and 33 are so designed that the control of the pump and of the motor can be effected with the aid of only one control shaft. With such an one-lever control there is, in general, provision made that the eccentricity of the motor has attained its maximum value when that of the pump is the smallest. Furthermore, the eccentricity of the motor maintains its maximum value substantially over the entire regulation range of the pump so that the regulation of the motor joins substantially the regulation of the pump. This condition is true, as a matter of course, for both directions of rotation.

The control slots might also be provided at the supporting frames whereas the pivots engaging said slots might be arranged at levers of the control shaft.

In order to attain a greater accuracy of adjustment, the control member may be formed by a pinion keyed to the shaft 24 and meshing with the toothing of a ring supported in the gear casing and acting on the supporting frame by the intermediary of a suitably shaped control slot and a pivot engaging this slot.

In order to obtain space for housing the requisite amount of the driving agent, the chamber 34 provided in the flanged cover 6 and containing the gear wheels is made use of for said purpose. This chamber communicates with the working spaces of the pump and the motor through vertical bores 35, as well as through bores 36 extending axially through the guide axle 29, on the suction side and on the pressure side respectively.

In the gear casing is provided a journal 37 for a two-armed lever 38, the end 39 of which co-operates with an abutment member 40 secured to the supporting frame of the hydraulic motor, whereby the extent of the eccentrical adjustment of the motor is determined. The other end (41) of said lever 38 engages across a ball clutch a piston 42 supported radially shiftable with respect to the gear axle in a bore 45 of the cover 6. The piston 6 abuts across a screw-threaded pin 44 that is adjustable from the outside on a compressive spring 45. The bore containing the piston 42 is closed by means of a screw-threaded cover 46. An externally screw-threaded sleeve 47 which can be fixed in its normal position serves as an end abutment for the piston 42. The space above this piston communicates through a hole 48 and a conduit 49 (Fig. 2) with that passage of the two conduits 36 which serves as pressure passage.

The manner of operation of the device is as described hereinafter, but I abstain from describing also the manner of operation of the gearing as this is known and does not form a part of the present invention.

By turning the control shaft 24 first the pump is caused to supply the driving agent to the motor so as to start same, but owing to the weight of the load to be lifted the driving agent is subjected to a pressure which is higher than the pressure existing at idle running. The thus increased pressure of the driving agent acts upon the piston 42 by which the two-armed lever 36 and, thus, also the limiting abutment members 39 are adjusted counter to the action of the spring 46, the adjustment corresponding with the weight of the load existing at the time being. When now the control shaft is further turned, first the pump is adjusted to its maximum eccentricity and thereafter the eccentricity of the motor is decreased by the limiting abutting member in dependency of the weight of the load allowed at the time being. As by the characteristic of the counter-acting compressive spring 45 for the limiting abutment member 39 this member determines, in the case of a load of great weight of the load allowed at the time being. As by the characteristic of the counter-acting compressive spring 45 for the limiting abutment member 39 this member determines, in the case of a load of great weight, the appertaining ratio of transmission already at a low pressure of the driving agent, the performance will be smaller at low weight of the load and at the usual design of the control curve of the pump at which a constant feed over the entire range of the hydraulic motor is obtained.

In order to maintain the performance on a constant value over the entire range of the hydraulic motor, the sine curve of the motor is so designed that the pump gets an additional enlargement of the eccentricity during the regulation of the motor, in such a manner, that the product of the amount delivered and the pressure of the driving agent is constant over the entire regulation range of the motor.

ERWIN STURM.

PUBLISHED

MAY 25, 1943.

BY A. P. C.

E. STURM

ROPE DRUM WITH REGULABLE HYDRAULIC DRIVE ESPECIALLY FOR LIFTS

Filed Nov. 16, 1939

Serial No. 304,820

2 Sheets-Sheet 1

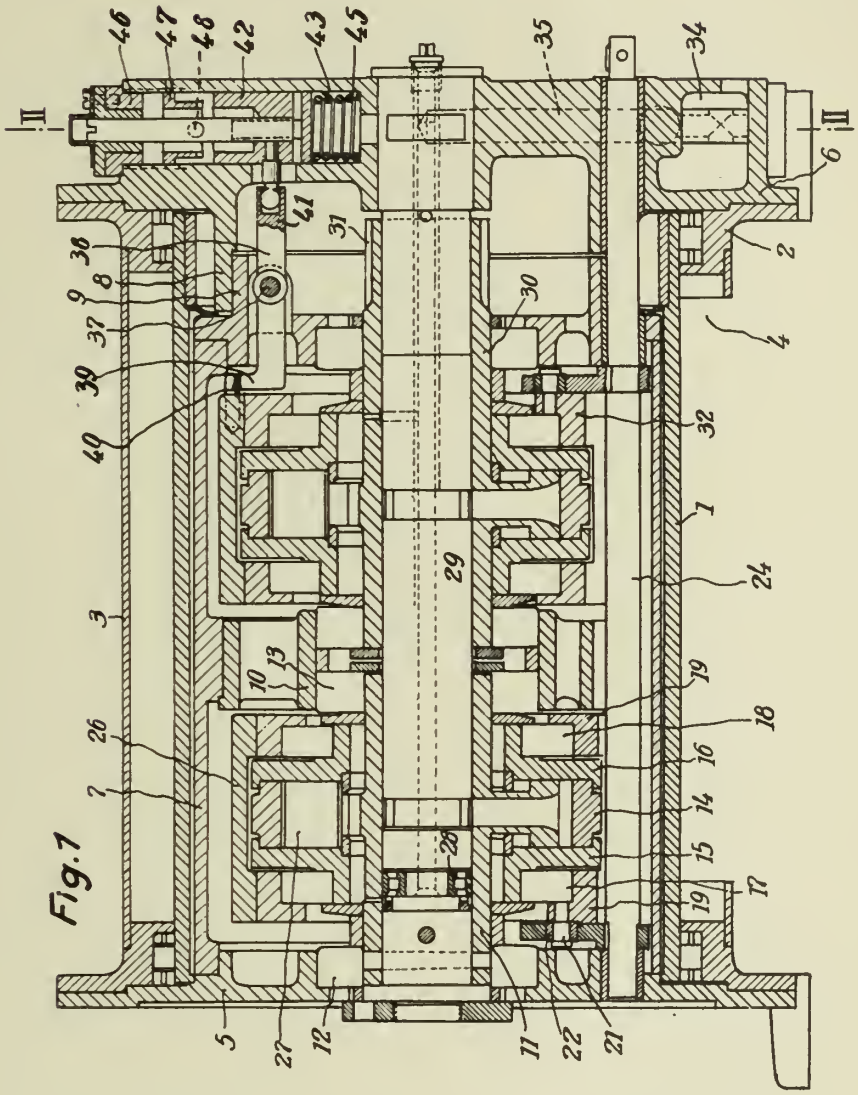

Fig. 1

Inventor,
E. Sturm

By
Glascock Downing & Seebold,
Attorneys.

PUBLISHED

MAY 25, 1943.

BY A. P. C.

E. STURM

ROPE DRUM WITH REGULABLE HYDRAULIC DRIVE ESPECIALLY FOR LIFTS

Filed Nov. 16, 1939

Serial No. 304,820

2 Sheets-Sheet 2

Fig.2

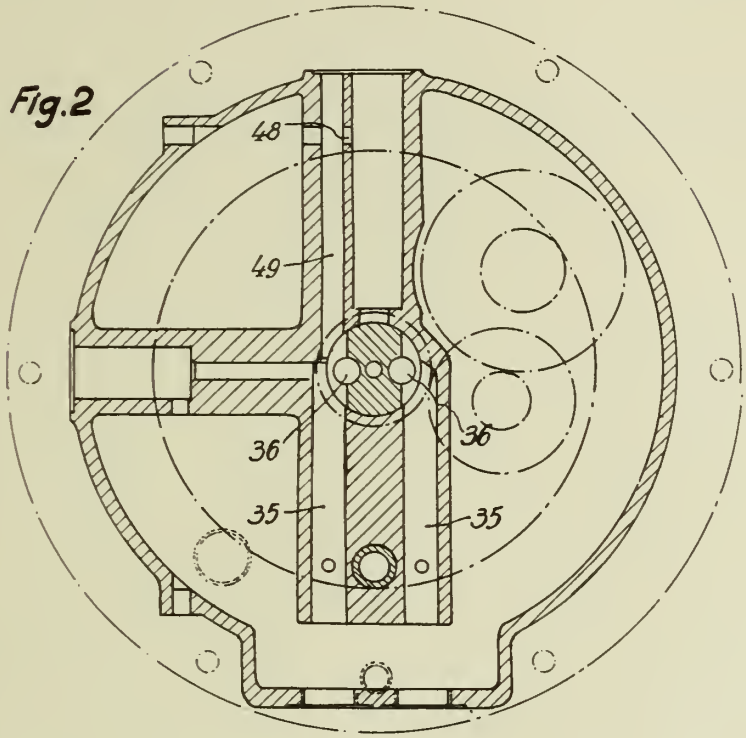

Fig.3

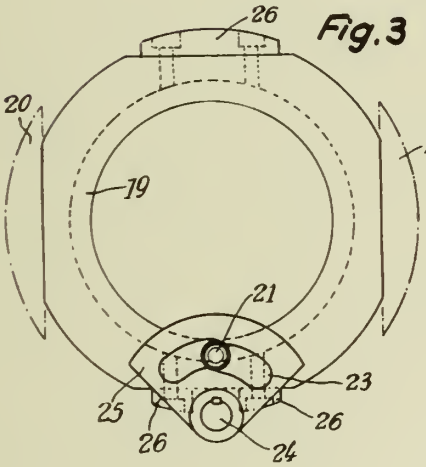

Fig.4

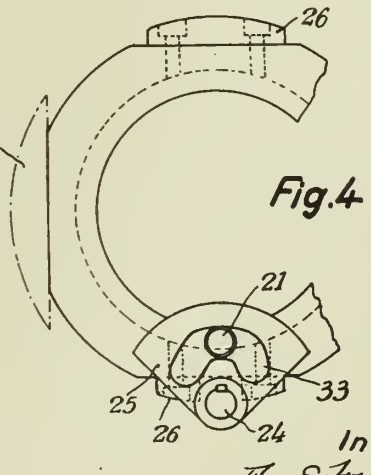

Inventor,
E. Sturm

By
Glascock Downing & Seebold
Attorneys.

Published May 25, 1943

Serial No. 306,027

ALIEN PROPERTY CUSTODIAN

PRINTING DEVICE FOR SCALES

Alfred Sessler, Berlin-Adlershof, Germany; vested in the Alien Property Custodian

Application filed November 24, 1939

This invention relates to weighing scales and especially to such scales in which the result of every weighing operation is recorded by a printing mechanism.

A feature of the invention resides in the single disc or carrier which is provided in its flat surface with step-like cuts or stamped out portions at different radial distances corresponding to the different weights to cooperate with a plurality of feelers or setting members.

Another feature of the invention resides in the fact that the single disc is made of exceedingly thin material and a reinforcing member is provided to counteract the force of the feelers contacting the side of the disc, to prevent any bending of the disc.

A still further feature of the invention resides in the locking details to lock the disc in a specific weight position to prevent further rotation of the disc and thus ensure an accurate setting of the feelers to print the specific weight.

The invention also contemplates the feature providing the disc with cut-out steps corresponding to gradually increasing values (1, 10, 100 . . .) arranged in radially increasing distances from the center of the disc and the highest values form the peripheral edge of the disc.

Further details and features of the invention will be apparent from the following description taken in connection with the drawings illustrating an example of the invention and in which:

Figure 1 is a front view, partly broken away, of a weighing scale with printing mechanism,

Fig. 2 is a side view of Fig. 1,

Fig. 3 is a plan view on a larger scale of the printing mechanism with the casing broken away,

Fig. 4 is a sectional view through the printing mechanism taken on line IV—IV of Fig. 3,

Fig. 5 is a plan view on an enlarged scale of the feelers and the locking bar in contact with the disc,

Fig. 6 is a side view of the structure of Fig. 5,

Fig. 7 is a detail view of the disc and locking bar, and

Fig. 8 is an elevation of the disc.

The weighing scale 1 has the usual indicating hand 2 mounted on a shaft 3, the latter being in operative connection with the usual mechanism to the pan or plate on which the article to be weighted is placed. In the example illustrated this connection includes a pinion 35 on the pointer shaft 3 and a toothed rack 36 controlled by the swinging weighing system of the scales. Also as usual the hand 2 cooperates with a series of weight units to visibly indicate the article weighted but such details do not form any part of the present invention. The actual invention of this application resides in the printing mechanism and more particularly in the means for setting the actual printing mechanism to print the individual weight amount.

The setting mechanism for the printing device comprises a thin sheet metal disc 4 provided with cut-out portions forming stepped stop sections 5, 6 and 7. The disc 4 may be stamped out in any usual manner and in the form illustrated in Fig. 4 the stepped stop section 5 may indicate the units, the sections 6 the tens and the section 7 the hundreds. For instance, each unit section has ten groups of ten stops, that it, a stop for each unit, the tens section 6 has ten stops and the hundreds section 7 has five stops to a maximum of five hundred. Such a series of divisions and sub-divisions may be used for metric weight measures but for ounces and pounds the sections 5 be divided into fifteen stops, the sections 6 into nine stops and the section 7 into four stops.

The actual printing mechanism is composed of a plurality of type wheels 8 rotatably mounted on a shaft 9 of which the latter is mounted in a casing 10 provided adjacent the scale. Each type wheel 8 has a pinion 11 secured thereto to rotate therewith and each pinion meshes with a toothed rack 12. For units, tens and hundreds there are three type wheels of which wheel 8′ has numeral types (0, 1, 2, 3, 4, 5, 6, 7, 8, 9), wheel 8″ has numeral types (0, 1, 2, 3, 4, 5, 6, 7, 8, 9) and 8‴ has numeral types (0, 1, 2, 3, 4). The foregoing is merely stated as an example since any scale of numbers can be used depending upon the specific weights which are used and the type of materials for which the scale is designed.

Each toothed rack 12 has a feeler or stepped bar 13 secured thereto of which feelers 13′ and 13″ have 9 stepped notches for the units, 13″ has 9 stepped notches for the tens, and 13‴ has five stepped notches for the hundreds. These feelers 13 are adapted to slide in guide bars 14 and 14′ mounted on plates 15 of the casing 10. Each feeler is provided with a pin 16 mounted thereon to which one end of a tension spring 17 is secured, the other end of the spring being secured to a bar 18 secured in the casing. Also each feeler 13 has a lug 19 secured on the under side thereof, Fig. 4, which abuts, and cooperates with a bar 20, on and secured to the setting rack 21, the bar 20 extending over all the feelers.

The operating device for printing a weight value includes an operating handle 22 mounted

on a shaft 23 rotatably mounted in the casing 10. On the shaft 23 there is securely mounted a gear 37 which meshes with a gear 39 mounted on the shaft 38. The shaft 38 is mounted in the casing 10 and a cam 24 is mounted on this shaft which cam is in contact with a roller 41 mounted on one end of a double-armed lever 31 pivoted at 32. The other end of the lever 31 carries a printing plate 30. The shaft 32 around which the double-armed lever 31 rotates is mounted in the casing 10.

The gear 37 on the shaft 23 is in mesh with a gear 42 which latter is securely mounted on the shaft 43 which is also mounted in the casing 10. On the other end of the shaft 43 there is mounted a gear 26 which is mesh with a gear rack 21.

On the shaft 23 there is mounted a cam 25 which operates, together with the arm 45', a double-armed lever 45 which is rotatably mounted at 44 in the casing 10. The other end 45'' of this lever lies against a projection 46 on the underside of a toothed rack 34. The rod 34 is bent at 33 at an angle and the angular part 33, which forms a V-shaped counter holding device or reinforcing bar for the disc 4, is adapted to contact behind the disc. As shown on the drawing, particularly Fig. 6, the reinforcing bar 33 is provided with a slot 47 which makes it possible to permit the penetration therethrough of the feelers 13. To prevent the bending of the disc 4 when the feelers 13 are in contact therewith the reinforcing bar is moved into contact with the disc 4 shortly before the feelers actually contact the disc. The reinforcing bar thus takes up the pressure and force of the feelers so that the disc can be made of extremely thin metal, which has the advantage that the scales will quickly come to rest upon each weighing operation. Apart from this the reinforcing bar makes it possible to set a feeler accurately. The locking bar 27 is slidably mounted in the guide bars 14 and 14' and is adapted to contact in any one of a plurality of notches or V-shaped grooves 28 provided circumferentially around one side face of the disc 4. The bar 27 is also provided with a lug 19 and with a spring 29 secured at one end to the bar 27 and the other end on the rod 18.

The device operates as follows:

It is assumed that an object or material is weighed which has a weight of 247, the actual measure of weight being immaterial for purpose of illustration. Immediately upon placing the 247 weight object on the scales the hand 2 comes to rest to visibly indicate 247 at the same time that the disc 4 rotates with and comes to rest simultaneously with the indicating hand. Then the operator of the scales rotates the hand crank 22 counter-clockwise, Fig. 4, which results in a rotation of the shaft 23. Thereby the cam 25 will press on the free end 45' of the double-armed lever 45, so that this lever will be rotated counter-clockwise around its shaft 44, Fig. 4. The free end 45'' of the lever 45 will press the lug 46, and therewith the toothed rack 34 against the tension of a spring 34', which has one end secured on the guide bar 14' and the other end on the rack 34, to the left, Fig. 4, so that the reinforcing member 33 will be likewise moved to the left, that is after the disc 4 has moved to its position. If the cam 25 has moved the double lever 45 so far that the free end 45' of this lever lies opposite the cam 25, then the reinforcing bar 33 will come to rest against the rear side of the disc 4.

Simultaneously with the rotation of the cam 25 a rotation of the gear 26 will also take place upon rotation of the hand crank 22 through the gears 37, 42, whereby the toothed rack 21 will be moved to the right, Fig. 4. Thereby the bar 20 mounted on the toothed rack 21 and the locking bar 27, will be released from the pins 19 mounted on the underside of the feelers 13', 13'', 13''', so that the feelers and the locking bar will be moved toward and into the disc under the influence of the springs 17 and 29.

The device operates in such a manner that the locking bar proceeds ahead of the feelers, and somewhat simultaneously comes in contact with the reinforcing bar of the disc. By means of the locking bar the disc will be arrested while the reinforcing bar prevents the bending of the thin disc. Then the feelers contact the respective stepped cut-out portions in which feeler 13''' for the hundreds contacts the "2" step, the feeler 13'' for the tens contacts the "4" step and the feeler 13' contacts the "7" step, as indicated in the position of the feelers in Fig. 5 which corresponds to the position on the disc on line V—V of Fig. 8. During the time that the feelers are setting each rack 12 secured to a feeler will properly set the type wheels. Immediately that the feelers are set the further rotation of the handle 22 will cause the cam 24 to rock the lever 31 to force the cord or paper sheet or strip against the type wheels 8 to thus print the weight 247 thereon. The parts are then returned to their initial positions by rotating the handle 22 in the clockwise direction back to the position of Fig. 1.

The present application is a continuation-in-part of my co-pending application Serial No. 165,982, filed September 27, 1937.

ALFRED SESSLER.

PUBLISHED

MAY 25, 1943.

BY A. P. C.

A. SESSLER

PRINTING DEVICE FOR SCALES

Filed Nov. 24, 1939

Serial No.

306,027

3 Sheets-Sheet 1

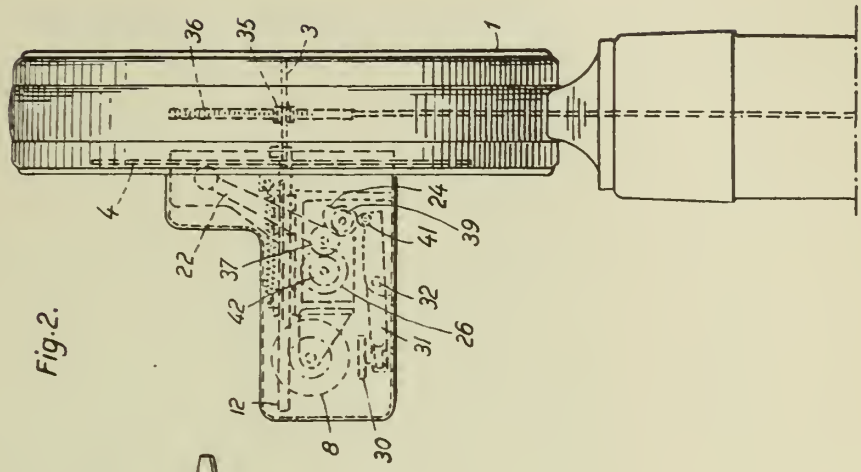

Fig. 2.

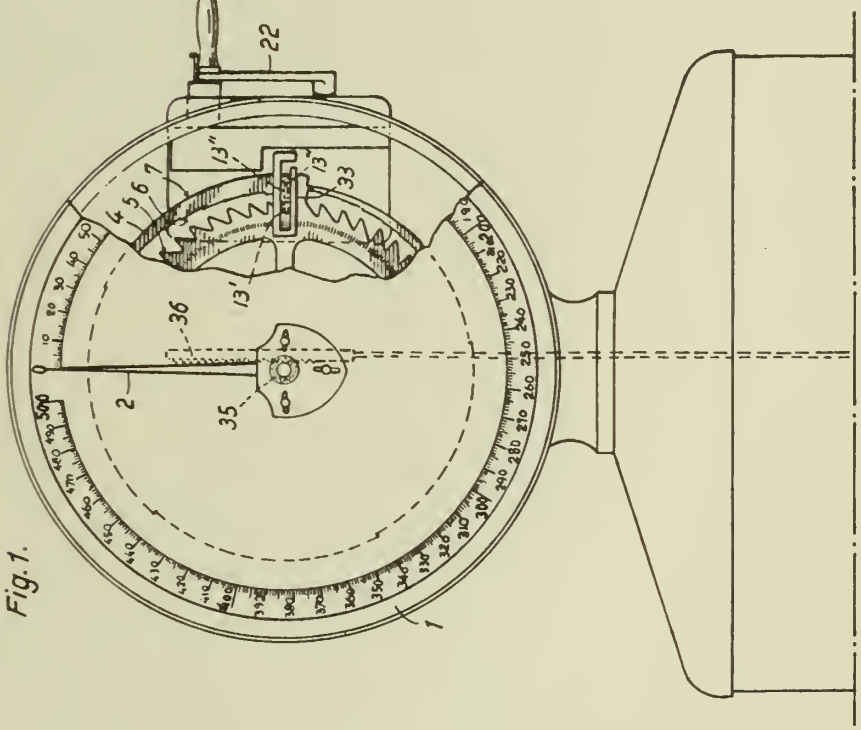

Fig. 1.

Inventor:
Alfred Sessler
By Young, Emery & Thompson
Attorneys

PUBLISHED
MAY 25, 1943.
BY A. P. C.

A. SESSLER
PRINTING DEVICE FOR SCALES
Filed Nov. 24, 1939

Serial No.
306,027
3 Sheets-Sheet 2

Fig. 3.

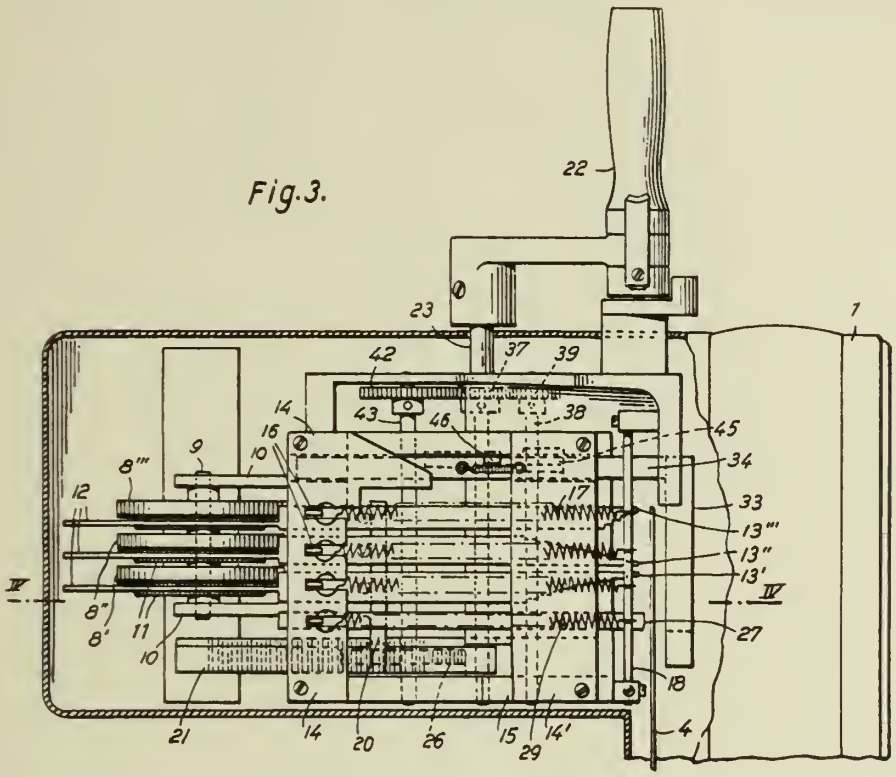

Fig. 4.

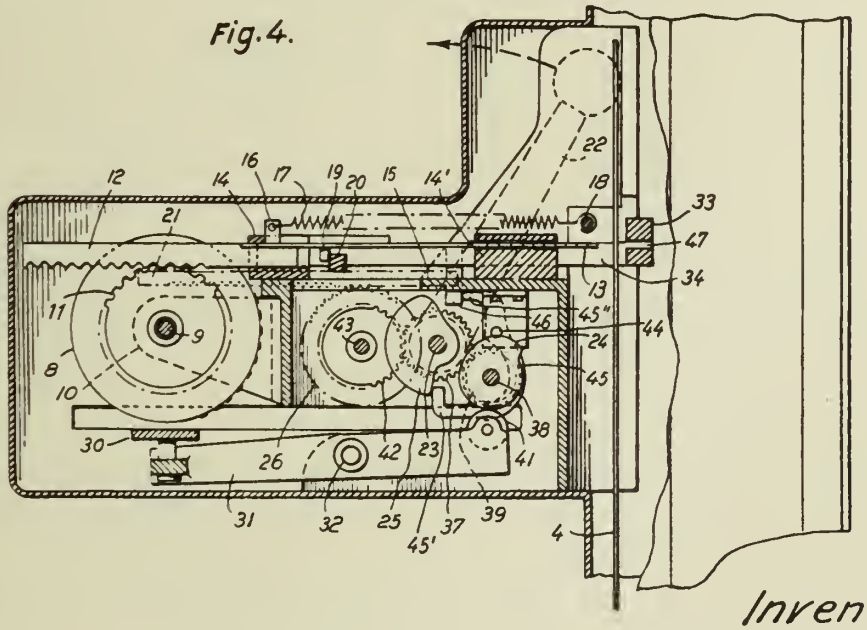

Inventor:
Alfred Sessler
By Young, Emery & Thompson
Attorneys

PUBLISHED
MAY 25, 1943.
BY A. P. C.

A. SESSLER
PRINTING DEVICE FOR SCALES
Filed Nov. 24, 1939

Serial No.
306,027
3 Sheets-Sheet 3

Fig.5.

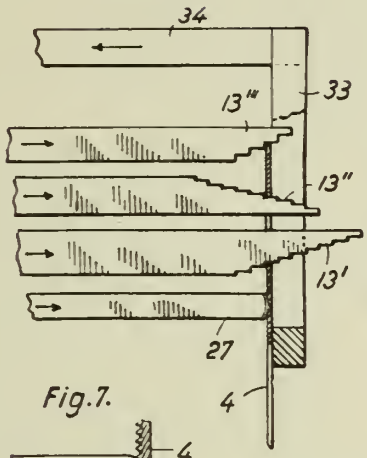

Fig.6.

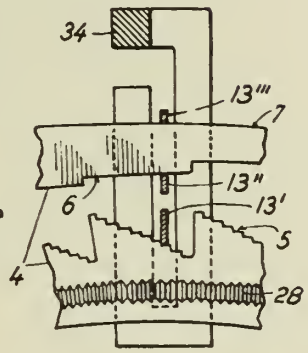

Fig.7.

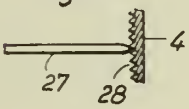

Fig.8.

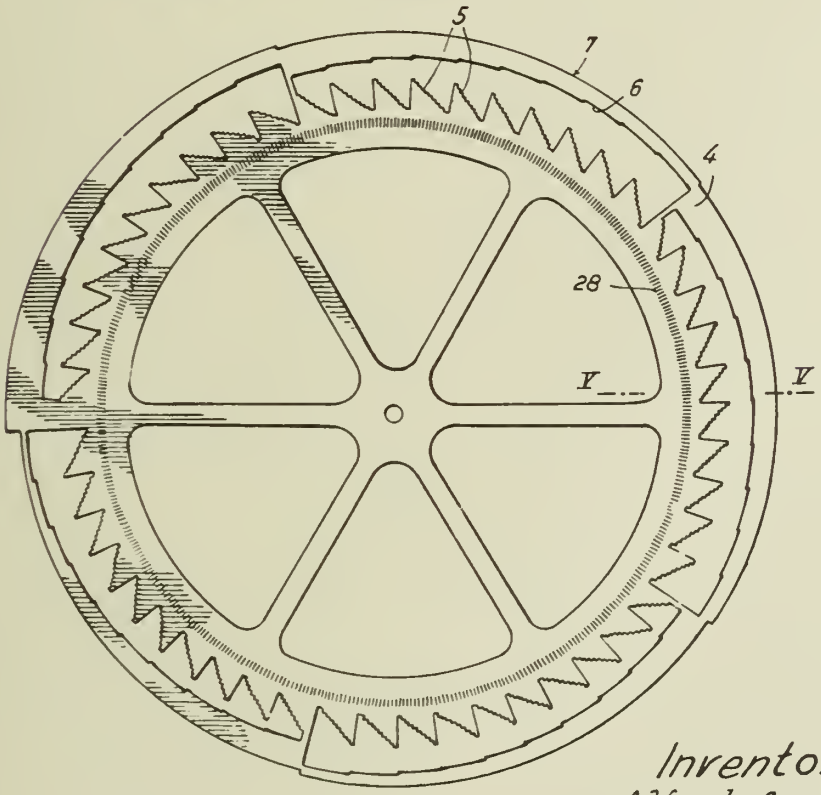

Inventor:
Alfred Sessler
By Young, Emery & Thompson
Attorneys

Published May 25, 1943

Serial No. 306,413

ALIEN PROPERTY CUSTODIAN

PROCESS FOR THE PRODUCTION OF NITROGEN-PHOSPHORIC ACID COMPOUNDS

Rudolf Watzel, Mannheim, Germany; vested in the Alien Property Custodian

No Drawing. Application November 27, 1939

The invention relates to a process for the production of nitrogen-phosphoric acid compounds having water-softening qualities.

It has already been endeavored heretofore to produce similar compounds by starting from gaseous ammonia and solid phosphorus pentoxide. Apart from the fact that this process offers technical difficulties in its application it has the disadvantage that the reaction occurring in connection therewith takes place partly non-uniformly and partly incompletely, resulting in producing various products of varying composition and very slight yield. Besides, the products thus obtained further contain impurities consisting of by-products and unaltered initial material, smelling in watery solution strongly of phosphoretted hydrogen.

Now the surprising discovery has been made that homogeneous nitrogen-phosphoric acid compounds of high yield are obtained by reacting nitrogeneous organic compounds, such as urea, nitriles, acid amides, derivatives of carbamic acids or hexa-methylene tetramine, with phosphoric acids, such as ortho-, pyro-, poly- or meta-phosphoric acids under heating.

As mentioned above it was usual in the production of such or similar products to start from P_2O_5 and gaseous ammonia. These substances, which were considered as especially reactive, have doubtlessly been selected in order to obtain as well defined and energetic course of reaction as possible. But if by using P_2O_5 and gaseous ammonia the reaction takes place in such unsatisfactory manner, it could not be expected in any way that so well defined and complete a reaction could be obtained when using the considerably more inactive reactants, such as urea, nitriles, acid amides, derivates of carbamic acids and hexamethylene-tetramine on the one hand, and the phosphoric acids on the other hand.

In carrying out the process according to the invention the following method is used:

The primary materials, e. g. urea and a polymeric metaphosphoric acid, are mixed and heated in equimolecular or any other proportion. After the initial melting of the reaction mass there begins at a temperature of about 120–140° development of gas gradually intensifying. Carbon dioxide is escaping first, followed by the development of ammonia. The end of the reaction is indicated by intense foaming and turning into a solid white and porous mass, which may be easily powdered after cooling.

The products of the reaction vary from such of weakly acid to such of neutral character, depending on the composition of the starting mixture. It seems that a part of the ammonia liberated during the reaction is used for neutralizing the acid groups. When using more than molecular proportions of urea, less acid products will be obtained, which is likely to be due to the decomposition to some extent of the excessive urea and addition to acid groups. On the other hand, there will be obtained products of higher acidity when using lesser proportions of urea.

The reaction products are soluble in water and are capable of linking metal ions into complex state. They may also be used in the form of their alkaline salts or ammonia salts.

When heating the products more or less after the reaction has been completed, further separation of NH_3 will take place, whereby with increasing degree of heating the water solubility of the so treated product will decrease and the ability of changing metal ions into complex linking will increase. While at present it appears to be scarcely possible to ascribe a definite constitutional formula to the products of reaction, they may, on the other hand, be regarded as well characterized insofar, as the reaction will always take place well definedly and completely and that the products of reaction of the same condition, same kind, same proportion of the primary materials, and same degrees and duration of heating will always show the same qualities. The products seem to be highly polymeric substances, whose degree of polymerization obviously increases with rising temperature giving off NH_3.

Example 1.—30 g. of a polymeric phosphoric acid, obtained by dehydrating ortho phosphoric acid, and about 88% P_2O_5 are thoroughly mixed with 60 g. of urea, resulting in slight heating. The mixture is then slowly heated, first until melting begins and then up to 140°, whereupon reaction sets in accompanied by intensive development of CO_2. Development of NH_3 begins with continued reaction, finally followed by foaming of the product of reaction forming a white and porous mass which is powdered after cooling to give 106 g. Formula and constitution of the product not being known, exact calculation of the yield was impossible, but it is likely to correspond to a theoretic one considering the developed amounts of carbon dioxide and ammonia.

Example 2.—110 g. of 89% H_3PO_4 are mixed with 60 g. of urea and heated to 135°. Reaction sets in under intensive foaming and is completed by maintaining a heat of 200° for several hours,

After having been cooled the product of the reaction is pulverizable and has a composition and water-softening qualities similar to those of the products obtained by using anhydrous phosphoric acid.

Example 3.—50 g. of crystallized H_3PO_4 are dissolved in 20 g. of acetonitrile and refluxed at 150° for 5 hours. The acetic acid formed is then distilled. The yellowish tough mass is soluble in water and after neutralization shows water-softening qualities.

Example 4.—89 g. of ethyl urethane and 80 g. of anhydrous phosphoric acid of about 88% P_2O_5 content are gradually heated to 180° and maintained at this temperature for 1–2 hours. After neutralization the product also shows water-softening qualities.

It is to be understood that the process according to the invention is by no means limited to the compounds mentioned in the examples. As a matter of course also other nitriles, acid amides and derivates of carbamic acids may also be reacted with the various phosphoric acids.

RUDOLF WATZEL.

Published May 25, 1943 Serial No. 306,424

ALIEN PROPERTY CUSTODIAN

SYSTEM OF CONSTRUCTING AIRCRAFT ELEMENTS

Otto Oeckl and Rudolf Koch, Berlin, Germany; vested in the Alien Property Custodian

Application filed November 27, 1939

This invention relates to a novel system of constructing elements or parts of airplanes of the type comprising an interior skeleton or frame work for the transmission of a substantial portion of the mechanical forces, and an outer cover in the form of a sheet or foil of metal, texture, plywood or artificial material.

It is an object of the present invention to construct the parts of airplanes which must have a favourable aerodynamical shape, such as, wings, fuselage, rudder, tail plane, fin and the like in such a manner that the manufacture is rendered cheap and simple.

A special object of the invention is to render it possible to produce the said elements substantially by a pressing operation, from one or a few pieces of sheet material.

Another object of the invention is to permit the production of large component parts in die presses so as to ensure great accuracy of the parts as to their shape and dimensions.

Still another object of the invention is to reduce the weight of the finished parts, the labour required for their manufacture and assemblage and to avoid or simplify the device required for the assemblage of the parts.

Another object of the invention is to render it possible that all stays or struts of one constructional part or element can be made from a single integral piece of material, in a pressing operation.

Still another object of the invention is to form also the longitudinal spars of profiled parts of airplanes integral with the framework thereof by a pressing operation.

With these and further objects in view, as may become apparent from the within disclosures, the invention consists not only in the structures herein pointed out and illustrated by the drawings, but includes further structures coming within the scope of what hereinafter may be claimed.

The character of the invention, however, may be best understood by reference to certain of its structural forms, as illustrated by the accompanying drawings in which—

Fig. 1 is a perspective view of a framework for a wing, having the invention applied thereto.

Fig. 2 is a perspective view of a part of a fuselage framework.

Fig. 3 is a cross sectional view of the pressed piece of material for the wing framework shown in Figs. 1 and 4.

Figs. 4 to 13 are cross sectional views of various embodiments of frameworks for wings or rudders having the invention applied thereto.

Fig. 14 is a perspective view of a part comprising U-shaped spar portions pressed into the upper and lower frame surface.

Figs. 15 to 17 are cross sectional views of various further embodiments of parts provided with integral U-shaped spars.

Fig. 18 is a view of a point where the transverse and longitudinal creases cross each other.

Fig. 19 is a horizontal section, in perspective, through a spar on line VI—VI of Fig. 17.

Fig. 20 is a perspective view, partly in section, of a further embodiment, showing a wing element.

Fig. 21 is an end elevation of a wing part in which the spar portions are pressed into the upper and lower walls, in an opposing relationship.

Fig. 22 is a joint comprising a ball-shaped seat surface and a cap unit.

Fig. 23 is a plan view with parts broken away, of a detachable wing.

Fig. 24 is a cross sectional view of an embodiment comprising U-shaped spar portions pressed into the upper and lower walls of a wing part or the like and U-shaped connecting members between said spar portions.

Fig. 25 is a connecting member for connecting the single wing parts to a composite wing.

Fig. 26 is a plan view of a wing consisting of one piece.

Fig. 27 is a cross sectional, perspective view of the wing shown in Fig. 26.

Similar reference numerals denote similar parts in the different views.

Referring now to the drawings in greater detail, and first to Figs. 1, 3 and 4, it will be noted that the whole frame work consists of two parts only, i. e., a sheet **2** which is folded at the rear edge **1** of the wing and a sheet **3** forming the nose of the wing. As best shown in Fig. 3, the sheet **2** which may be apertured at **60** as shown in Fig. 1 is first formed with the projecting edge **1** and with the bent over portions or flanges **2'**, **4** and **5** in a swage or die, then the two parts of sheet **2** thus formed are folded into the shape shown in Figs. 1 and 4 and connected at **4**, near the rear end of the wing, and at the flanges **5**, by rivetting. The front arch **3** which has been separately pressed is now connected to the member **1**, **2**, **5**, at the points **6** and **7**, where the member **1**, **2**, **5** may be recessed as shown, by means of rivetting.

It will thus be clear that the framework consists of two parts only made by simple die-pressing operations and is formed with a continuous spar **5**, **6**, **7** and a number of ribs **2'**, which are additionally connected spar-fashion at the points **4**. The framework is additionally

stiffened by the creases 61 and 62 provided in the sheets 2 and 3, respectively. The framework thus formed is subsequently provided with the outer covering of thin metal sheet or the like to form the complete wing or like part.

Referring now to Fig. 2, this figure represents a fuselage framework. As shown, a length of the said fuselage framework consists of a single sheet of metal material which is formed with apertures 63, flanged portions 64 at the edges of said apertures, flanged portions 3 at the ends of the sheet and with creases 65 and 66 intermediate the apertures, by simple pressing operations. The sheet thus cut and pressed is now bent round to assume the desired shape and the adjacent end edges of the sheet are connected, for instance, by riveting. It will be understood that the cutting and die pressing operations prior to the bending operation can be made with simple tools and especially with a flat die and that the bending operation is also facilitated by the longitudinal creases 66 in the sheet. Thus, a complete rib system is formed of a single, integral piece of material.

Various further modifications of a wing framework of the type shown in Fig. 1 are shown in the Figures 5 to 13. Referring first to Fig. 5, the framework consists of a single sheet of material 10 which is bent at the nose and connected at its ends at 67, by riveting, and a U-shaped spar 11 inserted between the upper and lower portions of the sheet 10 by riveting.

The structure shown in Fig. 6 comprises a sheet 12 which is formed integral with a nose and spar portion and a sheet 13. The two sheets are connected at 69 by riveting, spot welding or the like, and the flange at the upper end of the spar portion is connected to the upper portion of the sheet 12 at 69′ in the same manner. The embodiment shown in Fig. 7 is similar, but the portions 12 and 13 of Fig. 6 are in this case formed of a single, integral sheet which is bent over at 1′ as at 1 in Figs. 1, 3 and 4. The spar portion is in this case Z-shaped and connected to the wall portions at 14 and 15 in any suitable manner.

In the embodiment shown in Fig. 8, the nose and upper and lower walls are formed of a single, integral sheet 68 while the spar is formed by a separate U-shaped piece of profiled material 17. The adjacent ends of the sheet 68 are connected together at 16 and the spar 17 is connected to the upper and lower walls of the sheet 68 at 69 and 70.

Fig. 9 shows a modification similar to Fig. 8, but the spar is in this case formed at the end of the lower wall of the sheet. According to Fig. 10, each end of the sheet 71 is formed with a spar portion and the two spar portions thus formed are interconnected at 72 and connected to the upper wall of the sheet 71 at 73 and 74.

Referring to Fig. 11, the wing part consists of four pressed sheets 75, 76, 77, 78 forming the nose, the upper and lower walls and the tail of the wing. The upper and lower walls are formed with end portions 79, 79′, 80 and 80′ thus providing a spar.

Figs. 12 and 13 have special reference to tailplanes comprising stationary fins 81 and movable rudders 82. The stationary fin comprises an integral pressed and curved sheet 83 and a U-shaped spar 84 secured therein. The rear ends of the sheet 83 may be connected by means of symmetrical bent-off portions and flanges on both ends, as shown in Fig. 12, or by means of a bent-off portion and flange on one of the ends secured to a straight face on the other end, as shown in Fig. 13.

It will be noted that in the preceding figures the spar is formed by inwardly bent end portions of the pressed sheet or by additional U- or Z-shaped members inserted therein. According to a further important feature of the invention, the spar may be formed by U- or V-shaped depressions in the pressed sheet whereby the strength of the constructional part is further augmented. Embodiments of this kind will now be described with reference to Figs. 14 to 17 in which the constructional part is formed by an upper frame member 101, a lower frame member 102 and a profiled nose member 103. Longitudinal creases 104 and transverse creases 105 are pressed into the said members to stiffen the same.

The U-shaped depressions in the upper sheet member 101 are designated 107 and 108 while the U-shaped depressions in the lower members 102 are designated 109 and 110. The two members 101 and 102 are connected at their rear ends at 111 and by the bottom walls 107′, 108′, 109′ and 110′ of the spar portions which engage the respective opposite member and are secured thereto by riveting, welding or the like. The modifications shown in the Figures 14 to 27 will now be described as to the differences in their construction.

Referring first to Fig. 14, the front or nose member 103 is secured to the free flange of the U-portion 107 and to the bottom portion 107′ of the same. According to Fig. 15, in which only the member 101 is provided with spars, the joints 112 and 113 between the nose member 103 and the members 101 and 102 are provided more to the front end while according to Fig. 16 two strong spars are obtained by the spars 107, 110 and 108, 109, respectively, which are arranged close together and only the lower joint 113 is displaced with respect to the bottom 107′ of the spar 107 and according to Fig. 17, the nose member 103 extends over the spar 107 and is connected to the member 101 at 114.

Fig. 18 shows a crossing point of a transversal and a longitudinal crease 105 and 104 in a member 101 or 102 and Fig. 19 shows similar creases 115 in the spar 107 of Fig. 17.

It will be understood that in the embodiments in which the spar are formed by U-shaped depressions of the pressed sheets proper, the frame thus formed in order to form a closed static system for withstanding torsional forces requires additional means closing the upper gaps of the U- or V-shaped spars. Various embodiments illustrating such additional means are shown in Figs. 21, 22, 25 and 27.

The torsional strength of the constructional part may be obtained, for instance, by the covering 46 which is riveted to the frame elements, as shown in Fig. 20. However, in order to reduce the weight of the part, we prefer to use a very light covering and to provide additional strips 45 inserted in, and secured to, suitable recesses or depressions of the pressed sheet and forming a box spar or girder together with the U-shaped portions.

Fig. 21 shows a modification in which an integral pressed sheet is bent round to form the profile and formed with U-shaped depressions in the upper and lower walls having half the total depth of the profile only and engaging each other half way between the outer walls for connection

by bolts and nuts **48**. The two free ends of the pressed sheet are connected at **120**.

Where the profile is very high, or it is intended to use relatively flat pressed sheets, intermediate spar members may be inserted between the U-shaped depressions in the pressed sheet, as indicated at **49** in Fig. 24, and connected thereto by rivets **50**. In this embodiment, profiled U-shaped section members **47** are inserted in the U-shaped spar portions to close the same and the element is formed of an integral pressed sheet which is bent at **51** while the seam is provided at **52**.

The interconnection between the single constructional elements thus formed and between the unit of said elements and the body or fuselage of the airplane may be effected in various manners.

For example, as shown in Figs. 20 and 22, U-shaped fitting members **33** secured within the U-shaped spar portions may be formed with threaded projections **36** at their ends for engagement with a threaded sleeve member **39** which by means of an inner flange engages over an outer flange of a projection **37** on the opposing U-shaped member **33** of the adjacent constructional element.

By way of alternative, or in addition to the said joints **33**, **34**, **36**, **37**, **38**, **39**, there may be provided fitting members **41** and **44**, Fig. 25, formed with eyelets or lugs **42** and forked lugs **43**, respectively, which are connected by bolts and nuts **40**. Advantageously, each wing element is provided on the front spar with a joint of this kind having a horizontal connecting bolt and on the rear spar with a connecting bolt having a vertical connecting bolt.

It is also possible, moreover, to transmit the torsional forces from the covering to the connecting points by means of ribs **35** as shown in Fig. 21.

As shown in Fig. 23, the constructional elements **30** forming the wing may be connected with each other and with the fuselage by joints **31** as shown in Fig. 23, in such a manner that a gap is left between the adjacent elements which is then closed by additional covering strips **32** or in the manner shown in Figs. 26 and 27 where the constructional elements are provided in an overlapping relationship. In this case, the joints of the main elements are arranged at **54** while the joints of the supplementary elements are arranged at **53** in a staggered relationship. End pieces **150** are provided to complete the wing or like part of the airplane.

It will thus be understood that the invention discloses a novel system of constructing box shaped elements or frame structures forming the support for the foil covering of parts of aircrafts, such as, wings, tail planes, rudders, fins, fuselage and the like which covering bears directly on the respective support. The particular features of the invention reside in the fact that the support consists of a single sheet, or a few sheets, the main surface of which is accommodated to all faces of the aircraft part and forms coherent surfaces on which the thin foil representing the covering may be supported. Moreover, the sheet or sheets are reinforced by one or a few longitudinal girders or spars which are preferably formed of inwardly bent-off portions of the sheet, in a pressing operation, or of separate girder members connected to such bent-off portions. Furthermore, it is an important feature of the invention that the transverse stiffening members or ribs are also formed of the said sheet, by inwardly pressing the sheet in the form of creases or flanges at the edges of cut out portions. This novel construction offers the advantage that the constructional element consists of one or a few parts only and that the foil covering may be very thin since it is well supported over its whole surface.

The method and apparatus of the present invention have been described in detail with reference to specific embodiments. It is to be understood, however, that the invention is not limited by such specific reference but is broader in scope and capable of other embodiments than those specifically described and illustrated in the drawing.

OTTO OECKL.
RUDOLF KOCH.

PUBLISHED MAY 25, 1943. BY A. P. C.

O. OECKL ET AL

SYSTEM OF CONSTRUCTING AIRCRAFT ELEMENTS

Filed Nov. 27, 1939

Serial No. 306,424

5 Sheets-Sheet 1

Fig. 1.

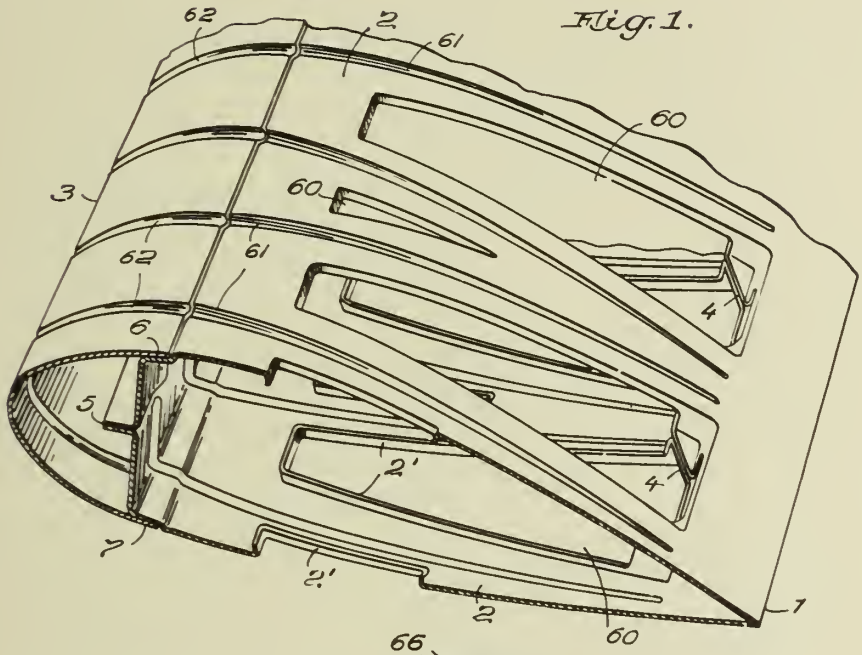

Fig. 2.

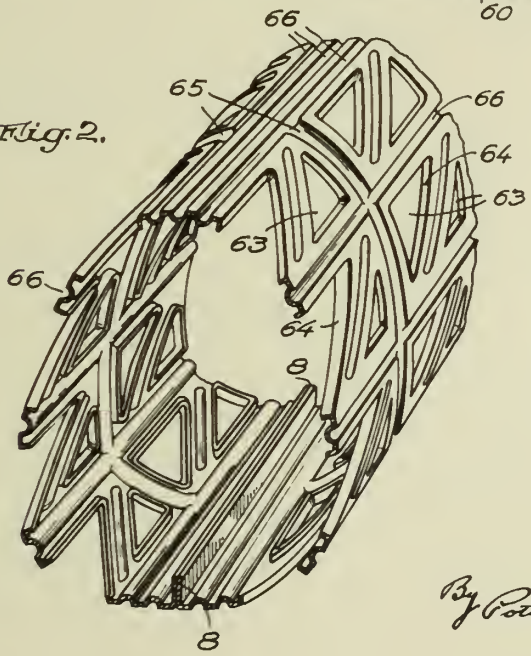

Inventors.
Otto Oeckl,
Rudolf Koch,
By Potter, Pierce & Scheffler,
Attorneys.

PUBLISHED
MAY 25, 1943.
BY A. P. C.

O. OECKL ET AL

SYSTEM OF CONSTRUCTING AIRCRAFT ELEMENTS

Filed Nov. 27, 1939

Serial No. 306,424

5 Sheets-Sheet 2

Fig. 3.

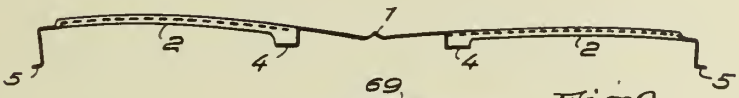

Fig. 4.

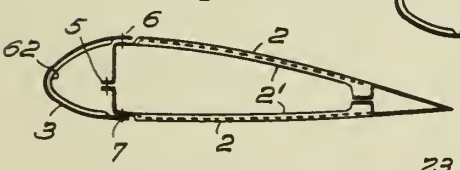

Fig. 9.

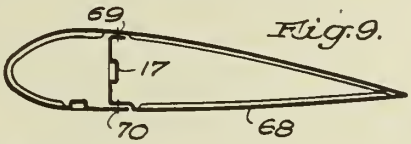

Fig. 5.

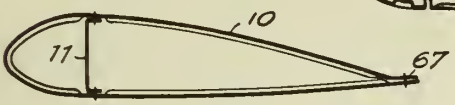

Fig. 10.

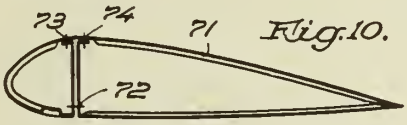

Fig. 6.

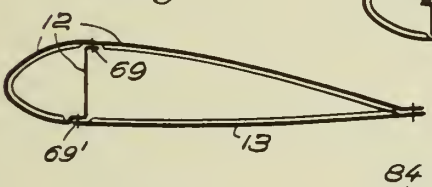

Fig. 11.

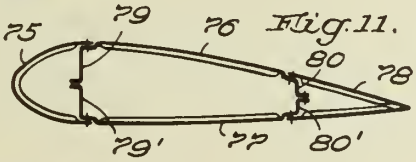

Fig. 7.

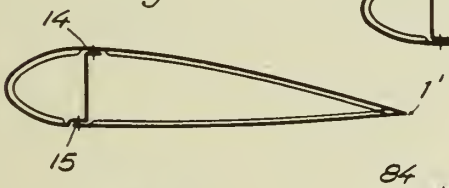

Fig. 12.

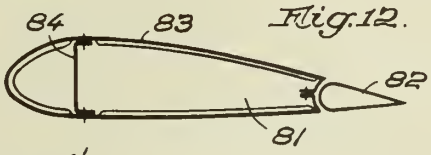

Fig. 8.

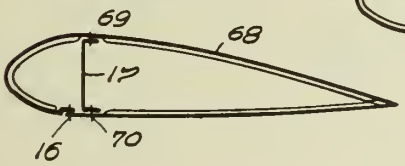

Fig. 13.

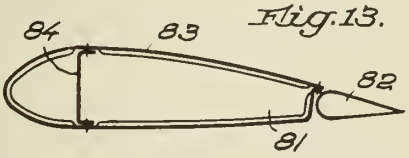

Inventors:
Otto Oeckl
Rudolf Koch,
By Potter, Pierce & Scheffler,
Attorneys

PUBLISHED
MAY 25, 1943.
BY A. P. C.

O. OECKL ET AL

SYSTEM OF CONSTRUCTING AIRCRAFT ELEMENTS

Filed Nov. 27, 1939

Serial No. 306,424

5 Sheets-Sheet 3

Fig. 14.

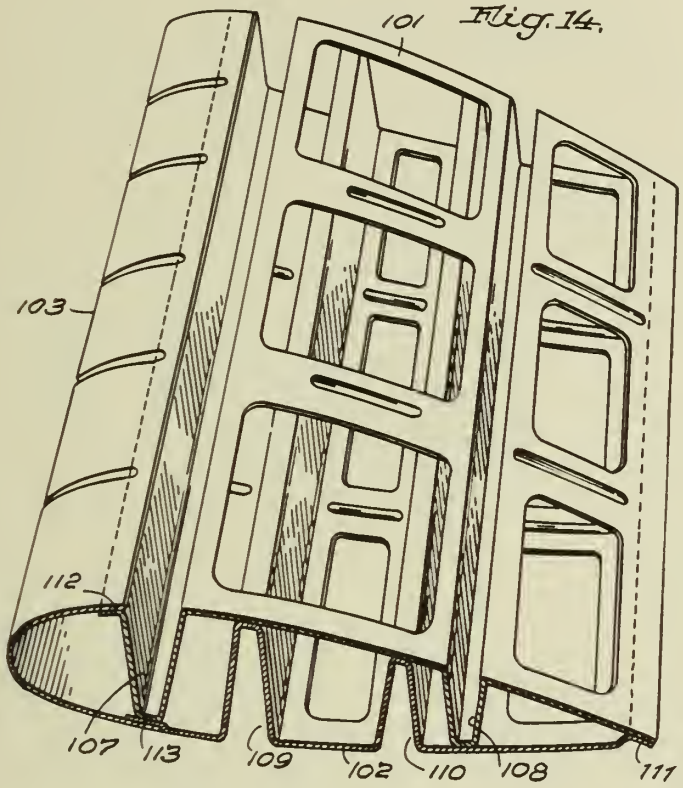

Fig. 18.

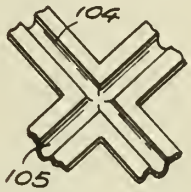

Fig. 19.

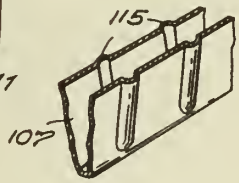

Fig. 15.

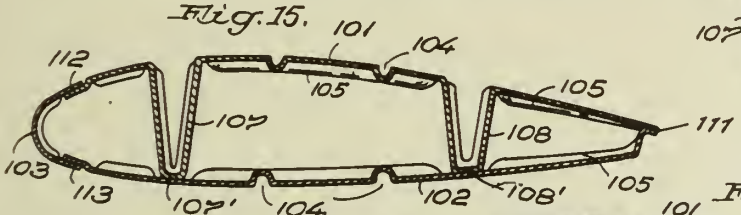

Fig. 16.

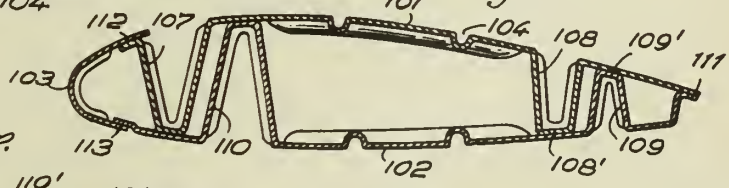

Fig. 17.

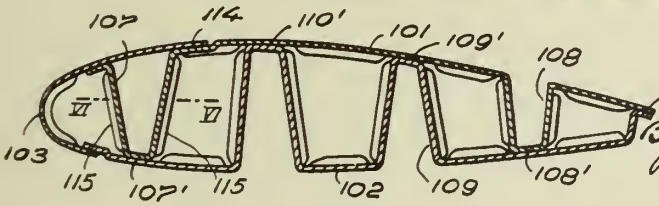

Inventors:
Otto Oeckl
Rudolf Koch,
By Potter, Pierce & Scheffler,
Attorneys

PUBLISHED

MAY 25, 1943.

BY A. P. C.

O. OECKL ET AL

SYSTEM OF CONSTRUCTING AIRCRAFT ELEMENTS

Filed Nov. 27, 1939

Serial No. 306,424

5 Sheets-Sheet 4

Fig. 20.

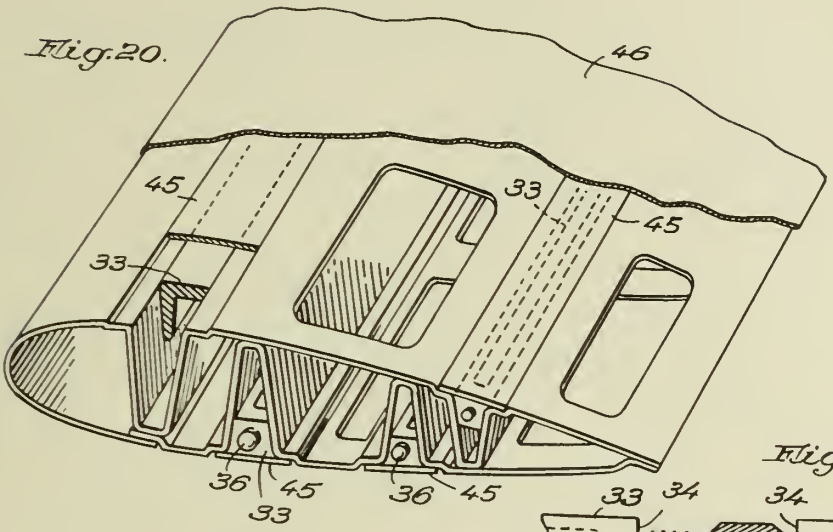

Fig. 22.

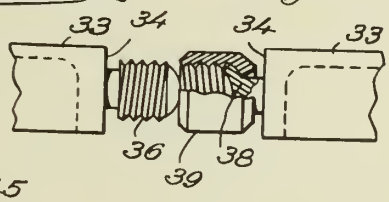

Fig. 21.

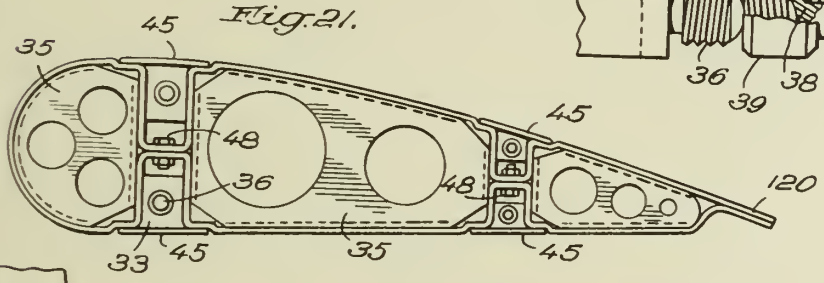

Fig. 23.

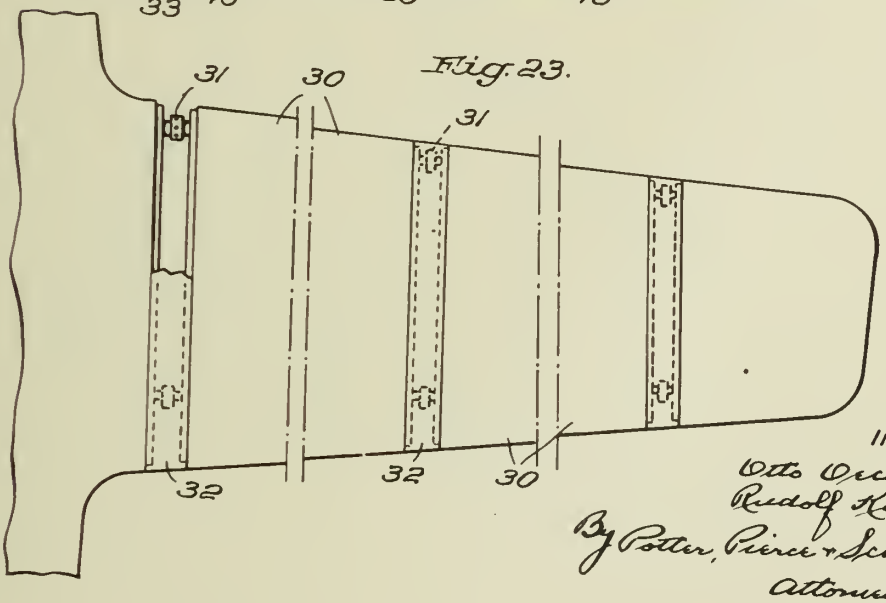

Inventors:
Otto Oeckl
Rudolf Koch,
By Potter, Prince & Schaffler,
Attorneys

PUBLISHED
MAY 25, 1943.
BY A. P. C.

O. OECKL ET AL
SYSTEM OF CONSTRUCTING AIRCRAFT ELEMENTS
Filed Nov. 27, 1939

Serial No.
306,424
5 Sheets-Sheet 5

Fig. 24.

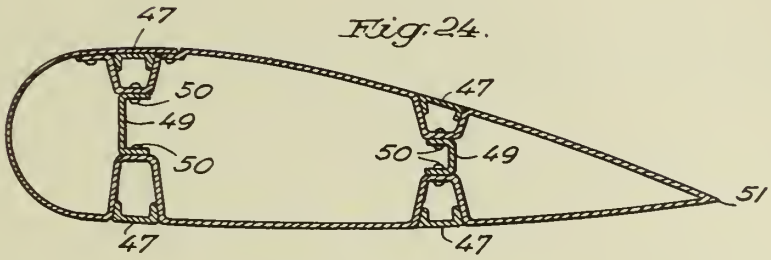

Fig. 26.

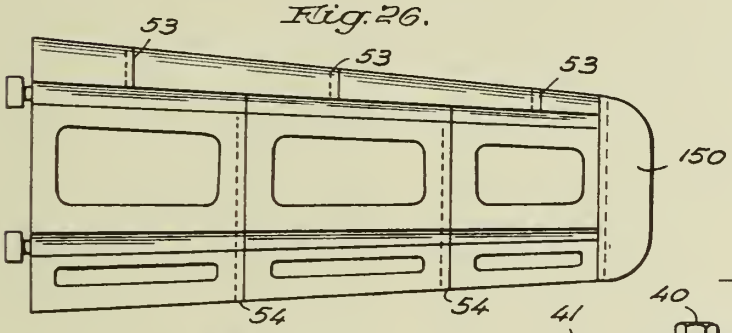

Fig. 25.

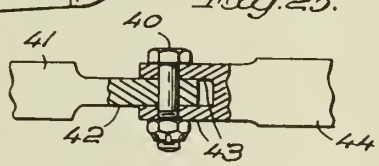

Fig. 27.

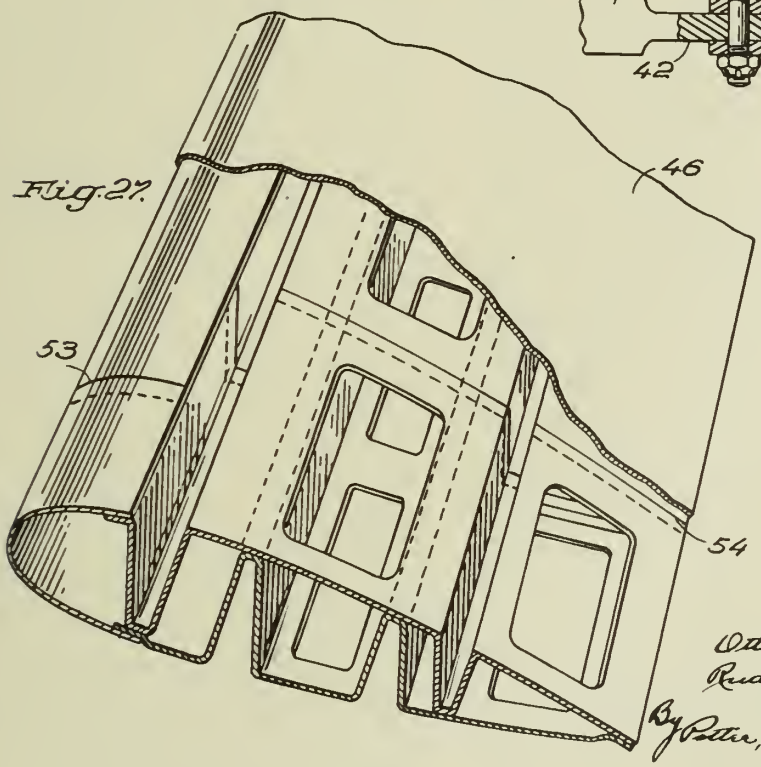

Inventors:
Otto Oeckl,
Rudolf Koch,
By Potter, Prince & Schaffler,
Attorneys.

Published May 25, 1943

Serial No. 307,509

ALIEN PROPERTY CUSTODIAN

COIN-WATERMETER

Frederik van der Plas, Bandoeng, Java, Netherlands East Indies; vested in the Alien Property Custodian

Application filed December 4, 1939

The invention relates to an apparatus, which can be fixed to every watermeter, so that the whole can act as a coin watermeter, whereby at the same time the consumed quantity of water can directly be read off from the watermeter.

A construction according to the invention consists in affixing a valve in the watermeter in the form of a membrane, which opens or closes the water supply, that is regulated by a bar or some similar arrangement that communicates with the liquid-meter by means of a revolving plate (dial) or a conformable device.

Explanation of the invention must be referred to the annexed drawings, whereupon for example and schematically, some execution forms according to the invention are given.

Fig. 1 shows partly a side view and partly a section of a coin-watermeter according to the invention.

Fig. 2 shows an upper view on the apparatus according to the invention of Fig. 1.

Fig. 3 shows the connection of the bar with the plate and the membrane in section, while in the conduit-pipe, a simple water wheel is affixed.

Fig. 4 shows a section of such a wheel.

Fig. 5 shows the coupling of the coin apparatus to the bar and the plate, according to the invention.

Fig. 6 to Fig. 14 show another device of the revolving plate given here below.

Fig. 15 shows a view along the line I—I of Fig. 5.

Fig. 16 is a modification which may be employed as a part coupling the bar to the plate according to the invention.

On Fig. 1, 1 shows a normal watermeter, while 2 shows the proper device according to the invention. This consists of a flat plate (2) which is fastened to the vertical axle 3. A valve (5) is connected to the coupling piece 4, to which valve on the other side is brought an iron-pipe 6, with stop cock 7, schematically mentioned. The arrow 8 shows the water direction, coming from the main net through valve 5, and watermeter 1 and leaving the instrument by 9. Axle 10 is brought outside with a packing-gland, such as is used by ordinary watermeters, through the closing-plate of the upper piece of the watermeter and drives through a transmission of motion 11, the counting mechanism 12, above on the watermeter.

On coupling piece 4 and iron tube 6, bridge 13 is fastened. On this bridge, the axle 3 is joined to axle 10 through a transmission of motion. As plate 2 is fixed to axle 3, this axle and also plate 2, will also assume a revolving movement through the transmission of 10 and 14, when the wing of watermeter 15 assumes such a movement. In plate 2 a small opening 16 is made, see Fig. 2, allowing an upper aspect on plate 2 and the counting-mechanism 12. This opening 16 corresponds with needle (bar) 17, which fits exactly in this opening. This needle 17 is connected to valve 5 which regulates the supply of the water. When needle 17 shoots upwards to hole 16 through a spring action 18 (see Fig. 3) the supply is shut off. If the needle 17 is again pressed down through the coin-management, then the water supply is opened; the flowing water brings the impeller 15, and through that also plate 2 in a revolving motion, the opening 16 is displaced and needle 17 is thus pressed only under plate 2, whether or not running in a groove. By this means the water supply is let open until opening 16 again appears above the needle 17, and through shooting of this needle 17 into this opening 16 the water supply is shut off. The quantity of water supplied for a coin-piece is thus fixed through one revolution of plate 2. This quantity can be read off from the watermeter. Conversely only one revolution of plate 2 can be adjusted to yield a certain quantity of water by the application of an adapted transmission. The valve 5 is a very old well-known device provided with a membrane, so that it does not need further discussion, especially as this device is nowadays applied to nearly all kinds of coin watermeters.

Fig. 3 shows a section of a case 21, of a water-impeller 20, valve 5 and needle 17 with plate 2 whilst Fig. 4 shows a section over the impeller 20 with the case 21. This is a simple water-meter meant for little water consumers. 19 is a membrane with which the water supply is opened or shut off.

Fig. 5 shows a coin apparatus. Fig. 5 is supposed to be a side-view on the coin apparatus with a connection to plate 2 by means of needle 17. 22 is supposed to be the canal placed between two ledgers 23 and 24 and between front-(25) and back-plate (26) into which the coin is dropped. After dropping the coin in the apparatus, it falls in the canal below and rests on the ridge 27 and a pawl 28. This pawl is revolvable on spindle 29 and is connected on its upper edge revolvably by a pin and hole 30 with needle 17. The lower edge of the pawl is bent in such a manner that the coin can be held. Through the spring 31 pawl 28 continually experiences an upward pressure, through which needle 17 remains on plate 2. Fig. 5 shows the manner in

which coin 42 is thrown into the coin apparatus and how it rests on ridge 27 and pawl 28, whereby the water supply is shut off, because needle 17 is pressed into hole 16.

When now button 32 is pressed, which button forms a whole with a slide valve 33, this slide valve 33 pushes the coin against pawl 28, with its left lower edge which is bevel-edged, this pawl gives way thus revolving round axle 29; when the space between pawl 28 and ridge 27 is wide enough, the coin drops down and is caught in a coin-box. In this position the needle 17 is just drawn so far downward that plate 2 gets free and membrane 19 in valve 5 is opened, so that the water flows through the meter thus revolving also the wingwheel 15 and consequently plate 2. When button 32 is loosened, plate 2 has revolved so far that needle 17 cannot again be pressed into hole 16 but remains pressed against the plate, leaving the membrane open through which the water remains flowing.

The construction of the slide-valve together with the appertaining spring device that serves to press button 32 back again, is elucidated in Fig. 15, which shows a section I—I in Fig. 5. Bow 36 keeps enclosed pipe 37, in which spring 38 is invested. A cam 39 is applied to the slide-valve 33 by means of a shaft 40. This shaft finds in groove 41, left open in pipe 37 and plate 25 an opportunity together with the slide (valve) to move to both ways. When button 32 is pushed to the left, through which valve 33, together with handle (shaft) 41 glides through the groove, the spring 38 is stretched through cam 39. When button 32 is released then spring 38 presses the cam, and with it slide (valve) 33 and button 32, back again to its former position.

Through the arrangement according to the invention, every grievance that until now adhered to the coin-watermeters, is eliminated. One advantage of this arrangement is, that it can be fixed to all common water supply net, and each consumer at his request can receive a coinmeter instead of an ordinary meter. When this is the case an arrangement according to Fig. 1 must be applied. At the end 9 (see Fig. 1) the house water pipe is connected, so that valve 5 and watermeter 1 are under pressure as cock 7 remains open and the taps in the house are closed. When now a coin is dropped into the apparatus, then the eventual leaking water will remain flowing through the valve along needle 17. This water must be exhausted for which pipe 42 is used, see Fig. 1.

This water is much less than each ordinary watermeter requires to start working. When we consider the fact that each water consumer has the opportunity to drain off a certain amount of water from under the wing by the usual well-known watermeter, by which the quantity is more than what passes the valve, then this leaky water does not play any important part, as this is only a trifling part of the water that is or can be usually consumed by the public by every watermeter. A second advantage is, that the quantity to be supplied is always the same, because there are no parts that can change the quantity. There is a pipe 6 (see Fig. 1) that supplies the water and a plate 2 that fixes the duration of the water supply. This is connected to a watermeter of a well-known sort, which is practically without defects by means of a motion 14, so that the faultless operating of the device according to the invention can be taken for granted, as was proved by experiments. The membrane closes accurately exactly on the liter. For this it is necessary that needle 17 and opening 16 be constructed without or with as slightly possible clearance.

To summarize, the following applications are possible with this coin watermeter:

a. The coin-meter is used by the public with sealed opened switch and a bendpiece to be able to receive water in buckets (see Fig. 3). Through this application the instrument remains practically without pressure. After each coin-dropping the supply of water takes place without any interruption. For this it is not necessary to use too expensive and accurate watermeters, and is the construction, that is given in this figure, sufficient.

b. The switch 7 (see Fig. 1) is sometimes used to drain off as much as may be required. In that case it is not sealed and is a construction with a good watermeter necessary as shown in Fig. 1.

c. The coin-meter is affixed in the stead of the usual common watermeter. In that case a construction as given in Fig. 1 is necessary.

The invention does not confine itself to this construction. Many variations are possible, by which needle 17 is pushed back to its original position after a certain number of revolutions from the wingwheel of a watermeter or another wheel. Some examples may serve as illustration:

The horizontally revolving plate 2 can be replaced by a revolving in vertical position or by a vertical ring with a hole in it, corresponding with needle 17. Also the supply of water can be stopped by the removing of a revolving pawl which holds down needle 17. This removing may be brought into effect by a cam fixed to an axle or a tooth-wheel which after one revolution, knocks off the pawl over the needle. By the pressing of button 32 the pawl can again be readjusted, for instance through a spring work, after the needle has been pulled down, as is shown above (see Figs. 6 to 14). The round plate 2 with the opening can in this way replaced by an arm 43 (Fig. 6) with opening 44. Pin 45 is affixed to a jaw 46, movable round axle 47, by which the pin 45 in the opening 44 of arm 45 can move in either direction. Pin 45 cuts through the opening 44 so that this pin protrudes from the bottom of the arm. By fixing a weak spring between arm 43 and jaw 46, pin 45 is normally held in place in the opening 44 as is shown on Fig. 6.

The pin 17 in case 48 (see Fig. 12 and 13) does not press any more by open membrane, against the revolving plate 2 but is held in the downward position through an arm 49 revolvable round 50 (see Fig. 12) to which is fixed a spherically spindle 51, on which at the bottom a movable hood 52 also spherically is affixed, that presses on pin 17, so that each friction by the movement is eliminated. whilst the arm 49 is held in downward position through a pawl 54 revolvable round 53 (see Figs. 9, 10 and 11). The connection of the coin arrangement with the liquid arrangement the arm 28 (see Fig. 14) does not work directly on pin 17 but on arm 49. When thus simultaneously with the pressure of the coin the liquid automatic device is brought in use, the downward pressure of the arm 28 (see Fig. 14) will also press downward arm 49 revolvable round 50 together with pin 17, by means of 51 and 52, so that the membrane is opened (see Fig. 12) while the arm 49 is held in downward position by pawl 54 (see Fig. 9).

By means of a weak spring pawl 54 is pressed against arm 49. When the water flows, arm 43 will start turning until pin 45 reaches knife 55 of pawl 54 (see Fig. 9). By this revolving arm 43

does not meet with any resistance. By continued turning of arm **43**, pin **45** will be pressed against the knife and remain there so that pin **45** passes through the opening **44** and that so long, until the opening **44** has entirely been passed through (see Fig. 7); at this moment pin **45** again will turn together with arm **43** and force aside knife **55** (see Fig. 10) till pin **45** has passed over the knife **55**. Already before this has happened pawl **54** is pulled away from arm **49**, so that **49** is pressed upward through **56** acting at the other end of **49** (see Fig. 11) thus releasing pin **17**, that bounds upward and stops the water supply (see Fig. 13). Pin **45** is then again brought back to its normal position in opening **44** by the weak spring (see Fig. 8) so that by the bringing into action of the automatic device, pin **45** can never prevent the fastening of arm **49** when this is pulled downward, because groove **44** has been extended far enough to enable pin **45** to come to rest sufficiently far from arm **49**. In this way little quantities of water can be drawn at all times, while arm **43** can turn with any degree of slowness because it does not experience any resistance. Only when the pin leans against the knife, a little resistance is experienced that will force pawl **54** from arm **49**. This friction can be limited to a very small degree. When the coin-watermeter is used for coins, through which a great quantity of water can be drawn, plate **2** must revolve very slowly. It might happen in that case that, after the pressure of the coin on button **32**, the plate has revolved so little that needle **17** still fits in opening **16**. A second plate of smaller size to be fixed to the Liter's wheel or a part of it, is in this case necessary, beneath which is also placed a needle, which however must be joined to the original needle **17**; this one will after the pressing of button **32**, quickly thus far be displaced that through the rebounding of button **32** the second needle will be pressed under against the plate by which also the principal needle **17** is held in the position "press down" for holding open the valve.

Another variation of construction of the plate consists in affixing a spiral-groove under in the plate, in which fits a pen or some similar device. The groove runs spiral by from the edge to the centre of the plate. When the plate revolves, the pen is drawn with it to the centre. This can happen for instance by fixing a simple slide **57** with pin **58** (see Fig. 16) to the vertical bar of pin **17** that can be moved to or from the centre of the plate in a radical direction, and that is drawn to its original position by a spring, as soon as pen **58** and together with it, the slide, is pressed or pulled downward out of the groove. The track of the slide is thus connected to pen **17**. At certain distance from the centre of plate **2**, pen **58** can bound into an opening exisiting there, through which the slide bounds together with needle **17** upward thus stopping the water supply.

For coinwatermeters from which per coin, a great quantity of water can be drawn, such a construction could be suitable. It is however recommendable to use coinwatermeters only for the supplying of such quantities of water supply, which are dependent on only one revolution of plate **2**.

Applicants construction preferably a membrane is used for the stopping of the liquid in the lead, while further more exclusively axle **17**, which acts on it, is used for the coupling of plate **2** and the membrane. In this way the instrument has become so much simpler and safer in use than other known systems.

FREDERIK VAN DER PLAS.

PUBLISHED
MAY 25, 1943.
BY A. P. C.

F. VAN DER PLAS
COIN-WATERMETER
Filed Dec. 4, 1939

Serial No.
307,509
2 Sheets-Sheet 1

FIG. 1

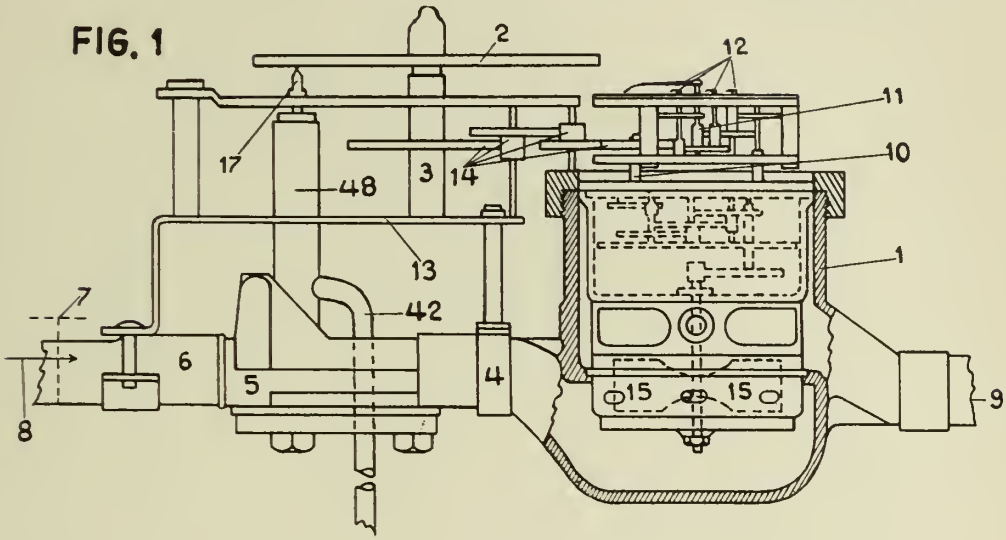

FIG. 2

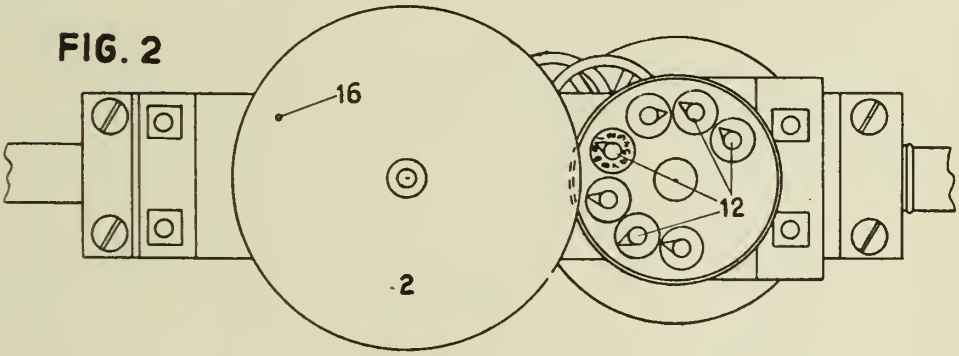

FIG. 4

FIG. 3

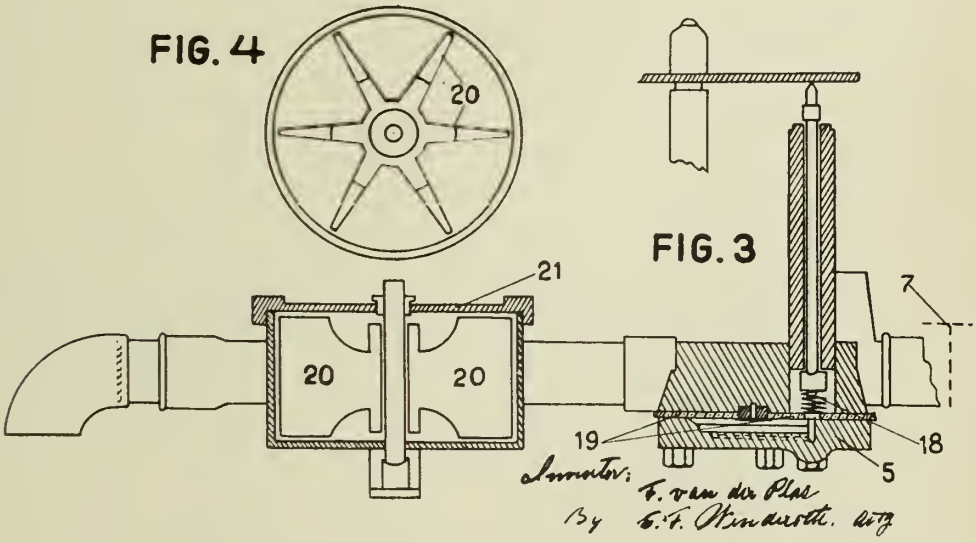

Inventor: F. van der Plas
By E. F. Wenderoth, Atty

PUBLISHED

MAY 25, 1943.

BY A. P. C.

F. VAN DER PLAS

COIN-WATERMETER

Filed Dec 4, 1939

Serial No.

307,509

2 Sheets-Sheet 2

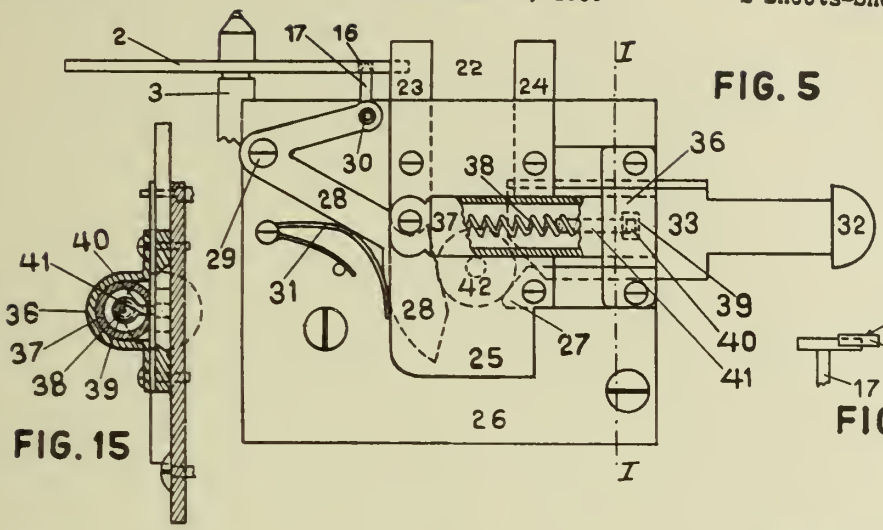

FIG. 5

FIG. 15

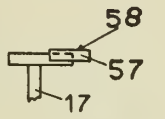

FIG. 16

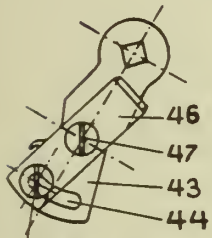

FIG. 6

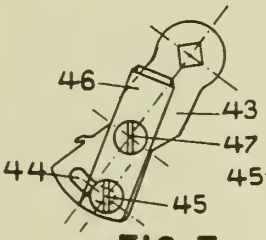

FIG. 7

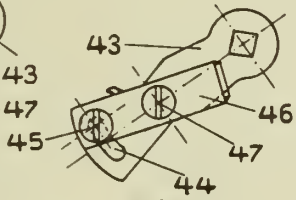

FIG. 8

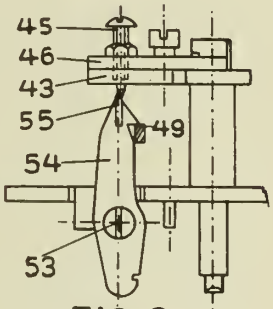

FIG. 9

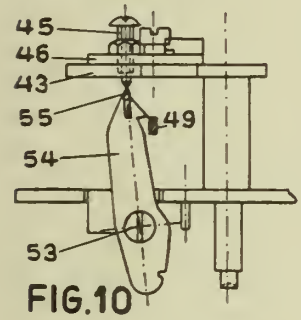

FIG. 10

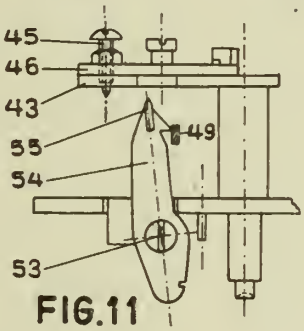

FIG. 11

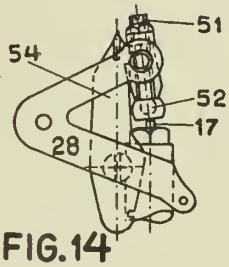

FIG. 14

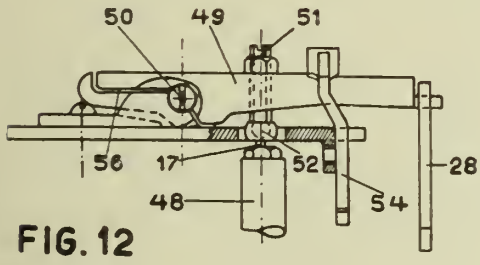

FIG. 12

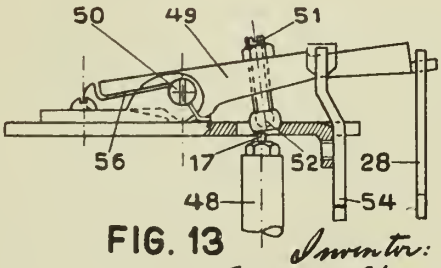

FIG. 13

Inventor:
F. van der Plas
By E. F. Wenderoth Atty

Published May 25, 1943

Serial No. 308,261

ALIEN PROPERTY CUSTODIAN

CARRIAGE CONTROL FOR ACCOUNTING MACHINES

Hermann Rauh, Berlin-Zehlendorf, Germany; vested in the Alien Property Custodian

Application filed December 8, 1939

The invention relates to a special control of the printing carriage of accounting machines, in order to automatically switch the same over from the columns for plus and minus turn overs (turn over "Debit" and turn over "Credit") into the columns for "Debit" and "Credit" for the new balance. For further explanation of the invention reference is made to the column-diagram Fig. A. On the balance-carrying forward columns for "Debit" and "Credit" follow the columns for the designation of the entrances: date, text, entrance number, then the turn over debit and credit columns, and on these follow the columns "Debit" and "Credit" of the fresh balance.

In accounting machines which calculate with such columns the problem arises, to change-over the carriage after every entrance of the plus or minus turn-over into the fresh balance debit or credit column coordinated to the corresponding line-total. In known accounting machines this is done in such a manner that at the transition of the calculation in the balancing mechanism from amounts above zero to amounts below zero stoppages occur, which prevent the entrance of a plus balance in the balance debit column or of a minus balance in the balance credit column, whereupon then, for instance by hand, the corresponding fresh adjusting of the carriage to the correct column is effected. This operation is complicated and requires time.

Accounting machines are also known which automatically select the debit or credit balance column in accordance with the content of the counting mechanism; the selection takes, however, place only when, after the entering of a turn-over item an automatic empty movement is carried out in the first portion of the debit balance column.

The invention solves the problem to attain at every printing of turn-overs in the turn-over debit or credit column, that the carriage after the printing has been completed (operation) in these columns is automatically and directly brought into the fresh balance debit or fresh balance credit column corresponding to the actual state of the transverse or balancing mechanism.

As in the accounting machines of known construction, at first a horizontal motor key and a jumping over motor key are provided. The jumping over motor key has to be depressed in order to change over the carriage from the balance carrying-forward column "Debit" to the column for the designation of the entrance. In order to change over from the balance carrying-forward column "Credit" to the booking designation column, the jumping over motor key as well as the horizontal motor key can be depressed, because the entrance designating column follows directly on the balance carrying-forward column "Credit." In order to change over from the hooking designation column to the turn-over-debit column only the horizontal motor key can be depressed, because the turn-over debit column follows directly on the booking designation column. The jumping over motor key has to be depressed, as is known, when the carriage has to be changed over from the booking designation column to the turn-over credit column. All these are known proceedings which are attained by known means.

If then in the turn-over debit column an item has to be printed, a plus or minus balance can then be produced in the transverse or balancing mechanism, according to whether the amount in the balance-carrying forward column and in the turn-over column at the addition gives plus or minus.

The invention comes herein. It has the effect:

a. That, when the balancing mechanism shows a plus-balance after a turn-over item has been booked, the carriage jumps immediately automatically from the turn-over debit column into the fresh balance "Credit" column,

b. If, however, the balance or transverse mechanism shows a minus balance, the carriage jumps automatically and directly from the turn-over credit column into the fresh balance debit column,

c. When the carriage is adjusted to the turn-over credit column and the balancing mechanism shows a plus-balance, the carriage jumps over automatically and directly after the printing of the turn-over item from the turn-over credit column to the fresh balance credit column,

d. When the carriage is adjusted to the turn-over credit column and the balancing mechanism shows a minus-balance, the carriage after the printing of the turn-over item is directly and automatically adjusted from the turn-over credit column to the fresh balance-debit column.

This is thereby attained that the gear for the jumping or jumping over of the carriage is brought into dependency on the known circulation feeding of the balancing or transverse mechanism.

To explain the invention, it is first necessary to explain the special change-over gear for the carriage, which effects that the carriage jumps

only stepwise from stop to stop of the carriage rail or can jump over any predetermined columns. This gear is illustrated in Figs. 1 to 4.

Fig. 1 shows an elevation of the gear element pre-adjusted by the horizontal motor key in the normal position of the carriage,

Fig. 2 shows the jumping position of the carriage, whereas

Fig. 3 shows the normal position,

Fig. 4 shows in jumping position the same gear in conjunction with the additional locking gear at the actuation of the jumping over motor key,

Figs. 5–7 show in top plan view this gear in different positions,

Figs. 8–12 illustrate control elements which prevent further jumping of the carriage after it has jumped over a certain number of columns, whereas

Figs. 13 and 14 illustrate the special control elements for the jumping feeding of the carriage from the turn-over column into the coordinated balance-column in spite of the actuation of the horizontal key.

I. *Step-feeding of the carriage by actuation of the horizontal motor key H*

As shown in Figs. 1 and 2, the stop bar 1 fixed on the carriage carries the stops 2. In the inoperative position the carriage is retained by a tappet 3 bearing on the stops 2. This tappet is mounted on a lever 5 oscillatable about a pin 4. The lever 5 is directly controlled, in a known manner, from the horizontal motor key H and in such a manner, that at the next following calculating operation of the machine it is lifted about pin 4 into the position shown in Fig. 2. The actuation of the lever 5 at the calculating movement of the machine can be effected for instance by a bar 6 through the intermediary of an eccentric disc 7, which first oscillates in the direction of the arrow the pawl 8 which is resiliently suspended on lever 5, without actuating the lever 5; during the return movement a projection 9 of the eccentric disc lifts pawl 8 and thereby the lever 5 as shown in Fig. 2. The carriage then jumps by one step up to the next stop 2'. In the meantime the lever 5 has dropped back from the position shown in Fig. 2 into its inoperative position Fig. 1 owing to the rotation of the eccentric disc 7.

II. *Carriage feeding by several steps by actuation of the jumping over motor key U*

If the jumping over motor key U is depressed, the carriage has not to be stopped by its next stop after one step but must be able to jump on. As shown in Figs. 3 and 4 (compare also top plan views in Figs. 5 to 7), a special lever 11 oscillatable about a pin 10 is provided for this purpose above the lever 5. This lever 11 is oscillated at the depressing of the jumping over motor key into the position shown in Fig. 4 for instance by a bar 12. In the normal position an abutting face 13 of this lever is in front of the lever 15 oscillating about an axle 14 and locks this lever. In the oscillated position of the lever 11 shown in Fig. 4 the lever 15 is no longer locked but can freely oscillate about an axle 14. (Compare also Fig. 5, in which the gear consisting of levers 11 and 15 is shown in inoperative position, and Figs. 6 and 7 showing this gear in disengaged position). A lever 16 is mounted on the axle 14 of the lever 15. This lever 16 co-operates with a cam 17 fixed on the lever 5. If the lever 15 is liberated at the oscillation of lever 11 it oscillates until the lever 16 first bears on to the end face of cam 17. In this position the lever 5 is still in its inoperative position. If then the lever 5 is lifted by the gear 7—9, the lever system 15, 16 oscillates further under the action of a spring 18 (Figs. 5–7) until lever 16 comes to bear upon the face of lever 5 in front of the cylindrical face of cam 17 (Fig. 7). The lever 5 is thus held securely in its oscillated position (Fig. 2 or Fig. 4), so that the carriage can then jump on without hindrance until other control operations prevent it from jumping after a certain number of columns.

These control elements are shown in Figs. 8, 10 and 5.

On the control bar 1 a special cam 40 is mounted which, when sliding along nose 41 of a lever 42 pushes this lever towards the rear. Its rear side presses at the same time against a lever 43 loosely mounted on an axle 32 and turns this lever in the right hand direction (Fig. 8). A lever 36 fixed on the upper end of the axle 32 (Fig. 10) presses, during its oscillation, against the lever 16 and oscillates the levers 16 and 15 to the left (Fig. 10). At this oscillation cam 17 and lever 5 are again liberated, so that the tappet 3 comes again into the path of stop 2 and the carriage is therefore stopped at the next following stop. (Figs. 10 and 5.)

III. *The carriage feeding from a turn-over column to a new balance-column*

a. At preceding starting of the machine in turn-over-column by the pumping over motor key:

According to the invention the carriage has to be controlled so that it moves in dependency on the plus- or minus circular feeding of the balancing mechanism automatically and without special manipulation from a turn-over column directly into a fresh balance-column for debit or credit amounts. The driving mechanism serving herefor is illustrated in different views in Figs. 9–12.

If a circular feeding of the balancing mechanism occurs, a lever 21 mounted on axle 20 (circular feeding axle) is oscillated by rod 19 (Fig. 10), said lever 21 driving a bar 25 by means of a bar 22 through the intermediary of a bell crank lever 24 oscillatable about pin 23. This bar 25 is lowered when the circular feeding is negative. An axle 27 is lowered or lifted from bar 25 through the intermediary of an oscillatable lever 26 and thereby an arm 28 fixed on this axle is moved either into the position shown in full lines, for minus-balance, or into the position shown in dotted lines for plus-balance (Figs. 9 and 10). A projection 29 of the arm 28 is thereby brought either into the path of a roller 30 or of a roller 31 (Figs. 11 and 12, also 10 and A). The rollers 30 and 31 are mounted on the rail 1 for the carriage control (Fig. 10). If the arm 28 is in the path of the roller 30 or 31, it is oscillated, when the control bar 1 is shifted in the direction of the arrow in Fig. 11, into the position shown in Fig. 1. At this occasion it turns the axle 32 by means of the arm 33 fixed on this axle, and the pin 34 of this arm engages in the mouth 35. From the axle 32 (Fig. 10) an arm 36 is also oscillated (compare Fig. 10 and also Fig. 5). By the oscillation of arm 36 the angle crank lever 16 and 15 is lifted (Fig. 5). The locking of the lever 5 is thus unlocked, so that lever 5 drops back into the po-

sition shown in Fig. 1 and 3 and consequently the carriage is caught again when the next following stop strikes against the tappet **3**. This is the same proceeding as that described under II last paragraph.

b. The carriage feeding from the turn-over column into the fresh balance-column at preceding starting of the machine by the horizontal motor key.

In the preceding paragraph it has been explained, how the locking of the lever **5** carrying the tappet **3** in the inoperative position, which had taken place at actuation of the jumping motor key, is unlocked indirectly from the circular feeding of the balancing mechanism so that the carriage is intercepted from a turn-over column after the actual plus- or minus-circular feeding of the balancing mechanism in the co-ordinated balance column.

This supposes that the turn-overs, for accurate automatic selection of the balance-column, ought to be booked by means of the jumping-over key. If, however, erroneously the horizontal key had been depressed in the turn-over columns, the carriage would jump only one step as described in the section I, that is the selection of a balance column could not be carried out in dependency on the positive or negative circular feeding. To avoid this defect, a separate control shaft **44** is provided on the control bar **1** for each of the turn-over columns (Figs. 13, 14 and A) which control shaft causes the same effect as the jumping-over key, namely pulls back the lever **11**, **13** in order that lever **5** after the feeding has taken place can be securely held in the inoperative position.

The control elements which are necessary herefore are partly situated in front of those of Fig. 10 and are shown in Figs. 13 and 14.

An arm **33** oscillatable about an axle **37** is oscillated in the right hand direction by means of roller **44**, ratchet **45**, lever **46** and axle **37** when the carriage moves over to the turn-over column. This arm lifts, at this oscillating movement, the lever **11**, by means of a pin **39** fixed on this lever against which pin the arm bears, whereby the locking of the lever **5** in its inoperative position (tappet **3** out of engagement with the path of the stops **2**) is caused; this locking being then unlocked again as described in the preceding paragraph indirectly by the circular feeding of the balance-mechanism by means of roller **30**, **31**, lever **28**, pin **34**, axle **32** and lever **36**, so that the lever **5** and the tappet **3** drop back into their effective position and stop the carriage in the fresh co-ordinated debit- or credit-column. The same proceeding as if the jumping over motor key had been depressed is therefore obtained.

The lifting and lowering of the bar **25** or the oscillation of the circular feeding shaft **20** in dependency on the circular feeding can be effected directly from this circular feeding, or better indirectly in that by the circular feeding a pretensioned spring mechanism F is disengaged (Fig. 10), which in turn at the releasing carries out the circular feeding and the operations depending on the same.

HERMANN RAUH.

PUBLISHED H. RAUH Serial No.

MAY 25, 1943. CARRIAGE CONTROL FOR ACCOUNTING MACHINES 308,261

BY A. P. C. Filed Dec. 8, 1939 5 Sheets-Sheet 1

Fig.1

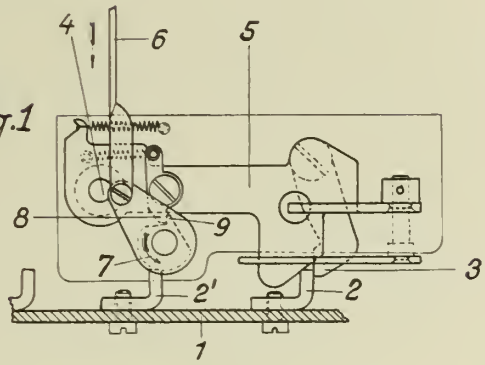

Fig.2

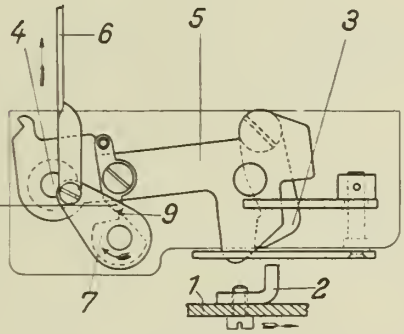

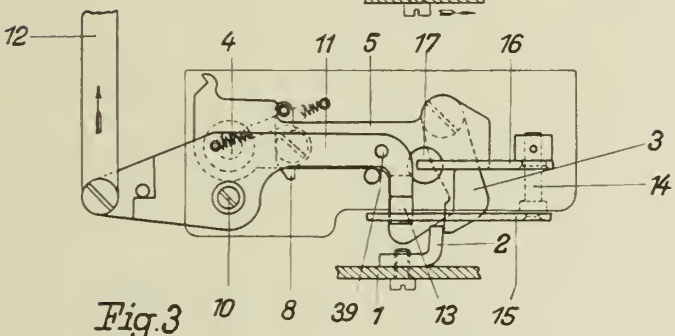

Fig.3

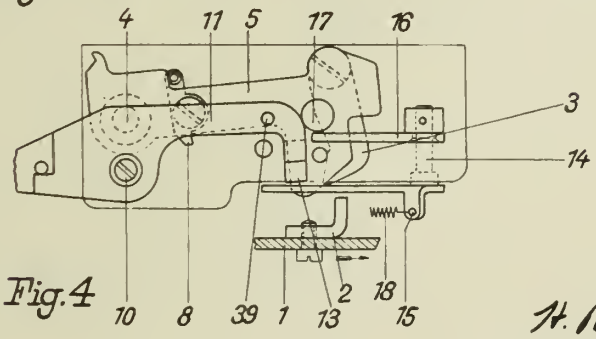

Fig.4

Inventor:
H. Rauh
By E. F. Wenderoth
Atty

PUBLISHED
MAY 25, 1943.
BY A. P. C.

H. RAUH
CARRIAGE CONTROL FOR ACCOUNTING MACHINES
Filed Dec. 8, 1939

Serial No.
308,261
5 Sheets-Sheet 2

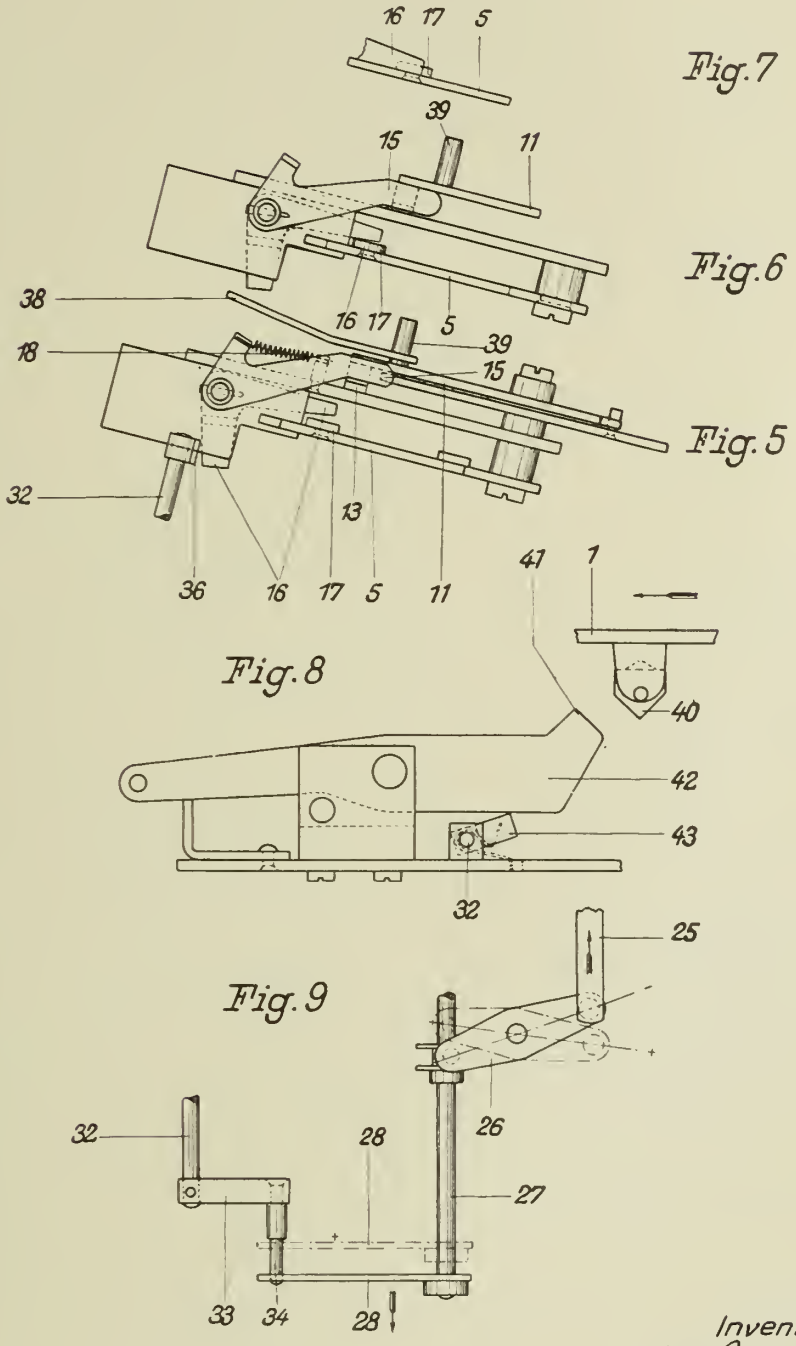

Inventor:
H. Rauh
By E. F. Wenderoth
Atty

PUBLISHED

MAY 25, 1943.

BY A. P. C.

H. RAUH

CARRIAGE CONTROL FOR ACCOUNTING MACHINES

Filed Dec. 8, 1939

Serial No. 308,261

5 Sheets-Sheet 3

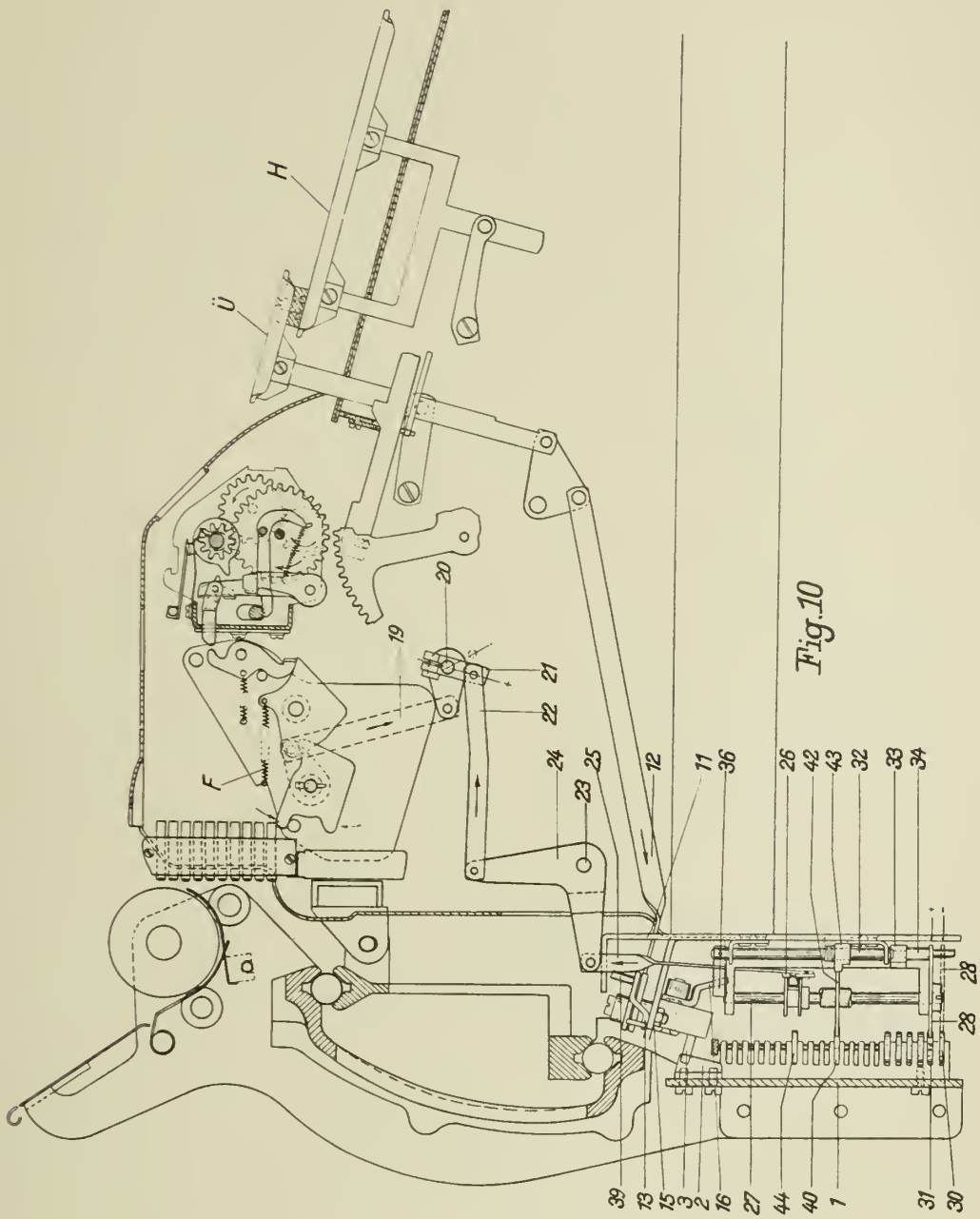

Fig. 10

Inventor:
H. Rauh
By E. F. Wenderoth
Atty

PUBLISHED H. RAUH Serial No.

MAY 25, 1943. CARRIAGE CONTROL FOR ACCOUNTING MACHINES 308,261

BY A. P. C. Filed Dec. 8, 1939 5 Sheets-Sheet 4

Fig.11

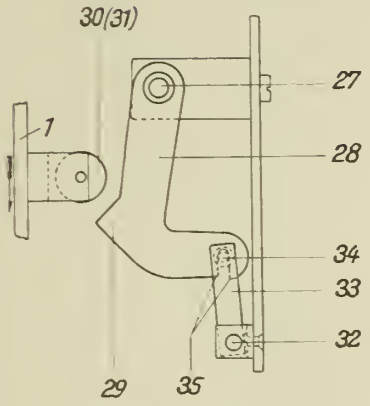

Fig.12

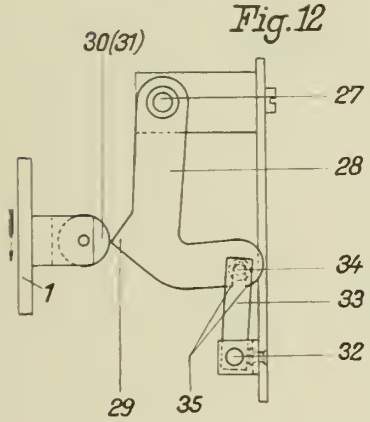

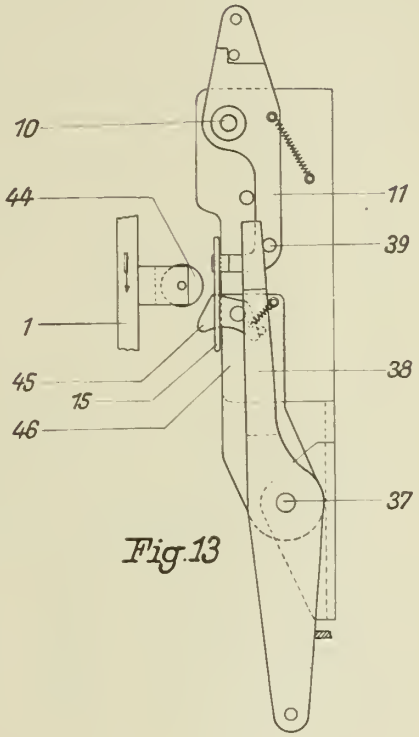

Fig.13

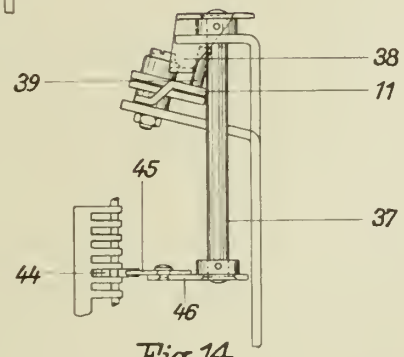

Fig.14

Inventor:
H. Rauh
By E. F. Wenderoth
Atty

PUBLISHED MAY 25, 1943. BY A. P. C.

H. RAUH

CARRIAGE CONTROL FOR ACCOUNTING MACHINES

Filed Dec. 8, 1939

Serial No. 308,261

5 Sheets-Sheet 5

Saldo-Vortrag		Datum	Text	Buchung	Umsätze		Neuer Saldo	
Soll	Haben	Tag Mon		Nr	Soll	Haben	Soll	Haben
	800.00				900,00		100.00 = Cr	
100.00						700.00		600,00 =
	600.00				400.00			200,00 =
100.00 =	1400.00 =				1300.00 =	700.00 ∓	100,00 ∓	800.00 ∓
						700.00 ∓		700.00 ∓

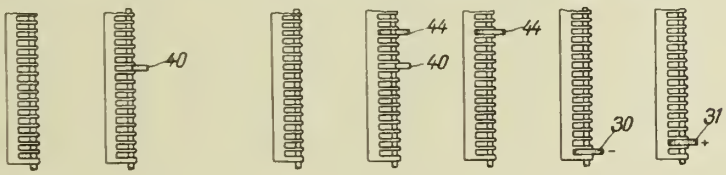

Fig. A

Inventor:
H. Rauh
By G. F. Vanderoth
Atty

Published May 25, 1943

Serial No. 308,260

ALIEN PROPERTY CUSTODIAN

ACCOUNTING MACHINE WITH A TRANSVERSE BALANCING MECHANISM FOR POSITIVE AND NEGATIVE SUMS AND ACCUMULATING MECHANISMS, OF WHICH EVERY TWO DIFFERENT ONES, I. E. ONE FOR POSITIVE AND ONE FOR NEGATIVE LINE TOTALS, ARE COORDINATED TO A PREDETERMINED COLUMN

Hermann Rauh, Berlin-Zehlendorf, Germany; vested in the Alien Property Custodian

Application filed December 8, 1939

The machine according to the invention belongs to the class of accounting machines with a transverse or balancing mechanism for positive and negative totals and with accumulating counting mechanisms, the stepwise adjustment of which takes place when the carriage jumps from one column to another column.

It has already been proposed, to coordinate to the individual columns two accumulating mechanisms for plus- and minus amounts, especially to the balance column two accumulating mechanisms for plus- and minus line totals. In this known construction the accumulating mechanism for plus- or the accumulating mechanism for minus line totals is actuated in dependency on the subtraction control of the balancing mechanism (feeding by minus balance lever). This requires especial attention at the attendance or the arrangement of a separate control of the balancing mechanism in such a manner that in dependency on the known circular feeding, i. e. at backward carrying over of a tens feeding moving through the highest place of this balancing mechanism upon the unit place, the total key is locked, so that the subtraction feeding element (minus balance lever) has first to be actuated in order to feed minus-total.

According to the present invention a new way is proposed for the selection of the two accumulating mechanisms for positive and negative line-totals, which mechanisms are coordinated to the line-totals, and this way makes this selection absolutely independent on the manipulation and thereby on the attention of the person who attends to the accounting machine and carries the same out positively in a correct manner.

This is attained according to the invention in that the engaging of the two accumulating mechanisms for positive and negative line-totals takes place exclusively in dependency on the well known circular feeding of the balancing or transverse mechanism. In the accounting machine according to the invention there are consequently provided:

a. A selecting device for the accumulating mechanisms so that to every column an accumulating mechanism is coordinated; to the line-total column (balance column), however, two accumulating mechanisms are coordinated, one for the positive and one for the negative balances,

b. The subtraction control for the balancing mechanism adapted to be adjusted by the paper carriage or by hand,

c. An additional negative feeding for the totalising in the balancing mechanism, this feeding being automatically adjusted by the movement of the balancing mechanism (circular feeding),

d. A separate control for the change of the accumulating mechanisms in the balance column, which is also automatically controlled by the operation of the balancing mechanism, i. e. the circular feeding, and in such a manner that, each time the negative circular feeding has been passed through, the second single counting mechanism coordinated to the balance column is automatically selected.

In order to carry out automatically these different proceedings in dependency on the circular feeding, the circular feeding gear is not, as usual, constructed so that the tens feeding is effected directly from the highest place of the balancing mechanism to the unit place, but in a special manner so that from the tens feeding in the highest place the feeding in the unit place is merely prepared, and by releasing of a pawl, which in turn liberates a separate spring tensioning mechanism. This spring tensioning mechanism then carries out during the calculating operation the tens-feeding in the lowest place, the reversing of the transverse- or balancing-mechanism into the subtractive position and the change of the accumulating mechanisms in the balance column. Hereby is avoided that the circular feeding is made more difficult, and a sufficient power for the rapid reversing of the balancing mechanism and for the change of the accumulating mechanisms is produced.

In the accompanying drawings embodiments of the invention are illustrated by way of example.

Figs. 1 to 7 show the special means of the circular feeding,

Figs. 8 to 10 show the reversing device for the balancing mechanism and for the changing of the accumulating mechanisms.

I. *The special kind of the circular feeding*

Fig. 1 shows in elevation the fundamental position of the counting mechanism and of the elements carrying out the circular feeding,

Fig. 2 an elevation of the gear after the passage of a tens feeding through the highest place of the transverse mechanism and prior to the swinging out of the counting mechanism from the feeding mechanism segments,

Fig. 3 a top plan view of Fig. 1,

Fig. 4 an elevation of the position of the circular feeding gear at negative circular feeding,

Fig. 5 an elevation of the same gear at positive circular feeding,

Fig. 6 a locking arrangement for the circular feeding gear in the actual circular feeding position,

Fig. 7 the arrangement for returning the gear.

In Fig. 1 the toothed wheels of the counting mechanism are designated by 1 and driven at addition by a wheel 2, at subtraction by wheels 3 and 4. The counting mechanism is mounted in the counting mechanism frame 5 and during the calculating operation it is brought into engagement with the segments 6 of the adjusting mechanisms by being shifted in downward direction. On every toothed wheel 1 of the counting mechanisms a tens feed disc 7 with a tens feed projection 8 and with a total stop 9 is mounted. It is supposed that the counting mechanism be driven subtractively and that a tens feeding in the highest place be proceeding. The tens feed projection 8 is then turned in the direction of the arrow A from the zero position and strikes in known manner against a projection 11 of a star stop oscillatably mounted on a stationary pin 10, the arms 12, 13 of this star stop bearing against bent off ends 14 and 15 of an oscillatable tens-feed lever 17 oscillatable about pins 16 and corresponding to the highest place. The tens feed lever 17 is therefore oscillated towards the left (compare for instance the position Fig. 2) when the projection 8 passes along the stop 11 of the stop star. The tens feed lever 17 of the highest place of the counting mechanism carries a slide 18 hingedly connected with it. As the counting mechanism, during the calculating operation, had been lowered from the position shown in Fig. 1 into the position in which it engages with the segments 6 of the adjusting mechanism, the slide 18, during the oscillation of the lever 17 towards the left, engages into a notch 19 of a pawl 22 controlled by a spring 21 and oscillatable about a pin 20. The tens feed lever 17 is further rigidly connected with a notch lever 23 which, during the oscillation, engages with its angle 24 over the abutment edge 25 of a lever 27 oscillatably mounted on pin 26. so that this lever 27 under the action of its spring 28 brings its edge 25 to in front of the abutment 24 of lever 23 and securely holds this lever together with the tens feed lever 17 in the position oscillated towards the left (Fig. 2).

If then the counting mechanism, after completion of the calculating operation, is again oscillated away from the segments 6, the inclined face 29 of slide 18, which face bears against an inclined face 30 of pawl 22, pushes this pawl to the left. The pawl 22, which otherwise bears with its bent over end 31 against a notch 32 of a lever 34 oscillatable about an axle 33, now liberates this lever 34. This lever is oscillated from the position shown in Fig. 1 into the position shown in Fig. 4 by the action of a preliminarily tensioned spring 35. A projection 36 of the lever 34 presses against the abutment face 37 of a lever 39 oscillatable about an axle 38, so that this lever moves from the position shown in Fig. 1 into that shown in Fig. 4, the oscillating movement of the lever being limited by a jaw 40 and by a bolt 41 on the path of this jaw (Figs. 1 and 4).

A lever 42 is rigidly connected with the lever 39 and from a pin 43 of this lever 42 the movement is transmitted by a rod upon the feed shaft which effects

1. The tens feeding in the balancing mechanism from the highest place to the lowest place and

2. The reversing of the accumulating mechanisms in the totals column from the positive to the negative accumulating mechanism or inversely.

In order that the gear remains in the position illustrated in Fig. 4 corresponding to a negative circular feeding, another lever 44 with roof-shaped end 45 is provided which, in the position shown in Fig. 6 and corresponding to the negative circular feeding, bears with its roof face 45′ against a bolt 46 of a pawl 49 oscillatable about a pin 47 and held by a spring 48 in the locking position.

In order that, when the balancing mechanism carries out inversely a circulating feeding into the positive position, a corresponding reversing takes place, a second gear 22*a*, 34*a* is provided besides the gear 22 and 34, the pawl 22*a* being displaced relative to the pawl 22 by as much as the axial feeding movement of the balancing mechanism from additive to subtractive feeding amounts to, with the result that in the additive position of the counting mechanism the slide 18 cooperates with the pawl 22*a* and thereby actuates, when the counting mechanism is oscillated out of engagement with the segments, the lever 34*a*, and through the same the lever 39 is actuated (Fig. 3).

This actuation of the lever 39 from the lever 34*a* at positive circular feeding is illustrated in Fig. 5. In this Fig. 5 the lever 34*a* is shown in the oscillated position, the oscillating being effected after liberation by spring 35*a*. A bar 51 engages on a pin 50 of lever 34*a* and a pin 53 of lever 39 engages in a slot 52 of said bar. In the initial position (Fig. 1) the pin 53 is at the right hand end of slot 52. If the circular feeding is negative, the pin 53 moves to the left end of slot 52. If then a positive circular feeding takes place, the left end of slot 52 moves the pin 53 towards the right, so that the lever 39 oscillates from the position shown in Fig. 4 into the position shown in Fig. 5. Hereafter a locking of the gear takes place again, the lever 44 bearing with its roof-shaped end 45″ from the other side against the pin 46 of pawl 49 (Fig. 6).

For returning this gear at the beginning of the next following operation of the accounting machine a bar 54 serves which is driven from the machine shaft and returns through the intermediary of lever 55 or 55*a* the feed pawl 34 or 34*a* into the initial position, in which they are kept locked by the bent off ends 31 of pawls 22 and 22*a* (Fig. 7).

Herefrom can be seen, that the pawls 22 and 22*a* have to be oscillated, without special feed work, merely by the tens feed lever of the highest place, and that then the other feeding proceedings are produced by the tension forces of the springs 35 or 35*a*.

II. *The carrying out of the tens feeding from the highest balancing work place upon the unit place (circular feeding)*

As can be seen from Figs. 1 and 8, an arm 58 fixed on an axle 57 is oscillated by the lever 42 through the intermediary of a rod 56, and thereby an axle 57 is rotated. This axle extends through the machine from the highest to the lowest calculating place and effects, by an element arranged on its opposite end, the tens feeding of the unit place.

III. *The change of the accumulating mechanism in the balance column*

In Fig. 8, the gear for this change is in its initial position,

Fig. 9 shows the gear in the position at negative circular feeding and after actuation of the total key, whereas

Fig. 10 shows the same position during the operation of the main shaft.

A crank **59** is mounted on the axle **57** and when oscillating shifts a bar **60** in the direction of the arrow in Fig. 8. The open jaw **61** of bar **60** then engages over a stationary pin **62**. An abutment face **63** of bar **60** in its initial position bears against a pin **64** of a pawl **65** which is hingedly connected to an arm **66** of a bell crank lever **68**, **68***a* oscillatable about a pin **67**. The pawl **65** which, under the action of a spring **69**, tends to oscillate about a pin **70** is locked as the pin **64** bears against the abutment face **63**. This pawl is further locked by a second pin **71** which bears against the back of an arm **73** oscillating about an axle **72**. If the jaw-bar **60** is shifted towards the right, its abutment face **63** liberates the pin **64**, so that pawl **65** could oscillate. At each circular feeding this liberating of pawl **65** takes place. However, the pawl is still locked by the pin **71** which bears against the arm **73**. If then a bar **74** is shifted by the total key T or by the subtotal key S*t*, it actuates through a bar **75** a lever **77** oscillatable about a pin **76**, which lever **77** oscillates by means of a rod **78** a crank **79** on the shaft **72** and thereby oscillates the lever **73** to the right in the direction of the arrow. At this moment, after the circular feeding has been completed and the total or subtotal key actuated, the pawl **65** is liberated and oscillates towards the right under the action of spring **69**, so that its abutment face **80** engages over an angle **81** of a connecting rod **83** oscillatable about pin **82**. The pawl **65** is then coupled with the connecting rod **83**. This rod or its roller **85** is lifted, during the calculating operation, by a curved disc **84** and thereby lifts the pawl **65** and with it the arm **66** of the bell crank lever **68**. **68***a*.

The arm **66** of the bell crank lever **68**, **68***a* shifts the bar **88** towards the right and lifts through lever **89** and **89***a* a bar **90**, by which the change element **91** is actuated for the changing over from the accumulating mechanism for the positive amounts to the accumulating mechanism for the negative amounts.

IV. *The reversing of the balancing mechanism from addition to subtraction in dependency on the circular feeding*

The reversing of the balancing mechanism from addition to subtraction or inversely is effected by the same angle lever **68**, **68***a* (Fig. 8) in dependency on the circular feeding. At the oscillation of angle lever **68**, **68***a* (compare Section III) the wedge face **86** of arm **68***a* of the angle lever **68** drives the reversing lever **87** of the counting mechanism and shifts thereby the counting mechanism Z from the positive into the negative feed position (compare also Figs. 8*a* and 10).

HERMANN RAUH.

PUBLISHED

MAY 25, 1943.

BY A. P. C.

H. RAUH

ACCOUNTING MACHINE WITH A TRANSVERSE BALANCING MECHANISM FOR POSITIVE AND NEGATIVE SUMS AND ACCUMULATING MECHANISMS, OF WHICH EVERY TWO DIFFERENT ONES, I. E., ONE FOR POSITIVE AND ONE FOR NEGATIVE LINE TOTALS, ARE COORDINATED TO A PREDETERMINED COLUMN

Filed Dec. 8, 1939

Serial No. 308,260

4 Sheets-Sheet 1

Fig. 1

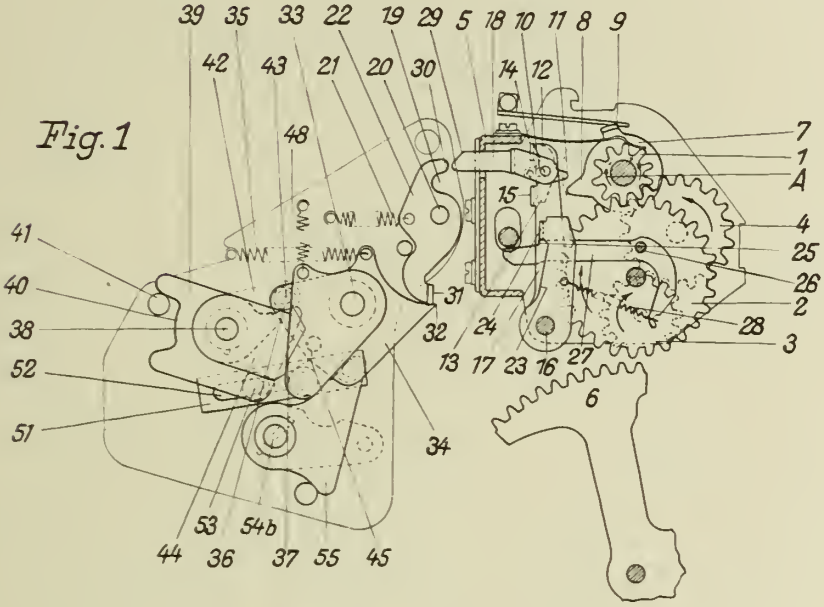

Fig. 3

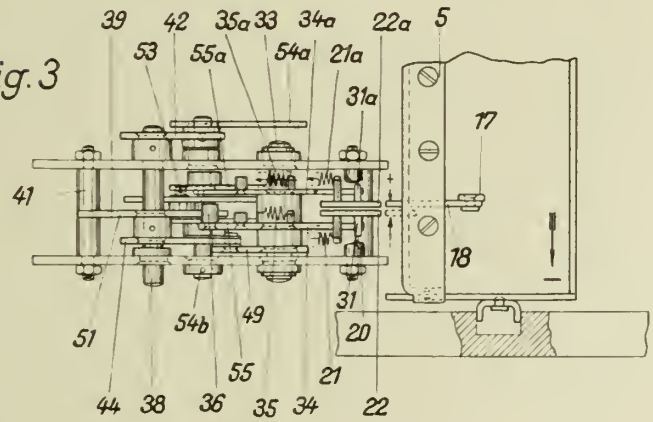

Inventor:
H. Rauh
By E. F. Wenderoth
Atty

PUBLISHED

MAY 25, 1943.

BY A. P. C.

H. RAUH

ACCOUNTING MACHINE WITH A TRANSVERSE BALANCING MECHANISM FOR POSITIVE AND NEGATIVE SUMS AND ACCUMULATING MECHANISMS, OF WHICH EVERY TWO DIFFERENT ONES, I. E., ONE FOR POSITIVE AND ONE FOR NEGATIVE LINE TOTALS, ARE COORDINATED TO A PREDETERMINED COLUMN

Filed Dec. 8, 1939

Serial No. 308,260

4 Sheets-Sheet 2

Fig. 2

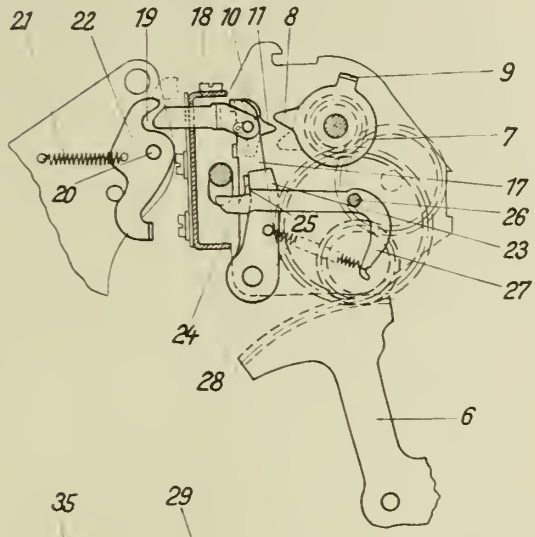

Fig. 4

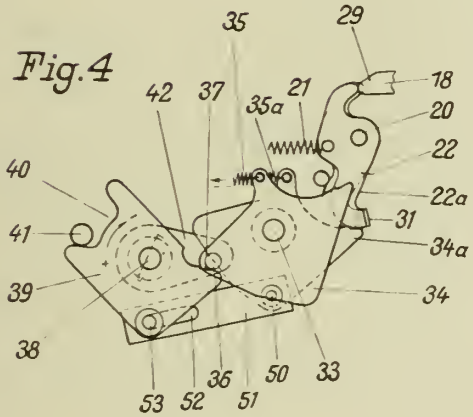

Fig. 6

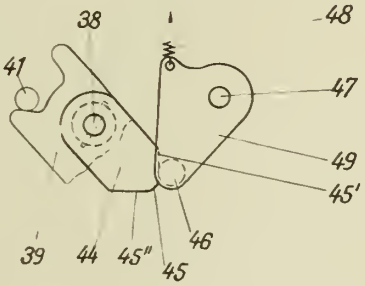

Fig. 5

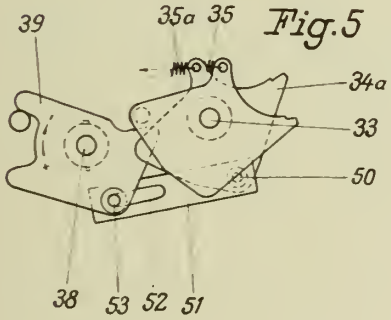

Fig. 7

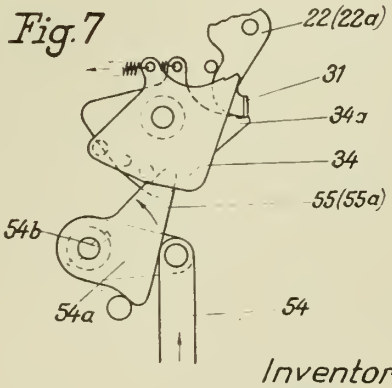

Inventor:
H. Rauh
By E. F. Wenderoth
Atty

PUBLISHED

MAY 25, 1943.

BY A. P. C.

H. RAUH

ACCOUNTING MACHINE WITH A TRANSVERSE BALANCING MECHANISM FOR POSITIVE AND NEGATIVE SUMS AND ACCUMULATING MECHANISMS, OF WHICH EVERY TWO DIFFERENT ONES, I. E., ONE FOR POSITIVE AND ONE FOR NEGATIVE LINE TOTALS, ARE COORDINATED TO A PREDETERMINED COLUMN

Filed Dec. 8, 1939

Serial No. 308,260

4 Sheets-Sheet 3

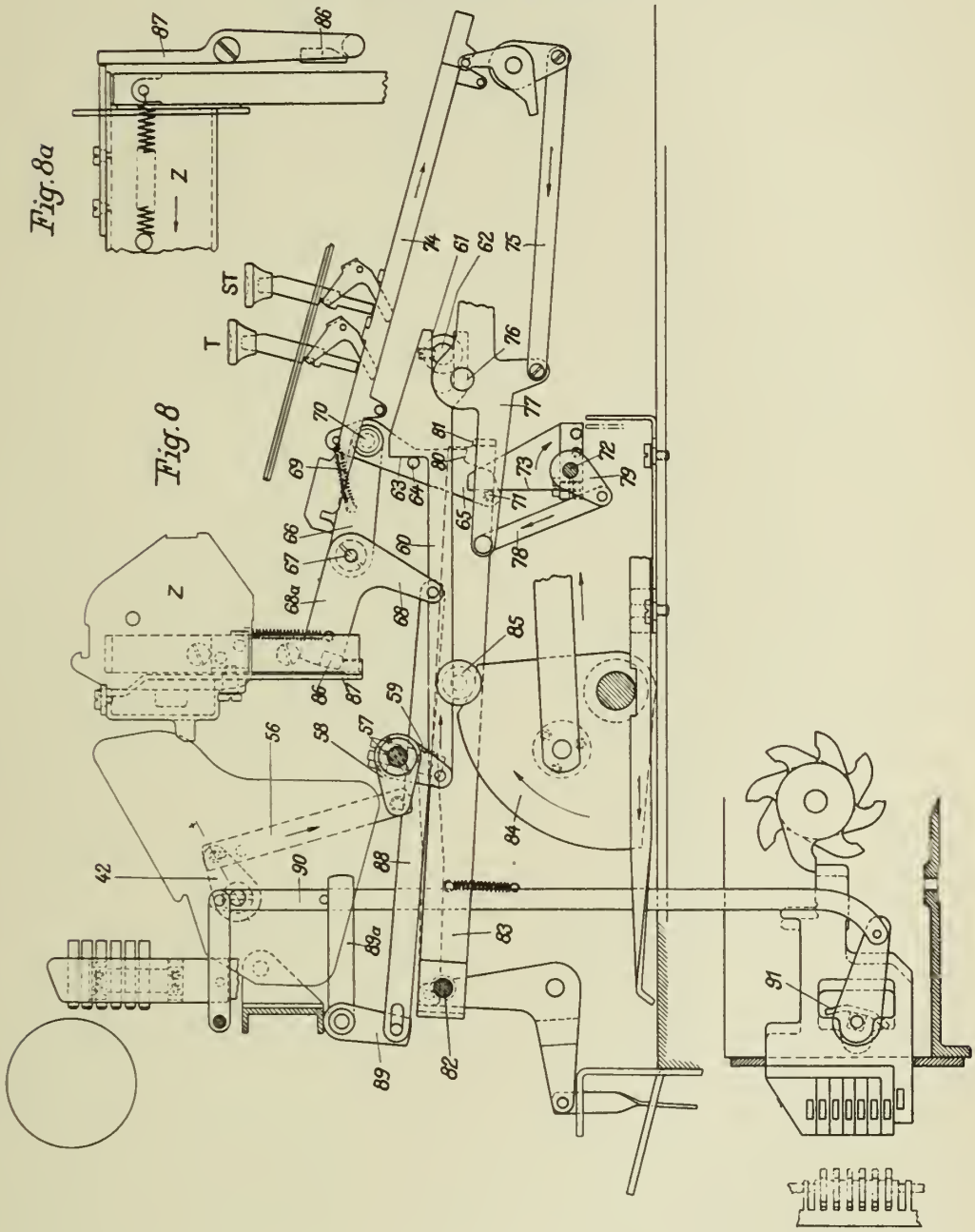

Inventor:
H. Rauh
By E. F. Wenderoth
Atty

PUBLISHED

MAY 25, 1943.

BY A. P. C.

H. RAUH

ACCOUNTING MACHINE WITH A TRANSVERSE BALANCING MECHANISM FOR POSITIVE AND NEGATIVE SUMS AND ACCUMULATING MECHANISMS, OF WHICH EVERY TWO DIFFERENT ONES, I. E., ONE FOR POSITIVE AND ONE FOR NEGATIVE LINE TOTALS, ARE COORDINATED TO A PREDETERMINED COLUMN

Filed Dec. 8, 1939

Serial No. 308,260

4 Sheets-Sheet 4

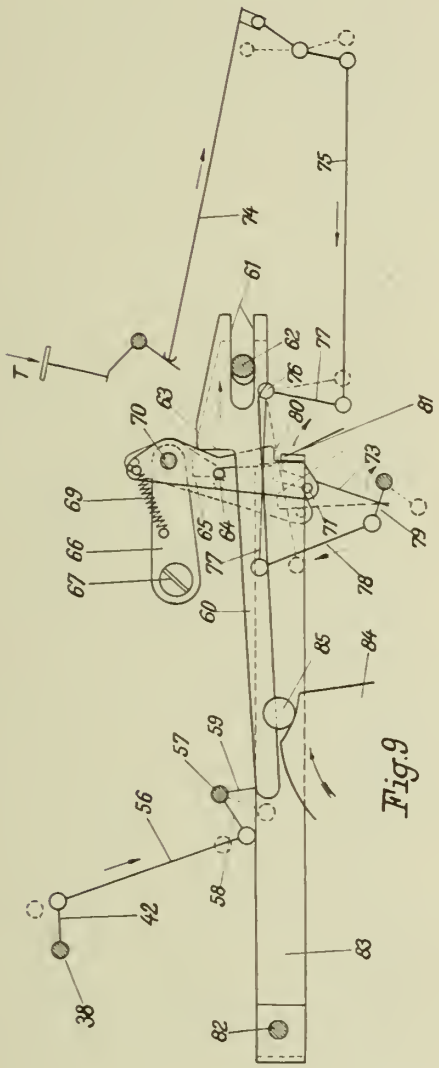

Fig.9

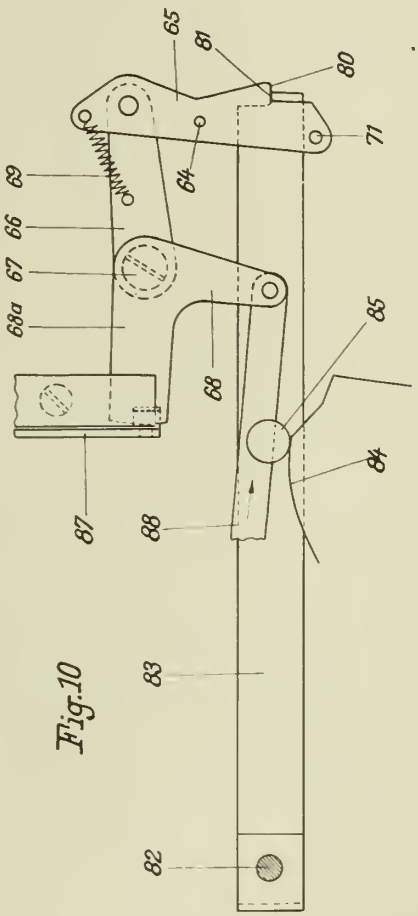

Fig.10

Inventor:
H. Rauh
By E. F. Wenderoth
Atty

Published May 25, 1943

Serial No. 308,262

ALIEN PROPERTY CUSTODIAN

MOTOR KEY FEEDING FOR ACCOUNTING MACHINES

Hermann Rauh, Berlin-Zehlendorf, Germany; vested in the Alien Property Custodian

Application filed December 8, 1939

In known accounting machines, especially bookkeeping machines, the motor keys are kept locked during the period of an operation in order to avoid disturbances in the machine, so that the motor keys can be connected again only after the expiration of this period. The locking of the motor keys occurs therefore in these known accounting machines

(a) During the feeding period of the calculating shaft,

(b) During the feeding period of the carriage movement,

(c) During the feeding period of the movement of the accumulating mechanism drum,

(d) During the period of the movement of the function keys.

This renders difficult the manipulation of the accounting machine because the calculator must wait each time until the corresponding operation is completed before he actuates a motor key; when a motor key should be depressed prematurely the calculator feels the resistance of the locking so that he becomes unsecure and is disturbed in the actuation of the machine.

The invention has for its object to make it possible that the motor keys, for instance horizontal key, jumping key and vertical key, feed already during the course of the operations of the machine or preliminarily adjust already the next following operating cycle without disturbances occurring in the machine, that is in such a manner that the corresponding operation, for instance the rotation of the calculating shaft, the feeding movement of the carriage or of the accumulating mechanisms or the feeding movement of the function keys, takes place without any serious disturbance, whereupon without renewed depression of the motor keys the fresh operation follows the completed one. In this manner it is possible to operate the machine without hindrance by lockings. The working speed can be increased in spite of the number of rotations of the machine remaining the same.

The solution of this problem is effected in that the locking mechanism, adapted to be disengaged by the motor keys, at the releasing of which the motor transmits the drive, is in turn kept locked by separate locking mechanisms during the different operations until these operations are terminated.

An embodiment of the invention is illustrated by way of example in the accompanying drawings, in which

Figs. 1, 2 and 3 illustrate the additional locking of the locking mechanisms adapted to be released by the motor keys in dependency on the rotation of the calculating shaft,

Fig. 4 shows the additional locking of the locking mechanism adapted to be released by the motor keys in dependency on the carriage movement,

Figs. 5 and 6 show the additional locking of the mechanism adapted to be released by the motor keys in dependency on the accumulating mechanism drum, whereas

Figs. 7 and 8 show the additional locking mechanism for the locking mechanism adapted to be released by the motor keys in dependency on a function key.

I. The additional locking of the locking mechanism of the motor keys in dependency on the rotation of the calculating shaft.

In Fig. 1 the locking mechanism is shown in elevation which is adapted to be brought by the motor keys into the preparatory position and also the additional locking mechanism which prevents the releasing of the main locking mechanism as long as the calculating shaft revolves.

Figs. 2 and 3 show the gear in similar views but in different intermediate positions.

The horizontal motor key is designated by **1**, the vertical motor key by **2** and the jumping over motor key by **3**. When any of these keys is actuated from the inoperative position of the machine, a rod **4** is moved downward and oscillates a lever **6** mounted on an axle **5**. At the same time a lever **7** pivotally mounted on the same axle **5** is oscillated which lifts, through the intermediary of a link **8** and of a multiarmed lever **10** oscillatable about a pivot pin **9**, a link **11** which in turn lifts out of a notch **15**, by means of the abutment **12**, an oscillatable bar **14** pivotable about a pin **13**. This bar **14** can then move to the left under the action of a spring **16** and draw along a bell crank lever **18** pivotally mounted on a pivot pin **17** so that a pawl **19** is oscillated by the action of a spring **20** about its pivot pin **21** and liberates a pawl **24** mounted by means of a spring on a crank **26** and pivotable about a pivot pin **23** so that this pawl **24** can engage into a ratchet wheel **25**, thereby completing the coupling between the driving wheel **22** and the driving crank **26**. If then, after the coupling the driving crank **26** has moved by 360°, a crank **28** of a calculating shaft **29** is oscillated forward by 90° through the intermediary of a connecting rod **27** and then again oscillated backward by 90°. At the beginning of this oscillating movement a pin **30** on the crank **28**, or on a separate crank coupled with this crank **28**, engages under the end face of a yieldable pawl **31** which is spring controlled and mounted on a pin **32** of a lever **34** adapted to oscillate about a pin **33**. The pawl **31**, during the first oscillation by 45° of crank **28**, is first positively lifted (position Fig. 3), so that also the depressed motor key is positively returned to its inoperative

position through the intermediary of an extension 35 of the lever 34 against which extension bears a bin 36 of the rod 4. After the crank 28 has terminated this movement through about 45°, the pin 30 moves away from the end face of pawl 31 and thereby releases the lever 34, so that this lever drops into its initial position. During this proceeding the releasing bar 14 has been shifted towards the right into its notched position by the connecting rod 27 through the intermediary of the roller 14*a* (Fig. 3). It is then possible to again depress the motor key until pin 36 encounters again the abutment 35. At this depressing of the key the bar 14 is again lifted out of notch 15 through the intermediary of the gear 4, 5, 7, 8, 10 and 11 and remains in this lifted out position. It can, however, not yet move sufficiently far towards the left for disengaging the bell crank lever 18 owing to a locking mechanism which prevents this movement. This separate locking mechanism consists of a lever 37 oscillatable about the axle 5 and which, under the action of a pull spring 38, pushes downward a rod 39. As long as the lever 37 is under the action of spring 38, the rod 39 is in the lowered position, so that its lower end is opposite a bent over portion of bar 14. This bar 14 can therefore not shift to the left as long as the rod 39 remains in the lowered position. This takes place during the feeding travel of crank 28. Only when pin 30 during the backward movement of the crank into its inoperative position (Figs. 1 and 2) strikes against the lever 37 and oscillates the same in downward direction, the rod 39 is lifted and liberates the bar 14 so that, if this bar had been previously lifted out of notch 15, it can now shift to the left and effect a fresh feeding of the calculating shaft.

The auxiliary gear which maintains locked the main locking mechanism of the motor drive during the movement of the calculating shaft consists therefore of an auxiliary slide adapted to be brought into the path of the main locking slide.

In accurately the same manner other auxiliary slides, which get into the path of the main locking bar 14, are provided in order to prevent releasing of the motor drive during the movement of the carriage, the movement of the accumulating drum and the movement of the function keys.

II. The locking of the mechanism for releasing the motor in dependency on the carriage movement

As can be seen from the top plan view shown in Fig. 4, a pawl 41 securely holds the carriage on the stop 42 in the actual position. This pawl presses then an axle 43 into the extreme position shown in Fig. 4. In this extreme position a bell crank lever 44 oscillatable about a pin 45 and coupled with the pawl by a rod 43*a* is held in the position shown in full lines. This bell crank lever 44 engages on a rod 46. If the pawl 41 is pulled out of the path of the stops (Fig. 4, position shown in dash dot lines) the stop 42 jumps upwards into the position shown in dash dot line and oscillates the lever 44 also into the position shown in dash dot lines, that is, the bar 46 is pulled to the left in the direction of the arrow shown in Fig. 4. In Fig. 1 this rod 46 is shown in elevation. It engages in turn on a bell crank lever 48 oscillatable about a pin 47, the end face 49 of the horizontal arm of this bell crank lever being situated according to its position in or outside the path of the bent over end 40 of bar 14.

When the pawl 41 is in the position shown in dash dot lines the bell crank lever 48 is also in the position shown in dash dot lines so that its end face 49 is in the path of the bent over end 40, as the slidable locking bar 14 cannot shift to the left and consequently the motor cannot yet be released. Only when the carriage has jumped to the next following column, in which an other stop bears against pawl 41 and presses this pawl into the position shown in Fig. 4 in full lines, the end face 49 of the bell crank lever 48 has been lifted out of the path of the bent over end 40, so that the new calculation operation can be carried out, as the bar 14 has been liberated by the previously depressed motor key.

III. The locking of the releasing mechanism of the motor in dependency on the movement of the accumulating mechanism drum

As can be seen from Figs. 5 and 6, a cam drum 50 rotates with the accumulating mechanism drum until a cam 51 strikes against a coordinated abutment 52. At the beginning of the movement of the accumulating drum, the abutments 52, as is known, are removed from the path of the cam drum 50 (Fig. 6). An angle lever 54, 54*a*, oscillatable about a pin 53, is coupled with the group of abutments 52. As long as one of the abutments 52 is depressed by a cam 51 of cam drum 50, the angle lever 54, 54*a* and a rod 55 are in the position shown in Fig. 5 and thus holds the end face 58 of a bell crank lever 56, pivotable about a pin 47, in opposition to the action of a spring 57, out of the path of the bent over end 40 of the main locking bar 14. If at the beginning of the rotation of the accumulating mechanism the abutments 52 are removed from the path of cam 51 (as shown in Fig. 6), the angle lever 54, 54*a* is oscillated about pin 53, whereby the bell crank lever 56 suddenly moves into the position shown in Fig. 6, in which its end face 58 is on the path of the bent over end 40 of the main locking bar 14, so that this bar cannot move towards the left, and consequently during the movement phase of the accumulating mechanism drum no fresh calculation can be carried out.

IV. The locking of the releasing mechanism of the motor in dependency on the movement of a function key

As can be seen from Fig. 7, which shows an inoperative position and from Fig. 8 which shows an intermediate position, a function key, for instance F when depressed, pushes a slide 60 towards the right by means of its inclined face 59. This slide oscillates by its inclined face 61 a bell crank lever 63 oscillatable about pin 62. This bell crank lever oscillates, through the intermediary of a connecting rod 64, a bell crank lever 66 oscillatable about a pin 65, and thereby lowers a slide 67 so that the lower edge of this slide, during the depression of the function key F, gets into the path of the bent over end 40 of the main locking bar 14. As soon as the function key has been pressed into its lowest position, the slide 60 can suddenly engage, under the action of its tension spring 68, into the notch 69 of the function key provided for this purpose and thus liberate again the angle lever 63, so that under the action of the spring 70 the slide 67 is again pulled out of the path of the main locking bar 14.

HERMANN RAUH.

PUBLISHED

MAY 25, 1943.

BY A. P. C.

H. RAUH

MOTOR KEY FEEDING FOR ACCOUNTING MACHINES

Filed Dec. 8, 1939

Serial No. 308,262

4 Sheets-Sheet 1

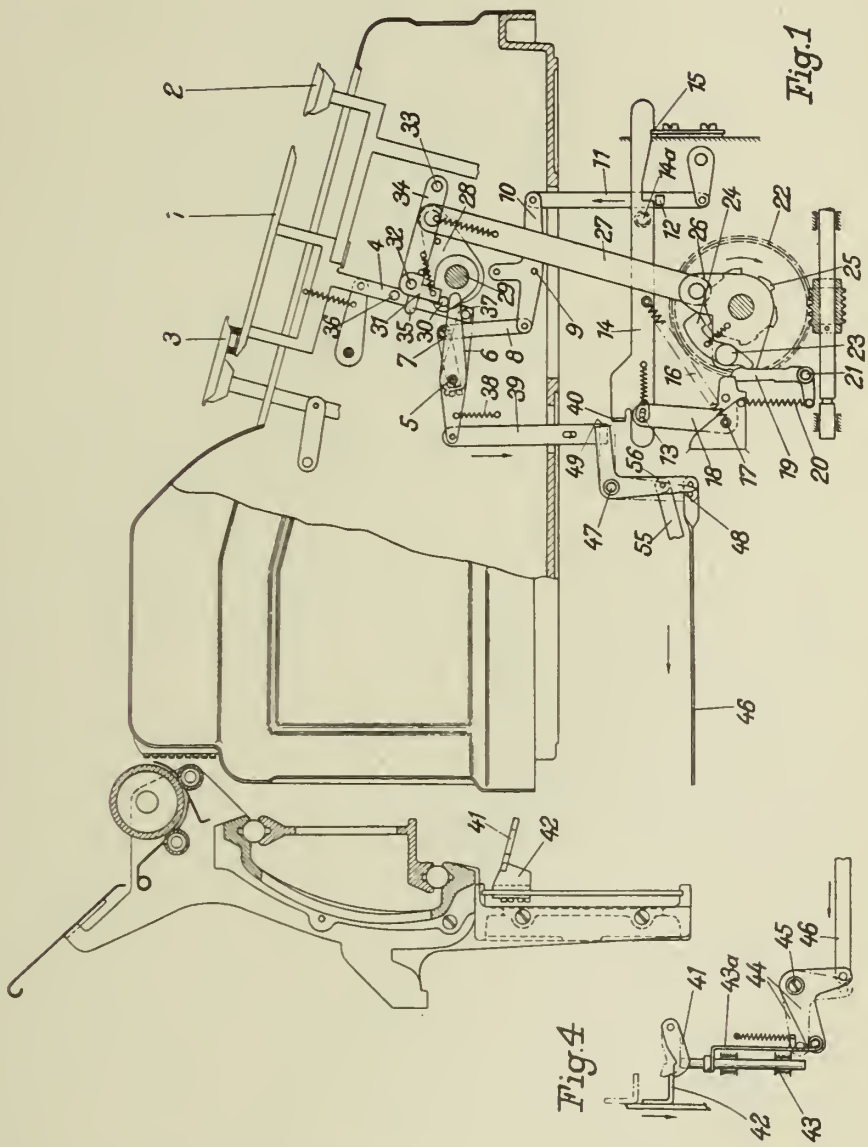

Inventor:
H. Rauh
By R. F. Neuendorff
Atty

PUBLISHED MAY 25, 1943. BY A. P. C.

H. RAUH

MOTOR KEY FEEDING FOR ACCOUNTING MACHINES

Filed Dec. 8, 1939

Serial No. 308,262

4 Sheets-Sheet 2

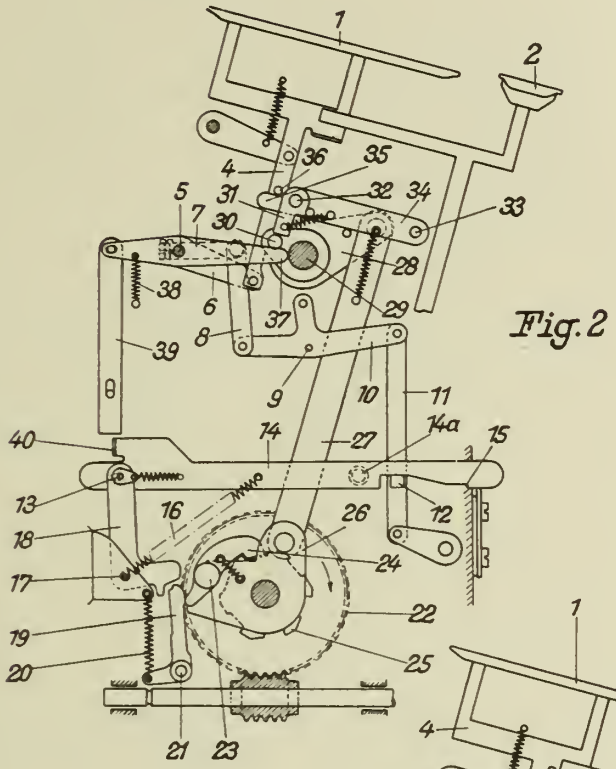

Fig. 2

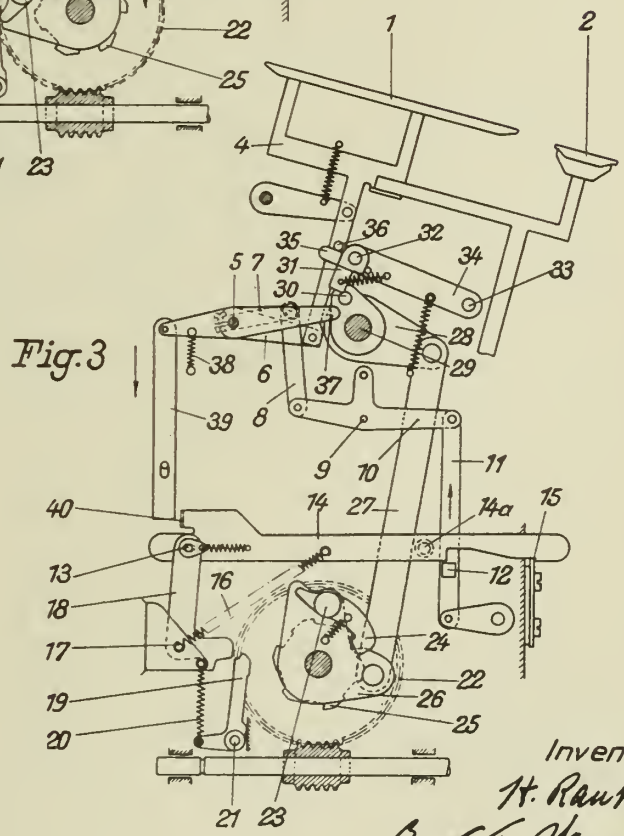

Fig. 3

Inventor:
H. Rauh
By C. F. Windsorth
Atty

PUBLISHED

MAY 25, 1943.

BY A. P. C.

H. RAUH

MOTOR KEY FEEDING FOR ACCOUNTING MACHINES

Filed Dec. 8, 1939

Serial No. 308,262

4 Sheets-Sheet 3

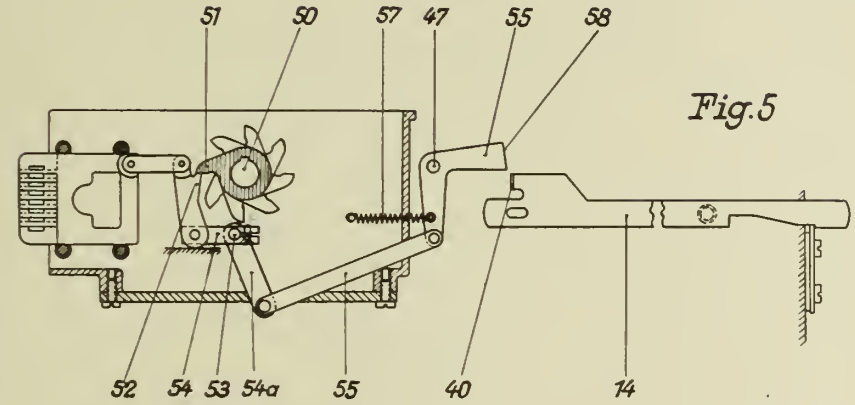

Fig.5

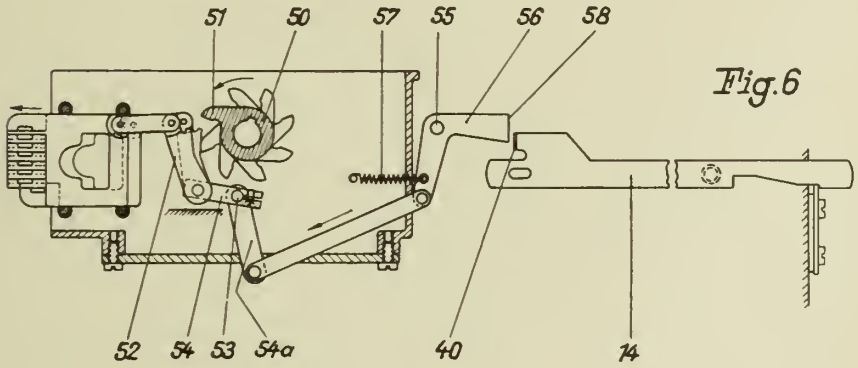

Fig.6

Inventor:
H. Rauh
By E. F. Wenderoth
Atty

PUBLISHED
MAY 25, 1943.
BY A. P. C.

H. RAUH
MOTOR KEY FEEDING FOR ACCOUNTING MACHINES
Filed Dec. 8, 1939

Serial No.
308,262
4 Sheets-Sheet 4

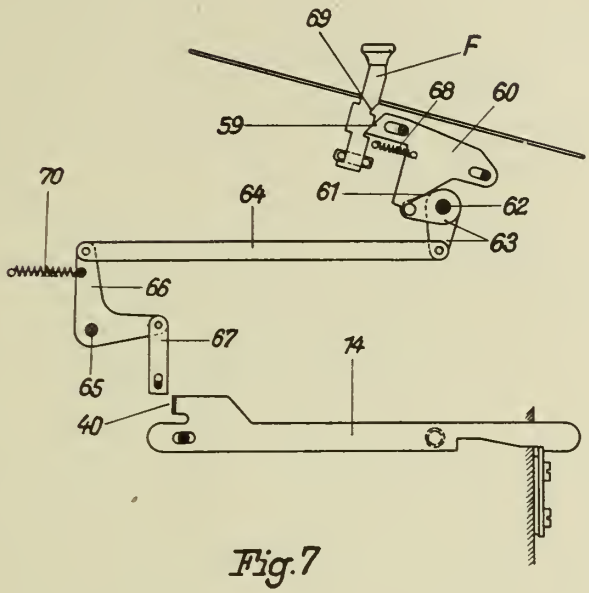

Fig. 7

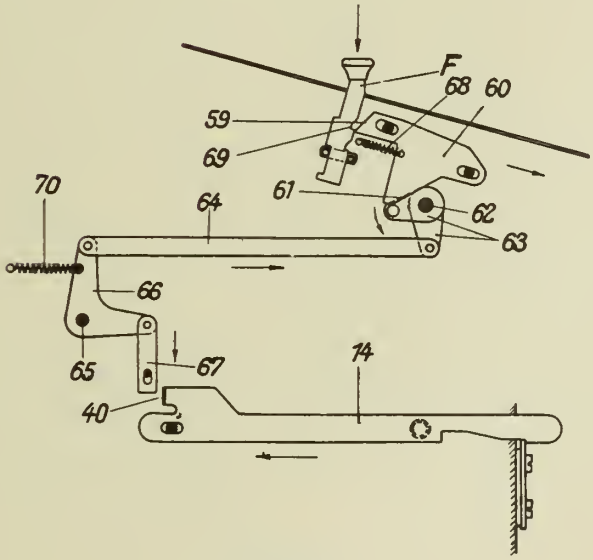

Fig. 8

Inventor:
H. Rauh
By E. F. Okenkrotte
Atty

Published May 25, 1943

Serial No. 308,278

ALIEN PROPERTY CUSTODIAN

PRINTING DEVICE FOR SCALES

Arthur Hahn, Balingen, Germany; vested in the Alien Property Custodian

Application filed December 8, 1939

This application is division of applicant's copending application Serial No. 179,565, filed December 13, 1937, and my application Serial No. 308,277, filed Dec. 8, 1939.

The present invention relates to a thin sheet metal disc provided with cut-out portions which cooperate with feelers so that the latter will set the type wheels of the printing weighing scales disclosed in said applications. It is an object of the invention to provide a cut out portion in the disc with two opposite sets of stepped cut-out portions to accommodate two feelers for two different settings of the number digits corresponding to the weight units of the scale.

Further objects will be apparent from the following description taken in connection with the accompanying drawing in which:

Figure 1 is a front view of the disc,

Fig. 2 is a plan view of the feelers in a set position on the disc with the latter shown partially in section, and

Fig. 3 is a side view of Fig. 2 with the feelers in section.

This invention relates to a part of the setting mechanism for the printing device disclosed in said applications and comprises a thin sheet metal disc **4** provided with cut-out portions forming stepped stop sections **5**, **6** and **7**. The disc **4** may be stamped out in any usual manner and in the form illustrated in Fig. 4 the stepped stop section **5** may indicate the units, the sections **6** the tens and the section **7** the hundreds. For instance each unit section has ten groups of ten stops, that is a stop for each, the tens section **6** has ten stops and the hundreds section **7** has five stops to a maximum of five hundred. Such a series of divisions and sub-divisions may be used for metric weight measures but for ounces and pounds the sections **5** are divided into fifteen stops, the sections **6** into nine stops and the sections **7** into four stops.

Figure 1 of the drawing illustrates the disc itself whereas Figs. 2 and 3 illustrate the cooperation of the feelers **13'**, **13''**, and **13'''** in contact with the disc on the assumption that an object or material is weighed which has a weight of 247, the actual measure of weight being immaterial for purpose of illustration and the feelers occupying the steps on line II—II of Fig. 1. Figs. 2 and 3 also illustrate the reinforcing member **34** with the bar **33** against the side of the disc **4** to maintain the disc **4** in a rigid position during the setting operation. The locking bar **27** acts in cooperation with one of the grooves **28** to lock the disc **4** against accidental rotation.

Figs. 2 and 3 illustrate the cooperation of two feelers **13''**, **13'** in the cut out portion as defined by the oppositely arranged stepped stop sections **5** and **6**.

ARTHUR HAHN.

PUBLISHED
MAY 25, 1943.
BY A. P. C.

A. HAHN
PRINTING DEVICE FOR SCALES
Original Filed Dec. 13, 1937

Serial No.
308,278

Fig. 1.

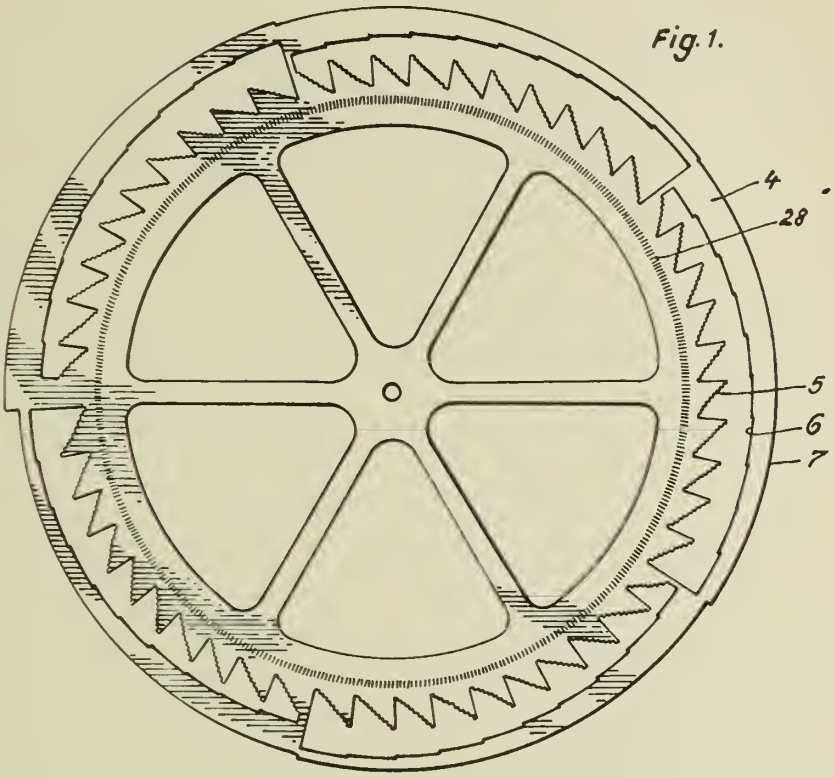

Fig. 2.

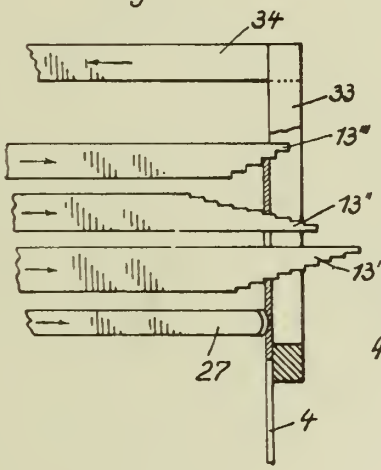

Fig. 3.

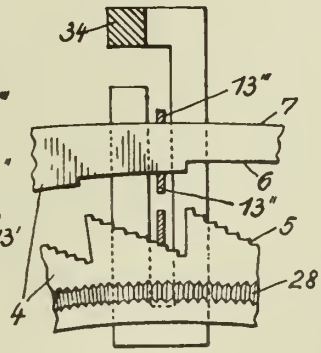

Inventor:
Arthur Hahn
Young, Emery & Thompson
Attorneys

Published May 25, 1943

Serial No. 309,053

ALIEN PROPERTY CUSTODIAN

ARRANGEMENT FOR PHOTOGRAPHICALLY RECORDING VARIABLE PROCESSES

Heinrich Kaiser, Jena, Germany; vested in the Alien Property Custodian

Application filed December 13, 1939

This invention relates to an arrangement for photographically recording variable processes by means of a beam of light, in which case a light source, i. e., a filament of an incandescent lamp, a brightly illuminated slit or the like, is projected on a recording surface by means of an objective and an oscillating mirror controlled by the variable processes. This arrangement differs from the arrangements hitherto employed for the above-mentoined purpose in that the light source is projected by the objective first on a field lens which projects an image of the oscillating mirror on a further lens, i. e., the image lens, which in turn projects on the recording surface the image of the light source projected on the field lens. The essential feature of the invention is therefore the introduction of an intermediate projection of the light source or slit in such recording arrangements, whereby it is possible to bring about very important improvements in arrangements of the above-indicated character.

To obtain a distinct record also in the case of rapidly occurring processes, the light spot projected on the recording surface must be sufficiently bright. On the other hand, the diameter of the ray when recording must be very small, in order to enable a reading of the deflections and the corresponding periods with a certain accuracy. These requirements cannot be fulfilled in a satisfactory manner with the arrangements hitherto employed, whereas by means of the present invention it has been found that it is possible to shorten the effective length of the beam of light to such an extent as to attain a very distinct and sharp record.

The invention is of particular importance for arrangements adapted to record various processes in the form of curves which overlap each other at certain points or are in spaced relation to each other on a relatively small recording surface. It has been found that the most favorable conditions as to brightness and sharpness of the image are obtained when employing lengths of the beam of light of about 50 to 100 mm. However, in this case it was not possible with the arrangement hitherto known to arrange various oscillograph loops in spaced relation to each other. With the introduction of an intermediate projection of the light source or an illuminated slip on a field lens according to the invention various processes may be recorded on a surface in a particularly convenient manner. In this case a particular field lens is allotted according to the invention to each oscillating mirror system, a common image lens being, however, provided for all systems. Furthermore, suitable deviating devices, by means of which the images of the different oscillating mirrors are arranged in spaced relation to one another, are allotted to the individual oscillating mirror systems and the fields of view within which move the images of the lighted slit are optically in alignment or approximately in alignment. To enable the employment of optical systems of the same type for the projection of the images of the oscillating mirrors on the field lens, all oscillating mirror systems are preferably arranged at the same distance from the image lens; i. e., on a circular arc or a spherical surface.

In arrangements according to the invention it is, furthermore, possible to employ the field lens for the multiple recording of a process; for instance, for the simultaneous observation and recording as well as for the illumination of the oscillating mirrors. This is accomplished by the fact that in the case of an oscillating mirror system, the free aperture of the cylindrical lens determines the length of the slit image and therefore the width of the field lens strip which is traversed by the rays when projecting the slit. This free aperture may be kept very small. Consequently, only a relatively narrow horizontal strip of the field lens is necessary. The portions of the field lens lying above and below this strip may then be employed for the multiple recording and illumination of the mirrors as will be seen from the forms of the invention hereinafter described.

In the arrangement according to the invention it may be so arranged that the field lens on which is reproduced the intermediate image of the illuminated slit be subdivided into individual strip-shaped zones which run in parallel relation to the direction of movement of the beam of light and that particular deviating devices are provided which allot a particular pupil to each field; i. e., a particular image of the mirror, so that auxiliary paths of ray are formed for the further utilization of the field lens and image lens besides the main path of ray provided for the photographic record. Achromatic wedges may be employed as suitable deviating devices; also the arrangement of lenses whose centers are displaced with respect to one another may be employed as deviating devices; or the field lens may be combined with the deviating devices by dividing the field lens itself into individual lens sections whose centers are displaced with respect to one another; in this manner the achromatic wedges are dispensed with. In this case, the auxiliary paths

of ray caused by the deviating devices may be employed according to the invention to produce at the same time, for instance, by means of an oscillating mirror the photographic record in the main path of rays and various records of the same process or also a visual observation of the oscillogram. Furthermore, the oscillating mirror may be illuminated by the single light source with the aid of the auxiliary paths of ray brought about by the deviating devices by employing at the same time the main and auxiliary paths of ray for the different purposes. In this case the width of the slit for the path of ray for the visual observation may be made larger than the width of the slit for recording. This may be accomplished by arranging the slits on the field lens; i. e., by covering the portion of the field lens, provided for the illumination of the oscillating mirror, in the corresponding auxiliary path of ray so as to form two slits of different width lying one below the other.

In this manner in arrangements having a plurality of oscillating mirror systems, all mirrors may be illuminated by a single light source by producing as already mentioned above, auxiliary paths of ray with the aid of deviating devices arranged in front of the field lenses and by causing the illuminated slit to be brought to the point where the image lens in the corresponding path of ray projects the common image of the field lenses. A luminous slit image is there produced on each field lens and acts as a light source for the corresponding mirror. If the portion of the lenses symmetrical to the axis of symmetry thereof is utilized as the main path of ray, the perpendicular to the mirror is inclined by a small amount with respect to the axis of symmetry so that the image of the slit reflected by the mirror and projected by the objective is produced on the central portion of the field lens.

For the corresponding paths of ray of each individual oscillating mirror system, extending one above or below the other, the same deviating devices may be employed in front of the image lens which are used to arrange the images of the mirrors close to one another.

For a better distinction, the luminous rays which come from the different oscillating mirror systems and which serve for the visual observation may in addition be differently colored, in which case color filters are employed, arranged in front of the portions of the field lenses which serve as light sources for the visual observation.

Further details of the invention will be apparent from the following description taken in connection with the accompanying drawings, in which

Fig. 1 shows the beam of light recording arrangement hitherto employed.

Fig. 2 is a plan view of an arrangement according to the invention as applied to a single-loop oscillograph.

Fig. 3 is a part lateral view of the arrangement shown in Fig. 2.

Fig. 4 shows one form of the arrangement according to the invention with one main path of ray and two auxiliary paths of ray.

Fig. 5 shows a view of the field lens shown in Fig. 4.

Fig. 6 shows a field lens which combines the effect of a simple field lens with the effect of the deviating devices and which may be employed in the arrangement shown in Fig. 4.

Fig. 7 shows an arrangement according to the invention with one main path of ray and three auxiliary paths of ray.

Fig. 8 shows a view of the field lens shown in Fig. 7.

Fig. 9 shows the arrangement according to the invention as applied to a multiple-loop oscillograph.

Fig. 10 shows a view of the pupil field on the image lens shown in Fig. 9.

Fig. 11 shows a view of the pupil field on the image lens of a multiple-loop oscillograph arrangement with a main path of ray and two auxiliary paths of ray.

Fig. 12 shows a portion of a photographic record of two variable processes which are recorded one upon the other and

Fig. 13 shows the same processes which are recorded in spaced relation to each other.

In Fig. 1, Q denotes an illuminated slit or the filament of a single-filament lamp. This slit is sharply projected on the paper P by means of the oscillating mirror *Sp* and an objective 0 arranged in front of the mirror. In front of the paper is disposed a cylindrical lens Z which is ineffective in the cross-sectional view shown but projects the aperture of the objective 0 on the paper in a sectional plane perpendicular to the first plane.

The arrangement according to the invention is shown in principle in Figs. 2 and 3 in which the light source Q which is preferably represented by an illuminated slit is not directly projected on the paper but first on a field lens F. The slit image reproduced in F is sharply projected on the paper P by a further lens L. However, the field lens projects the oscillating mirror *Sp* on the lens L. In the sectional plane shown in Fig. 3 perpendicular to the sectional plane shown in Fig. 2 the aperture of the lens L, i. e. the image of the oscillating mirror *Sp* produced there is projected on the paper P by the cylindrical lens Z.

The images to be projected according to the arrangements shown in Figs. 2 and 3 may be magnified or reduced at will. Thus, for instance, the distance OF may be made very great in order to remove the spacious difficulties, for instance, when adjusting the optical arrangement. A deciding factor for the light intensity and the diffusion at the image fringes influencing the sharpness of the image is only the aperture ratio of the image lens L, since the image of the oscillating mirror is projected on this lens.

In Fig. 4 is shown a form of an arrangement according to the invention for the multiple utilization of the field lens. The portion of the field lens necessary for the main record is shown shaded. In front of the other portions of the field lens are arranged achromatic wedges K, the purpose of which is to allot to each field a particular pupil; i. e., a particular image of the mirror. The rays coming from the light source Q are caused by the total reflection prism TP_1 to be deflected towards the field lens F and illuminate the oscillating mirror and serve both for the projection in the main path of ray and for the observation of the oscillating processes in the auxiliary path of ray, since they are caused by a further total reflection prism TP_2 to be deviated towards a further cylindrical lens Z′ and are projected on a ground glass M.

Fig. 5 shows the pupils for the three different paths of ray on the field lens. The rays passing in the upper path of ray 1 through the lens L do not change their position, whereas the central beam of rays 3 is a narrow luminous band for the photographic record and the lower beam of rays

4 is also a narrow luminous band for the visual observation.

Fig. 6 shows a field lens made of three lens sections which may be employed in an arrangement according to Fig. 4 instead of the simple field lens F and the achromatic wedges K. The center of the central lens section lies on the main axis, whereas the centers of the two outer sections are displaced in the outward direction.

In Fig. 7 is shown a path of ray divided into four parts, in which case both the illumination and the attainment of different slit widths is made possible from one and the same light source Q. To this end, the upper half of the field lens F is covered with the exception of two differently wide strips and is therefore designed as a double light slit as shown in Fig. 8 in the paths of ray 1 and 2. Fig. 8 shows in turn the pupils on the field lens F. The deviation is effected according to Fig. 7 by a wedge strip K which has a different deviating angle for every path of ray. As shown in Fig. 8 the slit images projected by the oscillating mirror Sp are reproduced on the lower half of the field lens F. The wide slit image 1 reproduced on the upper fourth portion of the field lens is again projected through the cylindrical lens Z' on the ground glass M by the lowest fourth portion 4 when reflected by the oscillating mirror and serves for the visual observation. On the upper inner fourth portion of the field lens is reproduced the narrow illumination slit image 2 for the photographic record. On the lower inner fourth portion of the field lens is reproduced the narrower slit image 3 reflected by the oscillating mirror and which is then projected on the photographic paper by the lens L.

Fig. 9 shows an arrangement according to the invention as applied to a multiple-loop oscillograph. The individual casings G_1, G_2, G_3, G_4 and G_5 contain the different measuring loops as well as mirrors Sp secured to the latter and objectives O arranged in the casings as lens windows. A field lens F is allotted to each measuring loop. The individual systems are so arranged that the images of the mirrors projected by F coincide with one another. Short of the point where the image is produced are arranged, however, deviating devices A, by means of which the images of the different oscillating mirrors are brought close to one another and the fields of view in which move the images of the light sources or the slit images are brought into alignment or approximately into alignment by the same devices. In Fig. 9 are shown mirrors as deviating devices for the two outer oscillating mirror systems. Here reflection prisms are preferably employed. Achromatic wedges are shown for the two next following inner systems. The purpose of the deviating device consists in that the arrangement of a further image lens L for each of the individual systems may be dispensed with and in that the five slit images reproduced on the field lenses F are projected simultaneously on a single lens for all five systems. Fig. 10 shows how the images of the five oscillating mirrors lie on the lens L when viewed from the paper. In the arrangement shown in Fig. 9 the individual oscillating mirror systems are arranged on a circular arc at the same distance from the image lens L in order to enable the use of the same optical systems. The individual systems may also be arranged on a spherical surface. On the other hand, the images to be projected may also be magnified or reduced at will in order to be independent of the choice of the distance of the systems from the lens L. Also the pupils, i. e., the images of the oscillating mirrors may be arranged side by side in any suitable manner.

Fig. 11 shows on the lens L the rows of pupils for three different paths of ray, for instance, according to Fig. 4 when using at the same time a plurality of oscillating mirror systems as shown in Fig. 9, to which is applied the principle according to the invention. In this case, the row 1 of pupils corresponds to the auxiliary path of ray for the illumination of all oscillating mirror systems from one light source, whereas the row 2 corresponds to the main path of ray for the photographic record and the row 3 corresponds to the auxiliary path of ray for the visual observation. Fig. 4 shows a side elevational view of such an arrangement.

Figs. 12 and 13 show the result of the photographic record of a double-loop oscillograph. In this case the images of two variable processes as shown in Fig. 12 lie one upon the other, whereas those in Fig. 13 are shown in spaced relation to each other. The last record is obtained when selecting a somewhat greater deflecting angle of the deflecting devices A shown in Fig. 9.

HEINRICH KAISER.

PUBLISHED

MAY 25, 1943.

BY A. P. C.

H. KAISER

ARRANGEMENT FOR PHOTOGRAPHICALLY RECORDING VARIABLE PROCESSES

Filed Dec. 13, 1939

Serial No. 309,053

2 Sheets-Sheet 1

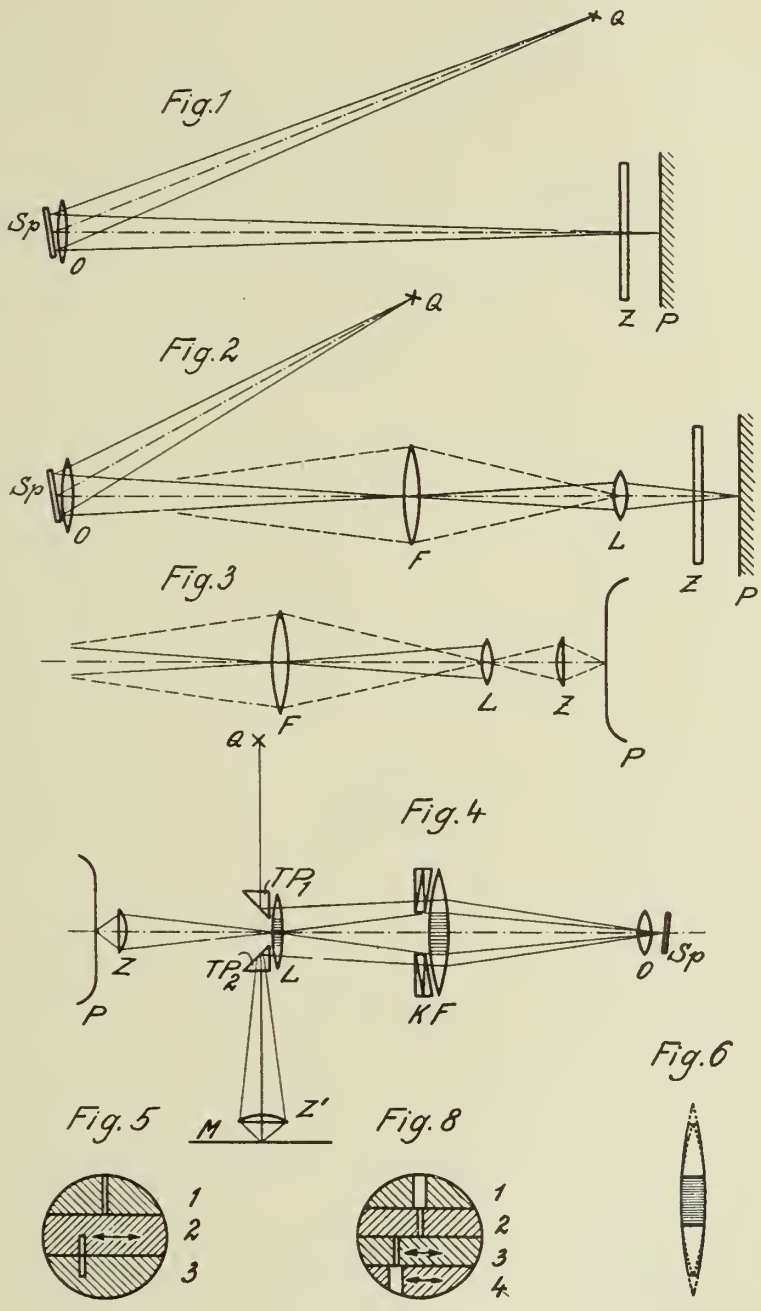

Inventor
Heinrich Kaiser

By: Richardson and Geier

Atty's.
388

PUBLISHED

MAY 25, 1943.

BY A. P. C.

H. KAISER

ARRANGEMENT FOR PHOTOGRAPHICALLY RECORDING VARIABLE PROCESSES

Filed Dec. 13, 1939

Serial No. 309,053

2 Sheets-Sheet 2

Fig. 7

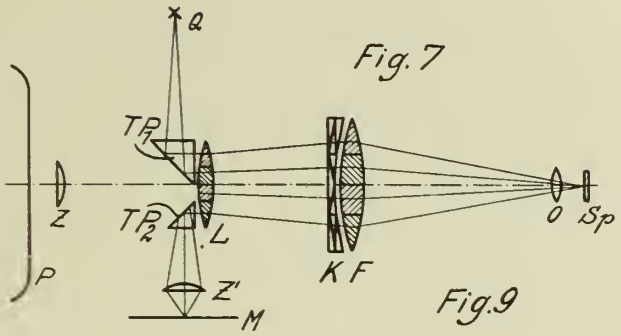

Fig. 9

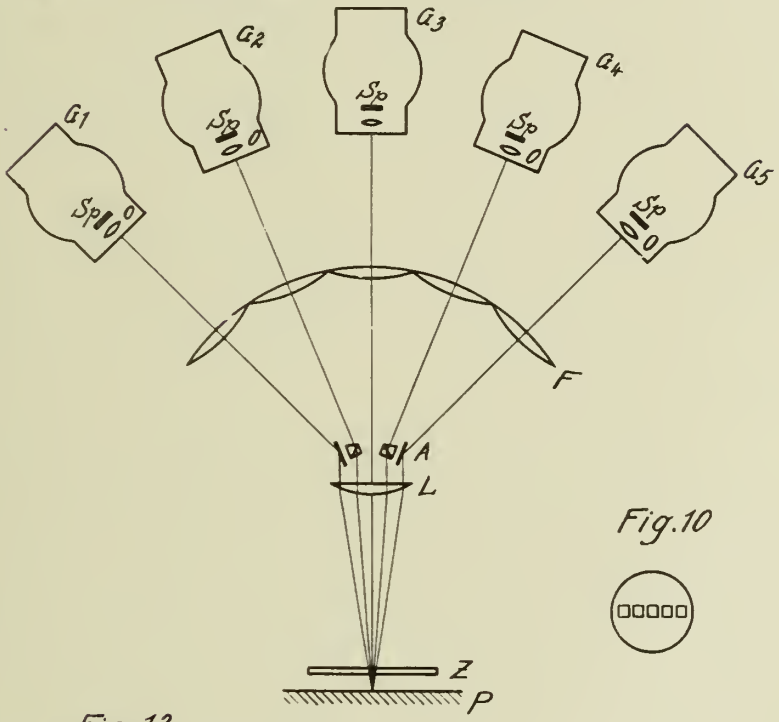

Fig. 10

Fig. 12

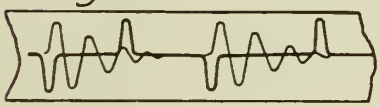

Fig. 13

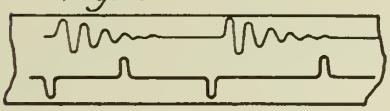

Fig. 11

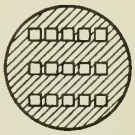

Inventor
Heinrich Kaiser

By: Richardson & Geier
Atty's.
388

Published May 25, 1943

Serial No. 309,110

ALIEN PROPERTY CUSTODIAN

PROCESS FOR DRYING BY CENTRIFUGAL ACTION OF JUICY MATERIALS WITH PARTICULAR REGARD TO OLIVES

Elio Adolfo Perogio, Sanseverino Marche, Italy; vested in the Alien Property Custodian

Application filed December 13, 1939

This invention has for its object to provide a process for drying by centrifugal action of juicy materials, by such a denomination being designed the materials composed of liquid and solid parts, more or less intimately mixed and united. This class of materials comprehends all fruits with particular regard to olives. The scope of the process is to provide the practically complete drying of such materials, namely the extraction of the liquid parts.

The drying by centrifugal means of these materials, olives in particular, has been tried many times; but the practical results obtained were so poor, that the problem is not yet solved and generally it is indicated as insolvable. It is effectively insolvable when we employ the usual process of scission of liquid mixtures by centrifugal action.

By using the process, which is the object of the invention, the problem is totally solved.

This process is based on the following consideration, reached by the inventor subsequent to diligent and numerous observations and experiments: When a material composed of mixed liquid and solid particles is submitted to a centrifugal action, the solid particles, which generally have an higher specific weight than the liquid particles, are exposed to comparatively stronger centrifugal forces, and therefore are the first to reach the peripherical zones; herein, due to the greater distance from the rotation center, they are exposed to even stronger centrifugal forces, with the consequent auto-formation of a highly pressed outer layer of solid material, impending the way to the liquid material kept behind, and the more rapidly and completely this occurs, the higher is the rotation speed and the stronger the centrifugal action. Therefore while the centrifugal action actually succeeds in separating the liquid from the solid components of the material, the practical result is lost because all liquid remains in the centrifugal drum.

The fundamental characteristic of the process, which is the object of the invention, consists in the fact that special means are put inside the centrifugal drum with the material to be dried, allowing the drainage towards the outside of the liquid collected behind the solid layer or crust formed in the peripherical zones as a consequence of the centrifugal action.

Substantially the drainage means are channels which pass through the solid crust and reach the surface of the centrifugal drum, preferably the peripherical surface of the drum, eventually also one or both the lateral surfaces of its two bases; these channels may be of any form and section, large, small, and even capillary in dimension.

Furthermore, according to the invention, to speed up the drainage of the liquid, namely its expulsion through these channels, inert matters of a highly specific weight, preferably free from restraints, are placed in the innermost part of the drum, against the inner surface of the mass exposed to the centrifugal action, acting, in consequence of the strong centrifugal force of the rotating drum, upon the mass as radial pistons, constraining the liquid, which is pressed between these inert masses and the outer peripherical layer of solid matter, to an expelling compression in addition to the centrifugal force which already acts upon the same liquid.

As drainage means can be used, i. e., layers of porous materials, as i. e., networks or felted fabrics of human or animal hairs or the like, inside of which the mass is subdivided and enclosed as inside tubes, which are placed in the centrifugal drum, stuffed with the material to be treated, side by side, either parallel to the rotation axis, or in circles normal to this axis, or in both ways. In this case the drainage channels are formed by the substantially capillary cavities of said porous materials. The porous layer or sheet, instead as in the form of a tube can be placed in any other way around the various portions in which the mass is subdivided, i. e., by crossing two bands, placing on the crossing the suitable portion of the mass, and thereafter reversing on the mass the four ends of the two bands. The fibrous layer may also simply be mixed with the mass in small pieces or in the form of ribbons etc.

The same result may be obtained by suitably adapting the holed surface of the drum, i. e., forming on it deep furrows having the section of a V or a wedge. The summit of each V or wedge enter in the inner part of the mass and plunge in the liquid, while the solid layer accumulates itself in the cavities existing between adjacent V or wedges: in this manner the liquid goes out through the holes of the summits and sides of the V or wedges.

Evidently many other embodiments are possible. The drum may also be placed vertically, and the liquid drained through the bottom.

As for the inert heavy bodies acting from the inside as radial pistons, may be used, i. e., bars or, even better, lead plates, eventually with bevelled edges, in order that they may run in a radial manner keeping some continuity in their outer surface. Instead of plates, bags full of gun shots, or other equivalent means can be used. There-

fore, instead of lead, iron or other material, according to the different applications, may be used.

As above stated, this process provides a particularly useful and interesting application in the production of olive oil, wherein oil is produced by various types of presses, all effort to extract oil by centrifugal means having failed. With the process, which is the object of this invention, all the bulky installations of the presses of "first pressing," which is used to day at a waste of money and labor, to express the first abundant liquid contents from the olives, and then to pass the pulp to the strong pression of the "second pressing." In the system of "first pressing" one needs in fact numerous filtering disks in pile, whose charging and maintainance in pression and discharge requires long time, hard labor, great efforts and cares and the use of staies, levers, etc. Furthermore, generally it is not possible to pass the pulp to the "second pressing" without a previous grounding of the same, while with the process according to the invention the pulp remaining after the centrifugal operation goes directly from the centrifugal apparatus to the press of the "second pressing." This means an enormous saving of filtering disks and the elimination of the danger of rancidity and formation of free fatty acid due to the sediments setting on the disks, sediments which can not be easily eliminated.

Of course the process, which is the object of the invention, may be applied not only to the olive oil industry but to all other cases where it may be useful and advantageous, without going beyond the concern and protection of the present patent. Therefore it is also obvious that the governing examples above described do not limit in any way the invention, namely any other application adhering to the extremes of the present invention will go under the concern and protection of this patent.

ELIO ADOLFO PEROGIO.

Published May 25, 1943

Serial No. 309,655

ALIEN PROPERTY CUSTODIAN

SUPPORTING SURFACES FOR AIRCRAFTS

Louis Béchereau, Paris, France; vested in the Alien Property Custodian

Application filed December 16, 1939

The present invention relates to variable curvature supporting surfaces for aircrafts, of the kind of those including at least two elementary wings or wing portions, or again at least one wing and one aileron, these two elements being adapted, either, in normal flight, to be conjugated together so as to constitute a main wing, or under lift-increase flying conditions, to be displaced or pivoted with respect to each other so as to improve the lift, with a slot effect.

The invention is more especially, although not exclusively concerned, among these supporting surfaces, with those in which the movable elements thereof are adapted to modify both the lift and the lateral stability.

The chief object of the present invention is to provide a supporting surface of the type above described which is has remarkable lift increase properties while ensuring, in normal flying conditions, a lift to drag ratio as high as possible, and eliminating any disturbance as might result from the slot effect.

According to an essential feature of the present invention, the supporting surface includes at least one slot arranged to form a fixed passage, preferably as oblique as possible with respect to the chord of the wing section and I combine this slot with the elements which constitute said supporting surface in such manner that the pivoting of the movable elements can control the flow of air through the above mentioned passage.

According to another feature of the present invention, which relates to supporting surfaces of the kind above described which include wing elements or ailerons movable by pivoting, the pivot axis is placed as close as possible to the upper side of the supporting surface, eventually at the level of the upper side in question or even in the thickness of the main wing section, the system being arranged in such manner as to ensure, however, the correct flow of air through the slot or slots, when the elements are pivoted so as to increase the lift.

According to still another feature of the present invention, in supporting surfaces as above referred to, and especially, in the case of surfaces including pivoting elements, when the pivot axis is arranged as above explained, I provide means for balancing the aerodynamic reactions on said wing elements or ailerons, when they are pivoted.

According to still another feature of the present invention, in supporting surfaces of the kind in question including, in a broad manner, a slot provided between wing elements, I provide, at the end of said slot which corresponds to the wing under side (or even the upper side), shutting means adapted to restore the continuity of the fore and aft section, under normal flying conditions, and to open a passage, under lift increase flying conditions, these means preferably having their movements combined with those of the movable wing element or elements, eventually in such manner as to cooperate in ensuring the balancing of the elements, according to the preceding feature.

Other features of the present invention will result from the following detailed description of some specific embodiments thereof.

Preferred embodiments of the present invention will be hereinafter described, with reference to the accompanying drawings, given merely by way of example, and in which:

Fig. 1 is a fore and aft section of a double wing system according to the present invention, the rear part forming a curvature modifying element, and also an aileron;

Fig. 2 is a similar view corresponding to another embodiment of the invention;

Figs. 3, 4, 5, 6 and 7 are similar views corresponding to other embodiments of the invention, respectively.

The invention relates to wing structures of the kind constituted, along at least some portions of the span thereof, by at least two wing elements 1 and 2 adapted to be pivoted with respect to each other in such manner as to produce, by slot effect, a lift increase. This arrangement is, for instance, applied to the case in which the rear wing element 2 is further adapted to act as aileron.

Concerning first the supporting surface, considered as a whole, and also the lateral control means and lift increase control means associated therewith, they are made in any suitable conventional or other manner.

As for the general section of the wing structure thus constituted by the combination of wing elements 1 and 2, I have found that it is advantageous to have recourse to a thick wing section, at least in the center section of the wing (for instance a type 15 section of 25% relative thickness) that is to say thickness in comparison to the length L of the wing section.

It will be advantageous to arrange elements 1 and 2 in such manner that, under normal flying condtions, they join on the upper side, at *a* about at two thirds of the length of the chord from the leading edge of the wing structure. However, it should be well understood that this condition is not at all necessary according to the invention.

Then, concerning the means for controlling the relative pivoting of elements **1** and **2**, and supporting element or elements **1** to be fixed to the body or fuselage of the aircraft, while elements **2** (formed for instance by two parts located on either side of the fuselage) are movable, these means are arranged, according to conventional or other systems, in such manner as to permit the following results:

(*a*) either of simultaneously lowering the two elements **2** in question, for increasing the lift, or

(*b*) of pivoting them respectively in two opposed directions in order to produce the lateral control of the aircraft.

Therefore, each element **2** is capable of being pivoted either upwardly or downwardly from an intermediate position corresponding to normal flying.

Concerning now the means for obtaining the slot effect, it is known that, up to the present time it was held sufficient to provide a slot directly between, on the one hand, the front element **1** and, on the other hand, the rear element **2**. Such a solution did not permit, as a rule, of providing for the mean line of the slot the best possible conditions, and, further, the section of flow could happen to be throttled, when increasing the angle of relative rotation, by the displacement of the nose of element **2**.

According to an essential feature of the present invention, the above mentioned means are provided in such manner as to comply with the following conditions:

a. There is at least one slot, arranged in the form of a passage of fixed section (that is to say of a section uninfluenced by the relative pivoting of the elements) on at least part of its length, this passage being made of any suitable inclination, preferably as great as possible with respect to the chord of the sections of the main wing (the inlet of the slot on the under side being as close as possible to the first third from the front of the fore and aft section of the main wing, or being eventually located in this first third).

b. the section of flow of the air at the outlet (or even at the inlet) of this slot can be adjusted in accordance with the pivoting of the corresponding movable element **2**.

For this purpose, for instance, this passage or slot **17** is arranged between, on the one hand, the front element **1** and, on the other hand, in intermediate element **3**, which is preferably fixed in position, this last mentioned element being arranged in any suitable manner and combined in such manner with the rear element **2** that it bears in a substantially fluidtight manner against said rear element, for at least part of the pivoting of said last mentioned element (although the invention would apply as well to the case in which a portion of the air could pass between elements **3** and **2**).

On the underside of the front element **1**, this intermediate element is provided for instance (Figs. 1 to 3 and 5 to 7) with a section *bc* arranged in such manner, with respect to the outline of said under side that is located opposite, as to form a passage, of fixed or variable section along its length, preferably, this section *bc* and the corresponding outline above mentioned are substantially inclined with respect to the chord of the main wing structure.

On the side of the rear element **2**, this intermediate element is of a section corresponding to the kind of displacements resulting from the relative rotation of parts **1** and **2**. It, as it will be hereinafter supposed, this rotation takes place about an axis **4**, the last mentioned section will be, for instance circular at *de* (Figs. 1 to 3) with the center on said axis **4**, so that the front portion of the upper side of element **2** can, in the course of the rotation, slide along surface *de*.

This sliding displacement can take place between, on the one hand, this surface, and, on the other hand, either another surface of the same outline d^1e^1 (Fig. 1) carried by the front part of the upper-side of movable element **2**, or merely the front nose of this element **2** (Fig. 3).

Besides, it should be well understood that any other arrangement within the scope of the invention can be employed. For instance, as in Figs. 6 and 7, the intermediate element may merely include a bearing surface on which the under side of the movable element comes to rest in straightened position. I might also, as in Fig. 5, combine the respective arrangements of Figs. 1 and 6.

The provision of an intermediate element such as **3** facilitates the adoption of another feature of the invention, which consists in positioning the pivoting axis **4** as close as possible to the under side of the main wing section, or even at the level of this underside or on the inside of the section thereof. The advantage of such an arrangement is that it reduces the projection formed under the wing by parts such as arms **5**, **6** for connecting together elements **1** and **2** (Figs. 1, 2 and 5) or even it eliminates these parts (Figs. 3, 4, 6 and 7).

When use is made of arms **5**, **6** with a pivot **4** on the outside, it is of interest to arrange the whole in such manner that arms **5** do not extend through the rear element **2**, as shown by Fig. 5.

Whatever be the arrangement that is chosen, the whole is completed by means for regulating or controlling the flow of air, through the slot or passage, in accordance to the relative pivoting of the rear element.

Such means may act either at the outlet of the slot on the upper side of the outline of the general wing structure, as shown by Figs. 1 and 6, or at the inlet, on the underside of said outline (Fig. 5), or again both at the inlet and the outlet, as shown by Figs. 2, 3 and 7. But of course, these means might be of a different nature and position.

Supposing first that it is desired to control the passage at the outlet thereof, at *a*. It will suffice, as shown by Fig. 1, to provide, for instance between the upper side of element **2** and the nose d^1 e^1 of said element, a suitable notch or recess, this notch or recess being such that, when the rear element is pivoted downwardly, in order to obtain lift increase flying conditions, as shown in dotted lines by Fig. 1, the section of flow between the trailing edge *a* of element **1** and the surface of said recess *h* tends to increase.

On the contrary, it would be advantageous to provide a fluidtight connection at *a* for pivoting conditions intended to provide the lateral control of the airplane, at least when pivoting the rear element upwardly. For instance, the upper side of element **2** is given a circular outline *fg*, having its center at **4**, which ensures fluidtight contact from the normal flight conditions (solid line of Fig. 1) to the limit position of upward rotation for lateral control (dash-and-dot line of Fig. 1).

If it is desired to control the passage at the inlet, at *b*, use will be made, for instance, of a

flap such as 7 (Figs. 2, 3 and 5) the position of which will be controlled, in accordance to the angular position of element 2, through connecting means such as those those from 9 to 11, between, for instance, this flap and movable element 2, or in any other suitable manner, either mechanical or not.

Such flaps 7 permit, under normal flying conditions, of fully restoring the continuity of the underside outline of the general wing structure. They might eventually be utilized at the outlet, at *a*, on the upper side.

I might also, still for the same purpose, provide, in the cover surface at the inlet of the slot, orifices 13 fitted with valves 14, which would open automatically when turning the parts into the lift increase position, as a consequence of the suction existing at *a*, and therefore in the slot.

Such an arrangement would make it possible to eliminate the intermediate element 3 (Fig. 4) and might be applied to all kinds of wing structures.

Finally, the wings as above described may further include means for balancing the aerodynamic reactions with respect to axis 4, such means being preferably arranged as it will be hereinafter explained.

Whatever be the particular embodiment that is chosen, I obtain a device the operation of which results sufficiently clearly from the above explanations for making it unnecessary to enter into further details. This device has, over the existing devices many advantages, among which the following may be cited:

The device has very remarkable aerodynamic properties, that is to say the lift-to-drag ratio is high under flying conditions and the lift is very great when flying with the lift increase means in the operative position

Furthermore, all the parts of the device are simple and strong.

The lift can be further increase, if so desired, by making use of upper side flaps 16 carried by the rear element.

The invention further includes the following features, which can advantageously be combined with those above described.

According to one of these features, I combine, with the movable elements of the wings, means adapted to coact with the slot for balancing, at least partly, the aerodynamic efforts which tend to create torques preventing or opposing the rotation of the wing elements.

Such an arrangement is particularly useful when axis 4 is located close to the under side. As a matter of fact, in this case, it will be located ahead of the center of thrust of the corresponding element 2, thus producing a couple which opposes rotation of the elements.

In order to provide these means, it suffices, as a rule, to expose to the aerodynamic actions acting on the slot, suitable surfaces which are conjugated in a suitable manner to elements 2.

If, in particular, use is made of flaps such as 7 (Figs. 2 and 3) it is advantageous to make use of the torque resulting from the action of said suction on said flap with respect to its axis 8, in order to balance the torque produced by the aerodynamic forces and other forces which act on element 2. It will suffice the calculate the transmission from 9 to 11 in a suitable manner.

The axis itself may be positioned in such manner as to be suitably eccentric with respect to the center of thrust of the flap, so as to increase the balancing torque. A recess 15 will be provided in the wing for the housing of said flap.

According to another embodiment, which is shown by Figs. 6 and 7, I provide compensating surfaces of elements 2 themselves.

Each of these elements includes, for instance, for this purpose, a kind of flap 18 at its front part, and it is separated from said flap by a slot 22 arranged in such manner as to prolong passage 17, when the parts of the device are pivoted in such manner as to correspond to the lift increase conditions.

It will be readily understood that, with such an arrangement, the action of air through this slot produces a force which exerts, with respect to axis 4, a torque opposed to that created by the aerodynamic actions on the under side of element 2, when the element in question is pivoted. A complementary compensating force can also be produced by the action of the suction existing in a recess 19 provided in the wing above flap 18 and acting on the upper side of said flap.

The fixation of this flap 18 to element 2 will be obtained through any suitable means.

LOUIS BÉCHEREAU.

PUBLISHED

MAY 25, 1943.

BY A. P. C.

L. BÉCHEREAU

SUPPORTING SURFACES FOR AIRCRAFTS

Filed Dec. 16, 1939

Serial No.

309,655

4 Sheets-Sheet 1

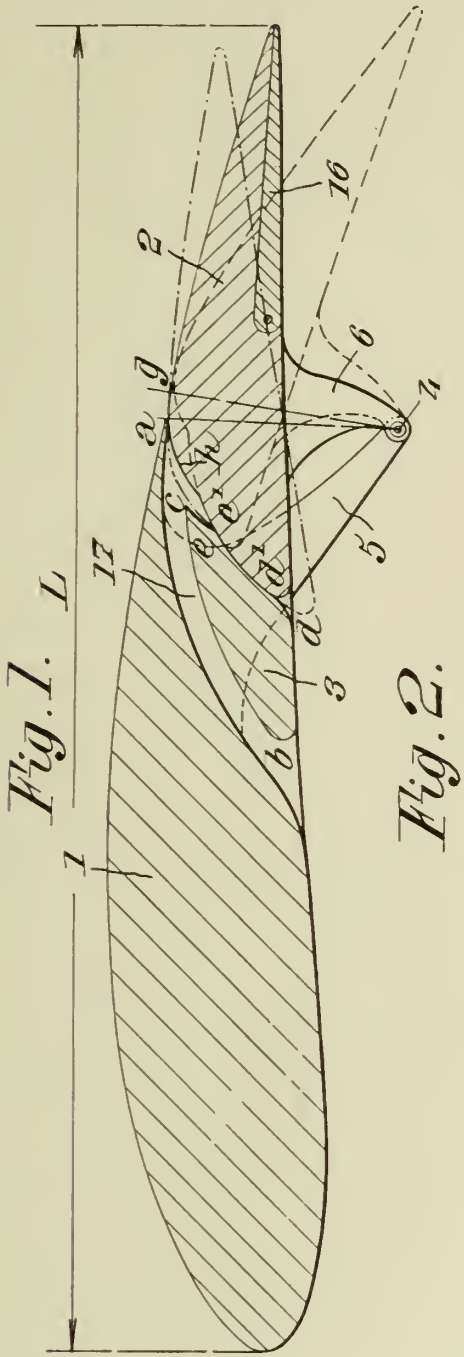

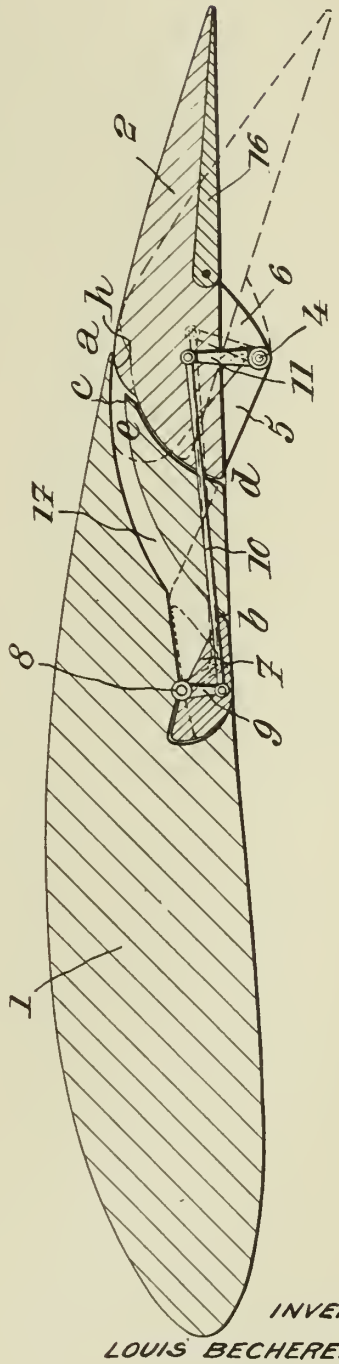

INVENTOR

LOUIS BECHEREAU,

BY Bailey & Parsons

ATTORNEYS

PUBLISHED
MAY 25, 1943.
BY A. P. C.

L. BÉCHEREAU
SUPPORTING SURFACES FOR AIRCRAFTS
Filed Dec. 16, 1939

Serial No.
309,655
4 Sheets-Sheet 2

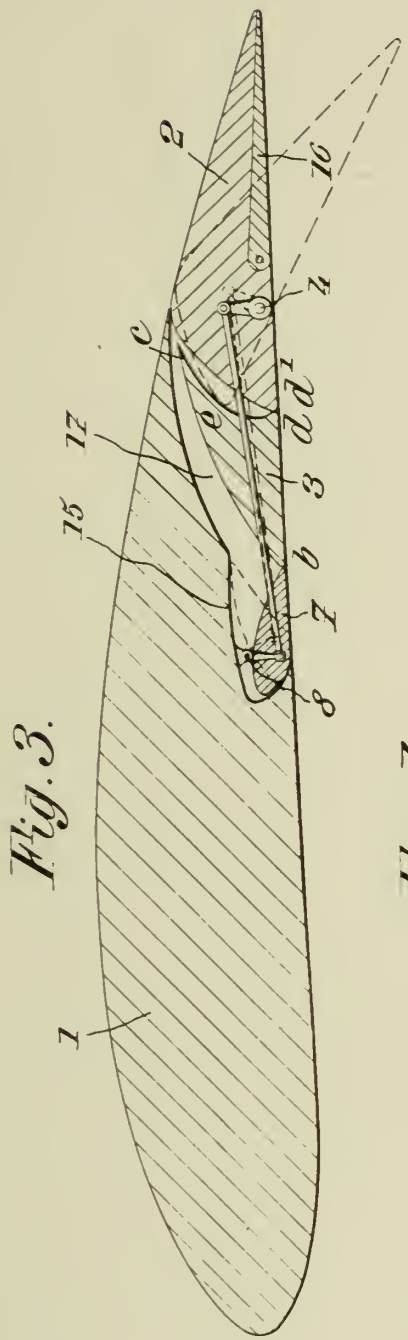

Fig. 3.

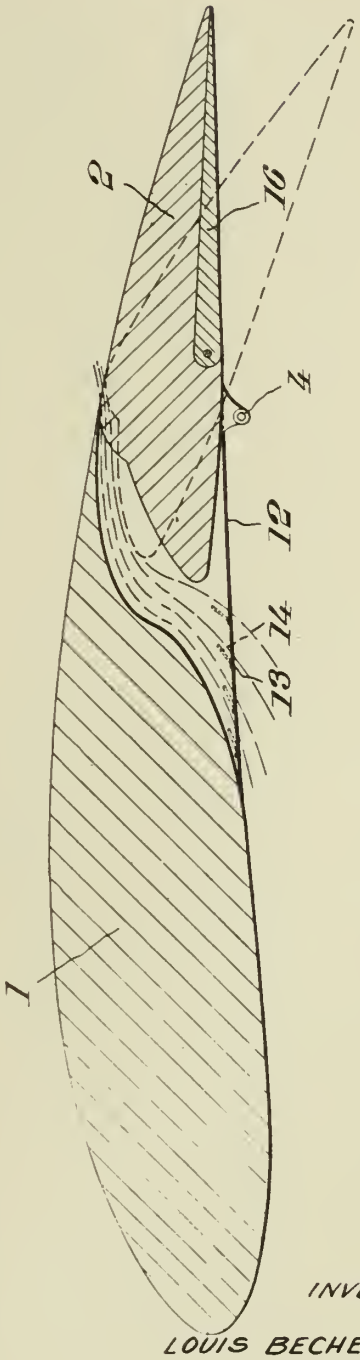

Fig. 4.

INVENTOR
LOUIS BECHEREAU,
BY Bailey & Larson
ATTORNEYS

PUBLISHED
MAY 25, 1943.
BY A. P. C.

L. BÉCHEREAU
SUPPORTING SURFACES FOR AIRCRAFTS
Filed Dec. 16, 1939

Serial No.
309,655
4 Sheets-Sheet 3

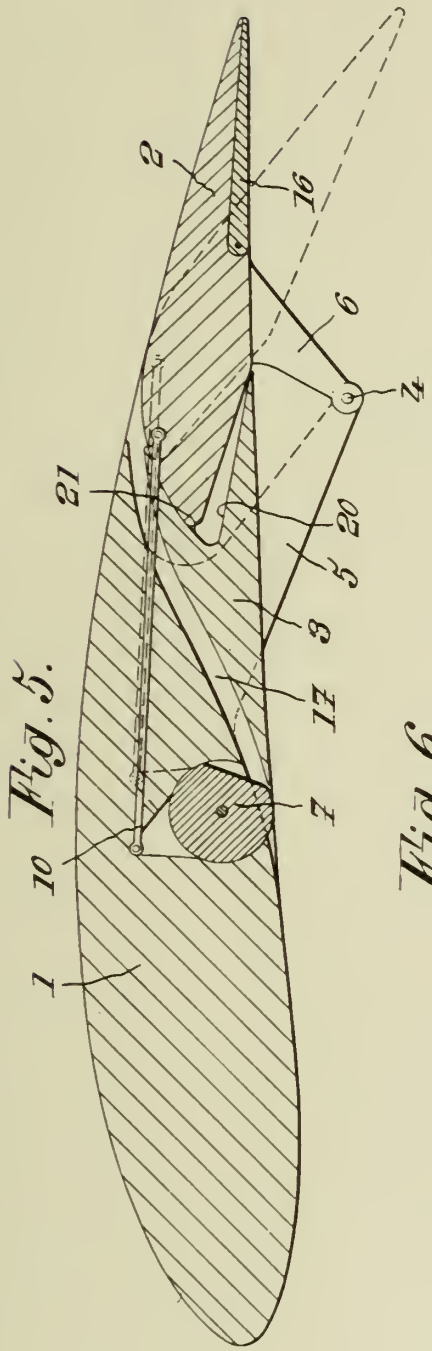

Fig. 5.

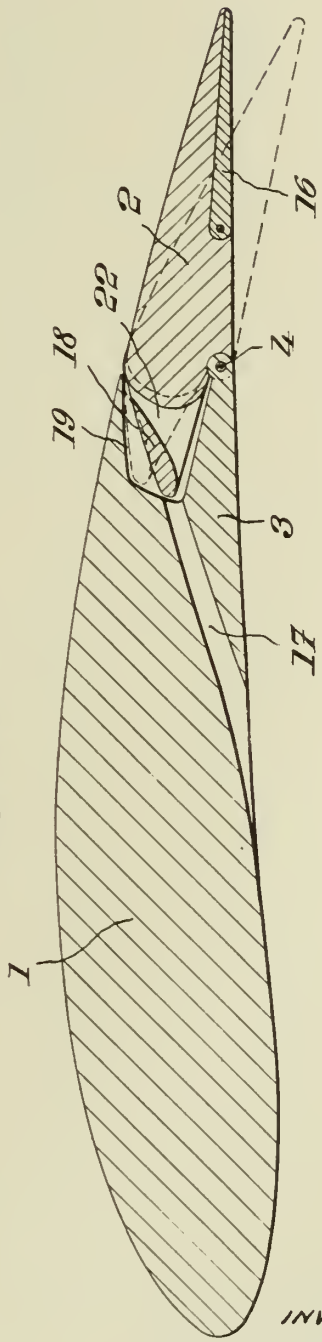

Fig. 6.

INVENTOR
LOUIS BECHEREAU,

BY Bailey & Larson
ATTORNEYS

PUBLISHED
MAY 25, 1943.
BY A. P. C.

L. BÉCHEREAU
SUPPORTING SURFACES FOR AIRCRAFTS
Filed Dec. 16, 1939

Serial No.
309,655
4 Sheets-Sheet 4

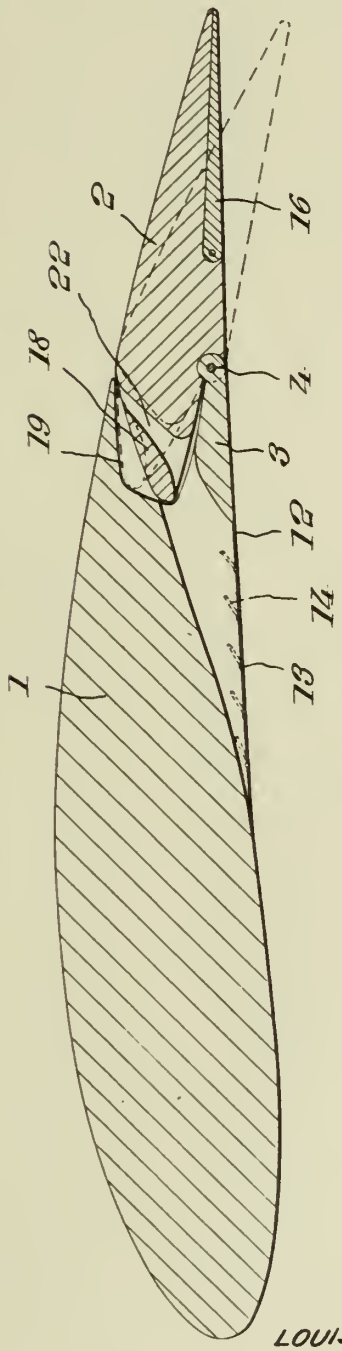

Fig. 7.

INVENTOR
LOUIS BECHEREAU,

BY Bailey & Larson
ATTORNEYS

Published May 25, 1943

Serial No. 310,261

ALIEN PROPERTY CUSTODIAN

PROCESS FOR THE SEPARATION OF YEAST FROM YEAST SUSPENSIONS

Max Petrus Jozef Maria Jansen, Amsterdam, Netherlands; vested in the Alien Property Custodian

Application filed December 20, 1939

In the commercial manufacture of compressed yeast for baking, the separation of the yeast has largely been accomplished in filter presses. Such practice has been long recognized to be attended with many drawbacks, and various other methods have been tried.

The use of a rotating vacuum filter was tried with some degree of success, but such a method gives a fluid yeast mass containing only 25 to 26% of dry matter. Such product is too moist, does not keep well, and cannot be shipped for long distances, particularly in warm climates.

Processes employing centrifugal strainers or centrifugal filters, or in other cases centrifugal clarifiers or overflow centrifuges, as heretofore tried, have not given very satisfactory results.

In accordance with the present invention it has been found readily possible to get a compressed bakers' yeast containing 28 to 30% of dry matter by employing a centrifugal filter having a filter cloth, and having a suitable inlet for the aqueous suspension of the yeast, the suspension flowing in much more rapidly than the water content of the same can filter through the filter cloth, allowing this to continue until the rotating bowl of the centrifugal filter becomes filled with liquid. Then the inflow of the suspension is continued, whereby the centrifugal filter acts as a centrifugal clarifier or overflow centrifuge allowing clear liquid, containing no considerable amount of yeast, to overflow an internal ring dam at one end of the centrifugal filter. This inflow of the suspension of yeast is so continued until the bowl is nearly filled with soild yeast. Then suddenly, the overflowing liquid passing the ring dam becomes very turbid, about like the suspension of yeast being run in, and then the inflow of suspension is at once stopped. The operation of the centrifugal is then continued at normal speed until the small amount of aqueous liquid in the central part of the centrifugal filter passes out through the mass of yeast therein, and through the filter cloth.

In this manner, there is left in the centrifugal filter, an annular (hollow cylindrical) cake of perfectly homogenous clean yeast mass, of any desired content of dry material from 28% up to 30%, depending on the speed of rotation and the length of time that the centrifugal filter is left running after shutting off the inflow of suspension of yeast.

When this condition has been secured, the yeast (or most of it) can be removed from the centrifugal (while the latter is left running), by a peeling knife or peeling chisel, or other known device for removing a filter-cake from a rotating centrifugal.

After the emptying of the centrifugal filter, while preferably leaving a thin layer only of the yeast on the filter cloth (so as not to disturb the latter) the operations are repeated, opening the suspension inlet, allowing to fill with solid yeast until the overflowing effluent again suddenly becomes turbid, shutting off the inflow, spinning to remove the small amount of aqueous liquid, and again removing the cake. It becomes only necesary to shut down the centrifugal for repairs or for putting in a new filter cloth if the one in use gets damaged, e. g. by the peeling knife.

Thus it will be seen that the centrifugal filter acts first as merely a centrifugal filter until the same becomes practically filled with a layer of filter cake overlain by a layer of suspension, then it operates as an overflow centrifugal and also centrifuge filter, up until the overflowing liquid suddenly becomes turbid, whereupon the inflow of suspension is quickly shut off. Then the centrifugal continues to act as a centrifugal filter only, until the desired degree of dryness in the filter cake (compressed yeast) is secured, after which the cake is removed from the centrifugal, all preferably without stopping the rotation of the bowl.

The yeast from the peeling knife is conveyed directly to a packaging machine, e. g., by an inclined chute or by an automatic conveyor, whereby it is unnecessary for the workmen to handle the compressed yeast. This makes for cleanliness, and for good keeping quality of the yeast.

The yeast can be packaged into commercial packages, automatically, the packages being, e. g., a pound, a kilo etc.

The liquid effluent from the centrifugal filter may be run to a tank or sewer, and the liquid effluent from the overflow dam may be run to the tank or sewer until just before time for this effluent to become turbid, when it can be run to a special tank for recovery of that small part of the yeast which will be carried by the turbid effluent.

The propagation and preliminary washing of the yeast can be performed in the usual or any approved manner.

This system of separation of the yeast from the suspension thereof has eben found to be highly efficient, and the equipment therefor is small, taking up much less space than a filter press of equal capacity. It also effects a large saving in labor cost and amount of filter cloth needed. After

a particular installation has been run for a time, and the several time factors have become known, the operation becomes largely automatic. The apparatus can be made of or lined with rust-proof metal, and thorough washing and sterilizing of the equipment is easily accomplished, by hot water, steam and antiseptics.

The kneading and adding water, commonly employed in the filter-press method are usually unnecessary, with the present process, since the yeast leaves the centrifugal in a very homogeneous condition, whereas this is not the case in the filter press method.

One important disadvantage of the centrifugal filter method of separating yeast from suspensions, as heretofore tried, was the fact that the deposition on the first thin layer of yeast on the filter cloth gave a very closely adherent, dense, not readily permeable surface, which permitted the passage of the liquid therethrough only with extreme slowness. Hence the capacity of such centrifugal filtering unit, per hour, was very small. In the present system this objection is overcome since most of the water in the suspension passes out over the ring dam, i. e., in the overflow-centrifuge phase of the process, leaving only a little water which needs to be passed through the filter cloth.

The present process is highly effective although it combines features of the centrifugal filtration process and the overflow centrifuge process, neither of which has itself proven effective as a system for the separation of compressed yeast from yeast suspensions. The fact that kneeding of the separated yeast is not needed, is an important advance in the art.

The apparatus used in the present process is a common sieving centrifuge.

MAX JANSEN.

PUBLISHED

MAY 25, 1943.

BY A. P. C.

M. P. J. M. JANSEN
PROCESS FOR THE SEPARATION OF
YEAST FROM YEASTSUSPENSIONS
Filed Dec. 20, 1939

Serial No.
310,261

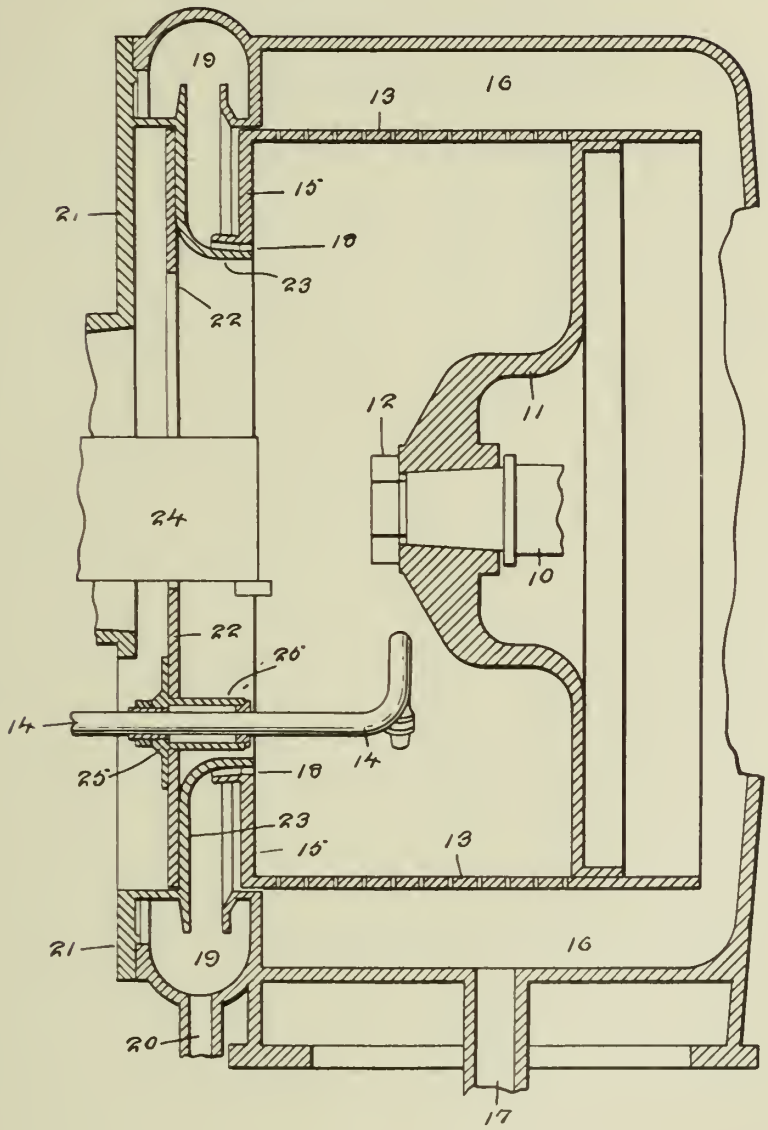

Inventor
M. P. J. M. Jansen

By Foster & Codier
Attorneys.

Published May 25, 1943

Serial No. 310,722

ALIEN PROPERTY CUSTODIAN

ELECTRO-MOTOR DRIVEN VERTICAL CENTRIFUGAL MACHINE

Jan Willem Lubberhuizen, Lobositz, Germany; vested in the Alien Property Custodian

Application filed December 23, 1939

The invention relates to an electro-motor driven vertical centrifugal machine in particular a spinning pot for artificial silk, provided with elastic supporting means, such as rubber shock absorbers, connected to the casing of the machine.

This way of resiliently supporting the motor is generally known. In known constructions, however, the particular requirements to be fulfilled by these supporting elements were not sufficiently taken into account. The invention is based upon the consideration that the motor, upon being started and as long as the number of revolutions has not yet reached the first critical number, should be able to follow the oscillating movements of the spinning pot. The motor should then be able to make an oscillating movement on the shock absorbers which movement at the top is much stronger that at the bottom. Therefore the motor has a tendency to tilt whereafter it is returned by its own weight into the vertical position. When supporting the motor on a plurality of shock absorbers some of them will be slightly lifted and the oppositely located shock absorbers will be slightly compressed. If the motor has surpassed its critical number of revolutions then during the rotation of the spinning pot the axis of gravity remains in position and the motor should then be able to perform a small precession motion at the bottom. Based on this insight the invention consists in this that the shock absorbers each have a portion that is freely slidable over centering pins or in centering holes of the foundation or stationary motor support whereas between the upper side of said pins or holes and the lower side of the motor casing there is a laterally non-clamped or free shock-absorber-length.

The shock absorbers are thus vertically compressible while at the same time the amount of play between the shock absorber portion surrounding the centering pin or inserted into the centering hole of the stationary support enables the motor to be tilted and to fall back in a limited degree. The motor once having reached its normal number of revolutions, the laterally free shock-absorber-length referred to above may be slightly distorted by the shearing stresses produced; in the case of a laterally clamped in shock absorber this would be impossible and also in the case of a shock absorber rigidly attached to the motor by means of a bolt or pin passing therethrough. Thus, according to the invention, a free shock absorber length affording the shock absorbing effect is combined with a shock absorber length for the centering of the motor.

Further features of the invention will be described hereinafter with reference to the accompanying drawings, in which

Fig. 1 is a vertical central section of an electrical driving device according to the invention e. g. of a spinning pot for artificial silk.

Fig. 2 is a section perpendicular to that shown in Fig. 1 of a detail.

Fig. 1, 2 and 3 are vertical sections of three embodiments of shock absorbers for an electromotor-driven vertical centrifugal machine according to the invention.

Fig. 4 is a vertical section of an electrical driving device for a spinning pot illustrating various structural details.

In Fig. 4 a vertical spindle **1**, upon the upper end of which a spinning pot may be mounted, has been inserted into the hollow shaft **2** of a rotor **3** which together with a stator **4** constitutes the electromotor driving the spindle. The spindle is of the type disclosed e. g. in the U. S. patent specification No. 2,089,933, but it may of course be of other type. The spindle is axially slidable but non-rotatable with respect to the hollow rotor shaft by reason of the fact that the lower end of the spindle is provided with a slot **5** which in the position shown in Fig. 1 and 2 receives a transverse pin **6** secured in the lower end of the hollow rotor shaft. The spindle may be removed from the hollow rotor shaft by taking it out axially and upwards.

It is also possible to couple the lower spindle end to the hollow rotor shaft in any other way than shown in Fig. 4. The spindle at its lower end might have laterally projecting ribs received in corresponding vertical longitudinal grooves in the lower wall portion of the hollow rotor shaft so that the spindle may be inserted from above with said ribs into the grooves of said wall portion which to this end will have to be thicker than the wall portion located thereabove.

The cap at its lower edge is provided with an annular bead **11** adapted to receive under tension an annular spring **19** for securing the cap to a lower casing **15**. The spring is of the type shown in dotted lines and is constituted by a resilient wire in the form of a split ring having outwardly projecting ends **20**, **20** adapted to be moved towards one another so as to reduce the diameter of the spring and thereby unlock the cap **14**.

Insertion and removal of the spindle as well as of the motor and bearings is thus very simple.

Screw connections need not be established or unscrewed.

The hollow rotor shaft 2 is supported exclusively underneath the stator 4 in two superposed and spaced bearings 12 and 13. They may both be combined axial-and-radial-thrust-bearings, or one of them may be a bearing of this type and the other one a tubular bearing, the essential point being that they enable the rotor shaft and rotor to be inserted and removed in axial direction. The stator casing 16 is supported upon elastic, e. g. rubber shock-absorbers 22, shown separately in Fig. 3.

In Fig. 1 in the lower side of the stator-casing 16, in a recess defined by a depending collar 21, the upper end of a rubber shock absorber 22 is clamped. This shock absorbed is in its bottom provided with a recess 23 into which projects with some circumferential play a centering pin 24 upon the upper surface of which the rubber shock absorber is supported with the bottom of its recess. The lower end surface 25 of the shock absorber is located at some distance above the foundation or stationary support 26 into which the centering pin 24 is secured. It follows that there is a laterally non-clamped or free shock absorber length *a* between the lower side of the casing 14 and the upper side of the pin 24 and that further the rubber shock absorber will be compressed between said surfaces. The rubber is thus confined between said surfaces and is not subjected to tensile stress.

In Fig. 2 the rubber shock absorber 22 is clamped in the stator casing 16 by means of a relatively thin portion 27 having at its upper end a collar or thickened head 28. For the rest this embodiment is equivalent to that according to Fig. 1.

In Fig. 3 the rubber shock absorber 22 is provided at its upper end with a collarless relatively thin portion 27 clamped in the casing 14. At its lower end the shock absorber 22 is provided with a relatively thin portion 29 which is inserted with circumferential play into a hole 30 of the stationary support 26. The shock absorber 22 is entirely solid.

In Figs. 1 and 2 the hollow or tubular lower end of the shock absorber 22 and the centering pin 5 have essentially the same centering function as the thin portion 29 of the shock absorber and the hole 30 in the stationary support in Fig. 3. Also in the latter embodiment the rubber of the shock absorber is confined between the stationary support 26 and the lower side of the stator-casing 16 and again there is a laterally non-clamped or free shock-absorber-length, denoted by *b*, between the casing and the stationary support. The lower end of the shock absorber at 31 is entirely free.

JAN WILLEM LUBBERHUIZEN.

PUBLISHED

MAY 25, 1943.

BY A. P. C.

J. W. LUBBERHUIZEN
ELECTRO-MOTOR DRIVEN VERTICAL
CENTRIFUGAL MACHINE
Filed Dec. 23, 1939

Serial No.
310,722

Fig. 1.

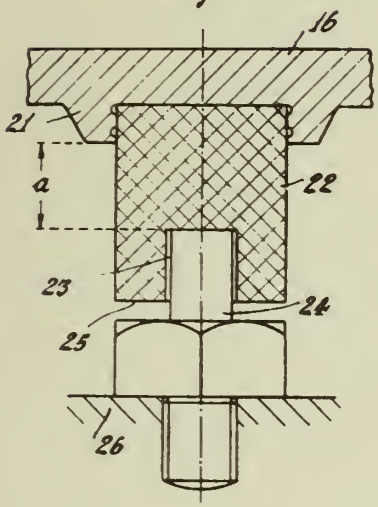

Fig. 2.

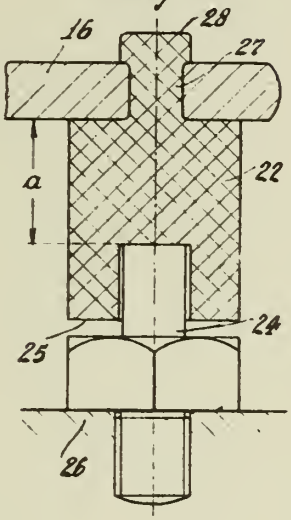

Fig. 3.

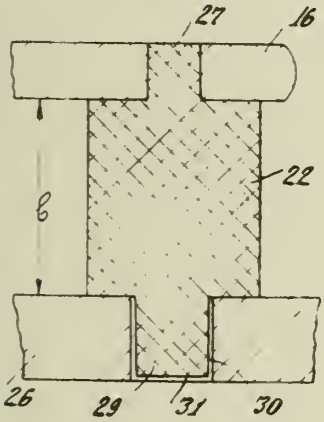

Fig. 4.

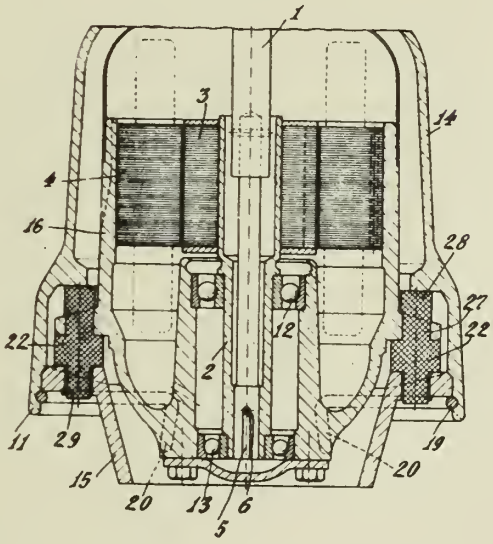

Inventor
Jan. Willem Lubberhuizen
By Williams, Bradbury
McCaleb & Hinkle Atty's.

Published May 25, 1943

Serial No. 310,770

ALIEN PROPERTY CUSTODIAN

CLOSURE DEVICE FOR BOXES AND THE LIKE

Giuseppe Bagnato, Milan, Italy; vested in the Alien Property Custodian

Application filed December 23, 1939

This invention relates to a closing device for boxes and similar containers in which the opening is produced by pressure. The boxes may be of circular or oval form and constituted by a body and a lid independent of each other, each member comprising a bottom and a lateral wall, the lateral wall of the lid fitting on the outer lateral wall of the body. It is well known that these and other boxes, provided with a similar closing device cannot be easily opened or may require the use of an opening device.

According to this invention the lid bottom is provided with inner ribs so formed as to constitute two points of support at a distance from one another equal to about $^3/_5$ of the periphery, about which the lid may oscillate on the edge of the side wall of the body, on which the opposite ends of the ribs rest on two points at a distance apart equal to about $^2/_5$ of the periphery.

The two points of support are advantageously obtained by means of a peripheral rib on the inner bottom of the lid, which is cut away on about $^3/_5$ of the periphery or depressed on said length to form an inclined plane thus permitting tilting of the lid when a pressure is applied on it in the zone where the rib is cut away or depressed. The rib may be obtained, on tin lids, by a peripheral groove extending over about $^3/_5$ of the periphery. When on the contrary the points of support are formed by ribs apart from each other it will be convenient to provide a third rib between them which prevents oscillation of the lid in a direction opposed to the predetermined direction for opening the box.

The wall of the box member (body) adapted to fit into the other member (lid) if of arcuate section, so that the contact between the side walls of the box members is established on a line or region at about mid-height of the walls.

The points of support being above the contact line allow an easy tilting of the lid rearwards.

In order to permit tilting of the lid on the side on which pressure is to be applied, the edge of the lid outer wall is inclined upwards on the side on which the pressure is to be applied or the usual outer annular ridge on the inner wall on a level with the edge of the lateral wall of the lid is cut away at least on a zone equal to the distance (about $^2/_5$ of the periphery) between the two points of support. Said peripheral ridge may be similarly cut away, inclined or fully depressed and it may be of any desired form under the edge of the lid wall.

The outer wall is generally the more resilient and deformable one and tends therefore to flare under a pressure on the line connecting the points of support and to contract on a line perpendicular thereto. This inconvenience is reduced and made harmless in the box according to this invention owing to the fact that the lid is supported when tilted in a region in proximity to the lid bottom instead of on the free edge of its side wall. The lid can thus move from its normal closing position notwithstanding the slight flaring of the side wall.

In order to facilitate the opening although the lid under the pressure tends to contract at the bottom of the wall edge, the lower part of the inner edge of the wall is slightly bevelled, thus preventing increasing of its resistance.

According to a modified form of the invention the increase of the distance between the points of support during opening of the box is prevented by providing a recess or the like in the support region of the points of support.

The box forming the object of this invention constitutes an article of cheap mass production of large use. This box may be manufactured of plastic material or tin (for boot polish, floor wax and chemical products) or part of glass and part of porcelain or part of sheet metal or board or other cellulose product (jars and bottles for medical or toilet creams, food articles and the like) or of any other suitable material.

The annexed drawings show some embodiments of the invention.

Fig. 1 shows a box which may be manufactured of pressed plastic material.

The box is provided with a lid **1** constituted by an innerly cylindrical wall slightly bevelled at the edge bottom and a bottom having a circular rib extending over about $^3/_5$ of the periphery with rounded sides. Between the points **2** where the flat portion ends, the rib **4** is depressed on an inclined plane **3***a*. The lid lies on the edge **7** of the box body by means of said rib **4** having slightly rounded edges. The lid wall has on an arc smaller than 180° of the edge (about $^2/_5$ of a circle) and under the inclined plane **3***a* an incline **3***b* thus forming edges **2***a* leaving a zone **11** of the wall of the box body exposed along said arc smaller than 180°. On pressing the lid **1** on the side of said arc, the edges **2** acting as points of support oscillate on the edge **7** of the body and the lid is brought to an inclined position on the body, as shown in Fig. 2, in which it may be easily removed. The box body is constituted by a bottom and a lateral wall having an outer convex surface **6** with its maximum circle (forming the contact line with the lid wall) at about

mid-height. The peripheral bead **9** is at a suitable distance from the lid to allow inclination of the latter.

The inclined plane **3***a* is slighted depressed in proximity to the point of support.

According to fig. 2, the box has no peripheral bead facing the lower edge of the slide wall **5** of the lid, so that it is not necessary to cut away the lid on an inclined plane, tilting being still possible. According to fig. 2, the lower edge of the side wall of the lid **5** is slightly bevelled inside in order to facilitate the opening even if the lid wall is slightly flared.

Fig. 3 shows a box and lid both of pressed sheet metal. The body has no peripheral bead and therefore the lower edge of the lid wall is continuous. The rib **4** with its inclined plane **3***a* is pressed from the material of the lid. The side wall of the lid may be curved outside towards its free edge, which may be upturned to increase the bending resistance. The edge of the side wall **6** of the body is reinforced by means of a bead **7**.

Obviously the box body shown in figs 2 and 3 may be provided with a peripheral bead provided the latter is at a suitable distance from the lid to permit tilting thereof.

According to fig. 4 the curved side wall of pressed sheet metal of the box body is attached thereto by folding at **12** at the end of a radial plane forming a peripheral bead. In this case, as in fig. 3, the upper edge of the wall **6** is reinforced by a bead **7** and the rib **4** on the lid with its inclined plane **3***a* is obtained by pressing. Moreover the wall **5** of the lid is curved as described with reference to fig. 3 corresponding to the bevel shown in fig. 2. Owing to the radial plane 9, the lower edge of the lateral wall of the lid has an inclined plane **3***b*.

Fig. 5 shows a construction in which the ribs forming the points of support **2** and inclined plane **3***a* form part of the body while the lid **1** is of cylindrical form with a flat bottom. There are actually three ribs, two of which form the points of support **2** at a distance of about ⅔ of the periphery, while the third rib, which may be seen on the left of fig. 5, serves to support the lid in the closing position.

The lower edge of the continuous lid wall being in one plane, the annular bead **9** of the body has an inclined plane **3***c* for permitting tilting of the lid on the points of support **2** and the depression of the side wall of the lid in the undercut zone **11**.

Fig. 6 is an inner view of a lid of the type shown in figs. 1 and 2 and shows the peripheral rib **4** extending over about ⅗ of the periphery and the inclined plane **3***a* beginning at the ends of the rib **4** thus forming the points of support **2**.

A second lid **3** may be applied to all boxes or containers. In the drawing above each figure is shown a small lid of a form suitable for the box in each figure. Such lids may be manufactured, according to requirements, of tin, cardboard or other suitable material and made more or less convex at the centre to facilitate seizing and support the pressure at the centre form the inner bottom of the lid, if necessary by means of a boss **8** of the lids of plastic material, this pressure being produced throughout the periphery, although the second lid is already pressed on about ⅗ by the peripheral rib of the lid.

According to requirements, in the peripheral groove of the second lid a rubber or mastic ring may be arranged as customary in folded boxes. The rings may be of crude plastic rubber or semi-resilient or resilient rubber partially or completely vulcanised. For the closure of boxes or containers adapted to contain substances which may deteriorate the rubber, mastics constituted by polimerised vinyl compounds of casein or other suitable substances may be used. When of cardboard, the containers may be coated or impregnated with paraffine or other suitable substances.

The lid according fig. 5 is so formed as to facilitate seizing by means of side wings **14**.

Obviously the form of the box body and lid below or above the zone of the side wall serving for the opening and closure of the box may be of any suitable form.

GIUSEPPE BAGNATO.

PUBLISHED

MAY 25, 1943.

BY A. P. C.

G. BAGNATO

CLOSURE DEVICE FOR BOXES AND THE LIKE

Filed Dec. 23, 1939

Serial No.
310,770

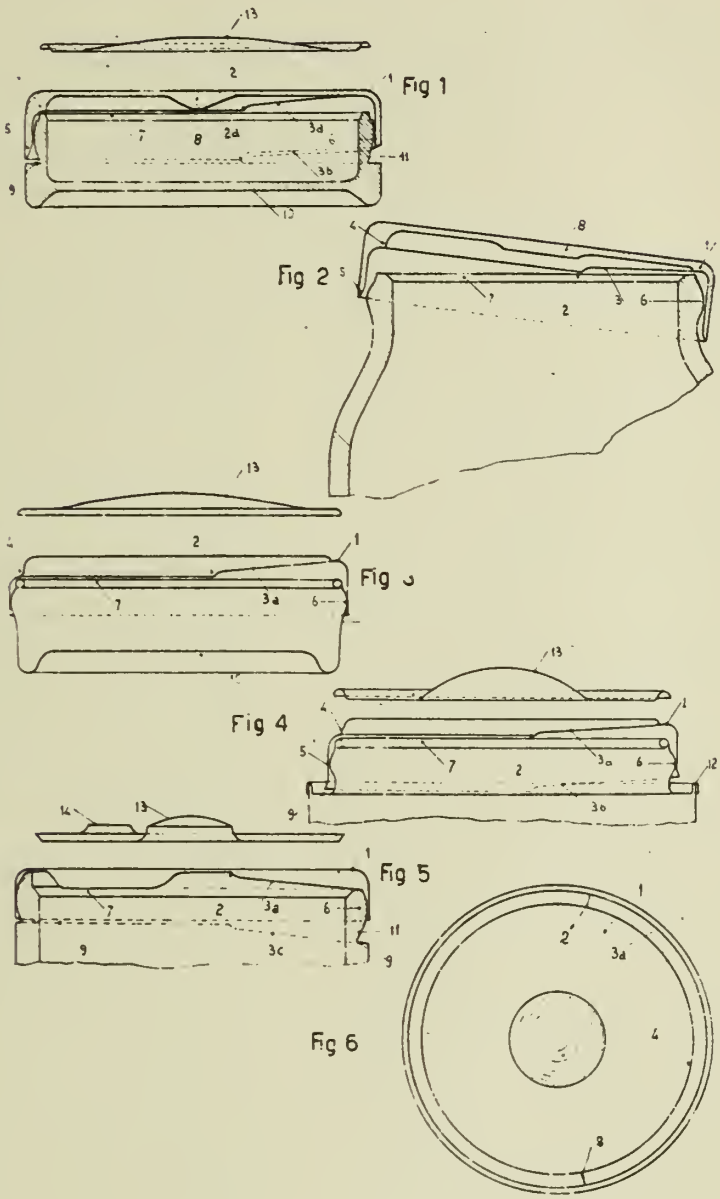

Published May 25, 1943

Serial No. 311,682

ALIEN PROPERTY CUSTODIAN

METHOD OF SEPARATING SLIMES CONTAINING FIBROUS MATERIALS

August Götte, Frankfurt/Main, Germany; vested in the Alien Property Custodian

No Drawing. Application filed December 29, 1939

The present invention relates to the separation of fibrous materials from slimes or waste liquors containing the same. More particularly the invention relates to the separation of cellulosic fibrous materials from slimes or waste liquors obtained in the preparation of paper, pasteboard and the like.

Waste liquors of the type mentioned above which contain fibrous materials must be freed of such materials in order to avoid losses of valuable fibers and also to prevent undue contamination of water supply systems into which such waste liquors may be discharged. Separation of, for example, cellulosic fibrous materials from waste liquors has been tried by flotation methods involving the use of thickeners, collectors or filters. In such methods wetting agents, such as Turkey red oil, and flocculating agents, such as alum, have been used for the purpose of improving flotation of the fibrous materials. However, the use of such agents results in only a slow and incomplete flotation of the flocculated fibers, especially when the fibers to be separated include fibrous materials derived from processes for the recovery of old paper and such prior methods are not improved by the use of special oils and similar products which have been proposed heretofore.

It is an object of the present invention to provide an improved method of separating fibrous materials from slimes, waste liquors and the like containing the same, whereby flotation of the fibrous materials is effected rapidly and completely. Other objects of the invention will be apparent from the ensuing description thereof.

The above objects may be accomplished in accordance with the present invention by treating the slime or waste liquor containing fibrous materials with a flocculating agent, i. e an agent such as alum which is capable of effecting the flocculation of the fibers, while having present in the liquor an oxygen-evolving compound. It has been discovered that the presence of an oxygen-evolving compound together with the flocculating agent and, if desired, a wetting agent effects a rapid and complete flotation of the fibrous material. Hydrogen peroxide is a very effective oxygen-evolving agent for the present purpose; however, other oxygen-evolving agents such as ozone, sodium peroxide, sodium perborate, persulfuric acid and salts thereof, etc., may be used with good results. When an oxygen-evolving compound such as those enumerated is used in conjunction with the known flocculating agents, it has been discovered that even the more inert or "dead" fibrous materials may be floated rapidly so as to permit a quantitative recovery of the fibrous material. This is especially true if the treatment of such inert fibers involves also the use of wetting agents such as Turkey red oil. Various of the known flocculating agents may be used in accordance with the present method. However, the use of alum has been found to be especially well suited for use in conjunction with an oxygen-evolving compound, e. g. hydrogen peroxide. It may be noted that in some instances the effectiveness of the present process may be increased if there be present in the waste liquor during the treatment an agent which facilitates froth formation.

While the present method may be practiced for effecting the separation of fibrous materials from waste liquors of all types, especially satisfactory results are obtained if the liquor is neutral or alkaline during the treatment. Accordingly, in the preferred modification of the invention the method is applied to liquors which have been rendered alkaline in reaction, i. e. liquors having an alkalinity corresponding to a pH value above 7. It has been discovered that when using an alkaline medium small, thick flakes of separated fibrous materials are obtained and the type of flakes may be governed to a considerable extent by regulating the alkalinity in accordance with the type of flakes desired.

Optimum separation and flotation of the fibrous material results when the waste liquor, to which has been added the treating agents specified above, is subjected to reduced pressures. A practical manner for carrying out the present method involves first adjusting the pH of the liquor to be treated to a value corresponding to 7 or higher by the addition of a suitable alkaline material, such as sodium hydroxide, followed by the addition of a flocculating agent such as alum and then a wetting agent such as Turkey red oil. Hydrogen peroxide or some other suitable oxygen-evolving compound is finally added and the liquor subjected to reduced pressures. When operating in this manner there is obtained upon the upper surface of the liquor being treated thickened flakes of separated fibrous material which may be removed by known methods. It should be mentioned that the amount of wetting agents such as Turkey red oil employed should be adjusted so that the gas bubbles formed do not destroy the flakes of fibrous material formed. Depending upon whether the liquor being treated contains unusually large amounts of substances which accelerate the rate of evolution of oxygen from the oxygen-

evolving compound, it may or may not be advisable to have present in the liquor a stabilizer for the oxygen-evolving compound. Any of the well-known stabilizers for such compounds may be employed if circumstances warrant the use of such a stabilizer.

The present process is especially well suited for use in the flotation of paper which has been covered with thin metal foil. By means of the present process, involving the use of hydrogen peroxide or a similar oxygen-evolving compound, the paper or fibrous portion of such metal foil-coated product is quickly separated by flotation whereas the metal is precipitated. This facilitates the economical separation of the paper or fibrous material from the metal foil.

AUGUST GÖTTE.

Published May 25, 1943

Serial No. 310,799

ALIEN PROPERTY CUSTODIAN

REAR AXLE FOR MOTOR VEHICLES

Fritz Fiedler, Munich, Germany; vested in the Alien Property Custodian

Application filed December 23, 1939

The invention relates to means connecting rigid drive axles of motor vehicles with the frame, with the object to effect the transmission of the longitudinal thrust forces in such a manner, that this is done by the insertion of plastic yielding supports whereby on the one hand the transmission of the noises produced by the rear axle to the frame, which, as is known, are very disagreeably felt within the passenger room owing to the vibrations transmitted to the vehicle body and on the other hand a transmission of shocks to the frame are reliably avoided.

It is known with rigid rear axles of motor vehicles suspended by means of levers and swinging links on two torsion bar springs, to connect the drive axle with the frame in such a manner that two thrust rods engage on the upper side at the middle of the axle with a ball joint, these thrust rods being so secured to the rear transverse member of the frame in spaced relation and rockable in the longitudinal direction, that in this manner is formed a triangular connection between the frame and the axle. This connection serves as well for the transmission of the longitudinal thrust produced by the drive torque and the brake torque as for the transmission of the transverse thrust produced by the centrifugal force. Further it is known with rigid rear axles of motor vehicles suspended by coil springs to take up the longitudinal thrust forces by a rigid center thrust tube connected with the rear axle casing and to transmit the transverse thrust forces to the axle by a prop arranged transversely to the direction of travel and connected at the one hand with the frame and on the other with the axle. Besides that it has already been proposed to connect the thrust transmitting elements which are intended to serve for connecting the chassis frame with the axle by the insertion of a yielding material.

In contrast to the foregoing it is the object of the invention to conect rigid drive axles of motor vehicles with the frame in such a manner, that the transmission of the longitudinal thrust forces may be effected by means of plastic yielding supports. This may be done on the one hand by a clear separation in transmitting the longitudinal thrust forces caused by the brake torque and the drive torque and the transverse thrust force originated by the centrifugal force. For this purpose a prop for supporting the centrifugal forces arranged transversely to the direction of travel and connected on the one hand with the frame and on the other with the drive axle is provided which serves to transmit the transverse thrust force to the axle. The further connection of the rear axle with the chassis frame is obtained by means of a center thrust tube which is on the one hand rigidly connected with the rear axle casing and on the other hand hinged on the frame, whereat the chassis frame is suspended by torsion bar sprung levers engaging with the frame and swinging transversely to the direction of travel, to which links swinging transversely to the direction of travel are mounted, said links extending vertically to the longitudinal direction of the vehicle and connecting the axle with these levers and thus indirectly with the chassis.

It is therefore the object of the invention in case a so-called centrifugal force prop for taking up the transverse forces is mounted to make use of the above described mode of suspension of the chassis frame on the drive axle and the utilization of a center thrust tube rigidly connected to the drive axle and hingedly connected to the chassis frame. The combination of these different characteristics known per se for the combined arrangement according to the invention involves considerable and essential advantages compared with the arrangements already known.

By the axle suspension according to the invention it is possible to transmit part of the longitudinal thrust forces produced by the brake torque and the drive torque from the vehicle body through the levers of the spring system to the rear axle. A complete transmission of the occurring longitudinal thrust forces through this axle suspension however would not be convenient in so far as this would require a strengthening of the force transmitting members such as of the joints and of the levers and thus necessarily an increase of the unsprung masses. By the combined arrangement according to the invention whereat a center thrust tube is provided, it is possible to make a division in the transmission of the total longitudinal thrust force, so that the single transmitting members, such as the two levers and the center thrust tube still have to transmit only a fraction of the total longitudinal thrust force. In this manner it is now possible to provide for elastic, i. e. particularly plastic connecting points of these force transmitting members with the frame or with the axle and to so avoid effectively a transmission of the axle and drive noises otherwise usually from the chassis frame to the vehicle body, which is felt e. g. as a disagreeable sounding. According to the invention a yielding support e. g. a rubber a cushion is used for the transmission of the support reactions of the cen-

ter thrust tube to the chassis and a yielding journal support for the connection of the two levers of each of the two link pairs of the axle suspension. Besides that the center thrust tube is made as long as possible, so that the bearing pressure is still further reduced and thus a safe transmission of force is assured.

By the arrangement of a centrifugal force prop for taking up the transverse forces occurring when negotiating curves, as provided by the combined arrangement according to the invention furthermore it is avoided that any transverse thrust forces are transmitted through the connection of the center thrust tube with the chassis frame. This circumstance makes it likewise possible to provide for a plastic support of the center thrust tube at the frame as well as for the elastic connection of the two levers of each of the two link pairs of the axle suspension as in this manner these constructional members become fully free of stressing by transverse forces. By the axle suspension used in the combined arrangement according to the invention whereat part of the longitudinal thrust forces can be transmitted by this suspension it is only possible to provide a center thrust tube for the yieldable transmission of the longitudinal thrust forces for being an advantageous force transmitting element between chassis frame and drive axle, corresponding to all service conditions, as by the possibility of transmitting forces through the axle suspension, i. e. in a relatively large lateral distance from the center thrust tube, maximum stability in the transmission of longitudinal thrust forces is obtained, a fact, which is realised to this extent with other arrangements only by providing a triangular support of the frame against the drive axle.

As consequently at the different force transmitting points exists an uniform force action, which is effective as pressure stress at the journal supports of the axle suspension and with a correponding construction of the support for the center thrust tube likewise at the chassis frame, the yielding intermediate material such as rubber is loaded only in the direction of its maximum resistance, which of course means besides maximum life above all the possibility of using a special plastic material for the force transmitting members.

A further advantage of the provision of a plastic yielding material at the supporting point for the center thrust tube rendered possible by the combined arrangement according to the invention on the one hand and the connection of the two levers on the other hand resides in a certain compensation of the shocks caused when starting, forced accelerating and braking partly very disagreeably felt in the passenger room, which is of particular advantage with regard to the diminished wear of these force transmitting members.

By the combined arrangement as proposed by the invention the force transmission is so clearly divided, that each force transmitting point may be made yielding i. e. particularly plastic, even the force transmitting connecting points of the axle at the frame of the vehicle body without the existence of drawbacks, which otherwise occur with continuous stressing of rubber as force transmitting member.

In the combined arrangement according to the invention preferably also the centrifugal force prop arranged transversely to the direction of travel is yieldingly connected as well with the frame as with the drive axle.

One form of embodiment of this invention is shown in the accompanying drawing.

Fig. 1 is a side elevation and

Fig. 2 is a top view of the connection of a rigid drive axle of motor vehicles with the frame according to the invention.

In the arrangement according to the invention the centrifugal forces are transmitted by a prop 1 for supporting the centrifugal forces arranged transversely to the direction of travel and connected on the one hand through the bearing 3 with the rigid axle 4 and on the other hand through the bearing 2 with the frame 10. The transmission of the longitudinal thrust forces is effected at three points viz. through the center thrust tube (5), which on the one hand is rigidly connected with the rear axle (4) and on the other hand hingedly connected with the frame (10) and through the levers 6 and 7, serving for the suspension of the chassis frame 10 at the drive axle 4 and swinging transversely to the direction of travel. Said levers 6 and 7 are supported by torsion bar springs 13 and 14 in the bearings 8 and 9 and engaged with the links 15 swinging transversely to the direction of travel and arranged vertically to the longitudinal direction of the vehicle, connecting the axle 4 with the levers 6 and 7. By the distribution in three branches of the longitudinal thrust force obtained by the arrangement according to the invention it is possible to use as support a plastic rubber cushion 12 for the transmission of the support reactions of the center thrust tube 5 to the chassis frame 10, as to provide the connection of the two levers of each of the two link pairs of the axle suspension through a yielding journal support 11. The centrifugal force prop 1 is likewise yieldingly connected as well with the frame as with the axle.

FRITZ FIEDLER.

PUBLISHED
MAY 25, 1943.
BY A. P. C.

F. FIEDLER
REAR AXLE FOR MOTOR VEHICLES
Filed Dec. 23, 1939

Serial No.
310,799

Fig. 1

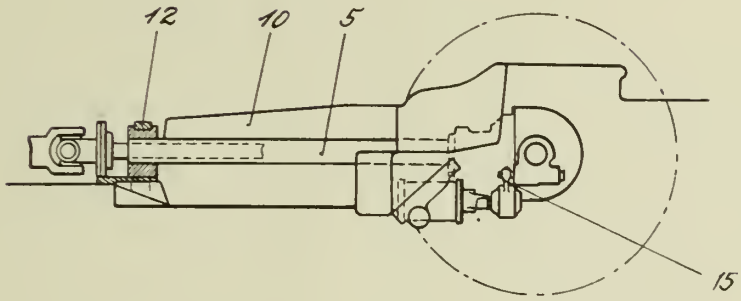

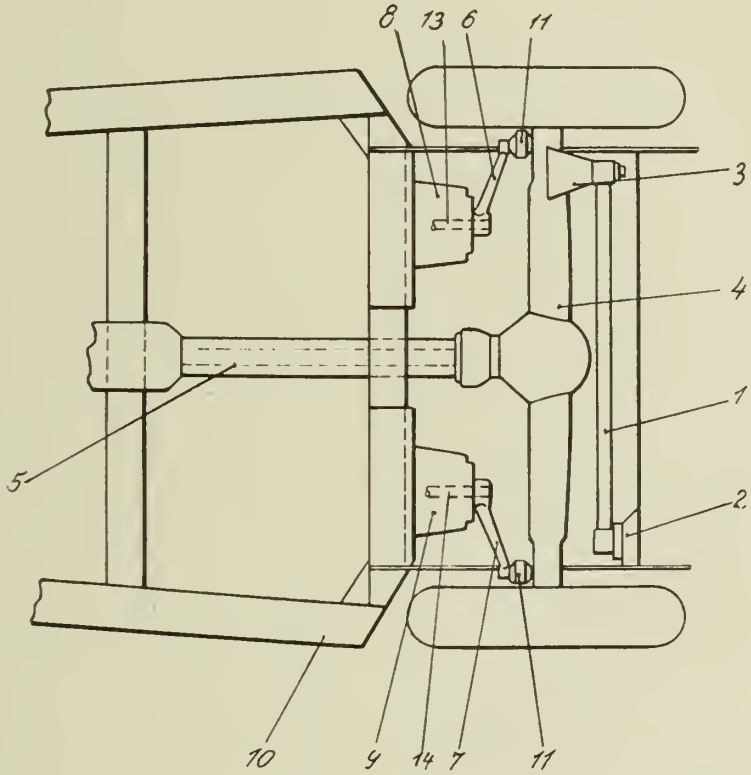

Fig. 2

INVENTOR:
FRITZ FIEDLER
by A. A. Wicke
Clonnell & Rumm
ATTORNEYS

Published May 25, 1943

Serial No. 312,691

ALIEN PROPERTY CUSTODIAN

AUTOMATIC STEERING DEVICE FOR AIRCRAFT

Adam Kronenberger, Berlin, Germany; vested in the Alien Property Custodian

Application filed January 6, 1940

With the greater aerodynamic improvement of airplanes, even greater demands are made on automatic steering devices for aircraft because the damping of the airplane itself is naturally reduced more and more. Furthermore, the increased speed of flight requires a better threshold sensitivity of the automatic steering device in order to obtain the same accuracy of steering as before.

With the types of aircraft generally in use until recently, having a high fuselage resistance, it was sufficient for the correction of the flying attitude, to obtain a steering impulse depending upon said attitude in connection with a repeat-back device. This steering impulse in future will be referred to as "an attitude value." By means of the repeat-back the rudder angle is made proportional to the amplitude of deviation from the normal flying attitude.

The use of a repeat-back device has the disadvantage that with a given deviation, the same rudder angle is always produced regardless of speed, while with high flying speeds small rudder angles would be desirable, and with low flying speeds larger rudder angles, in order to bring the airplane back into its normal position.

This particular fact becomes more and more important because of the much higher speed range of modern airplanes. While until recently the range between landing speed and cruising speed was about 100 to 200 km. per hour, corresponding to a dynamic pressure range of 1:4, the present range is 100 to 500 km. per hour and more, corresponding to a dynamic pressure range of 1:25.

The repeat-back also has the further disadvantage that the steering impulses caused by disturbing the flying attitude are weakened by same, so that the steering effect is not sufficient in case of disturbances caused by bumpy weather, while otherwise the steering impulses cannot be made too large in order to prevent hunting of the steering apparatus during straight flight.

In order to satisfy the increased demands caused by modern airplanes with respect to the damping of disturbances, the automatic steering device has to be so designed that it can deliver an additional amount of damping of sufficient magnitude. In order to quickly correct disturbances without hunting, it is necessary to counteract the rudder motion at the correct time, and it is well known, according to physical laws, that the damping momentum caused by counteraction of the rudder must be proportional generally to the speed or rate of change of amplitude of the disturbance. This means that the counteracting rudder motion produced by the instrument must be produced with sufficient lead as to time. For instance, if the airplane is thrown off its course by means of a gust of wind, the rudder should have its largest angle at the same time at which the angular velocity of the airplane due to the disturbance reaches its maximum value. In order to fulfill these demands, the power control switch of the steering device has received, in addition to the attitude value, impulses produced by a gyro responsive to the angular velocity of the airplane. In connection with a repeat-back, as it was used with previous installations for the limitation of the angular motion of the rudder, it is retarded in its angular velocity and the magnitude of its motion.

The magnitude of the steering impulses is limited by the capacity of the steering device. If this is surpassed, which means that the sensitivity is made too high so that maximum speed of the rudder motor is obtained even with comparatively small disturbances, then with greater disturbances the automatic steering device functions as a limited steering device, which means that in overcoming a disturbance which is only a small percentage of the total disturbance, the rudder already moves with maximum speed so that higher values cannot be obtained.

In order to obtain an automatic steering device which will cover the whole range of disturbances, it is therefore necessary that there be approximate proportionality between the value of the disturbance and the capacity of the rudder motor system. On the other hand, it is necessary to sufficiently strongly hold the airplane to its intended position so that the correction of the flying attitude is obtained with the necessary speed. For instance, in squally weather the airplane should be corrected as much as possible after one gust of wind before the next gust throws it off its course again.

Furthermore, it is necessary in order to obtain correct steering effects, that the several rudders be made to respond with as small a time lag as possible and that rudder amplitudes obtained not only disappear as the airplane returns to its intended position, but that in addition thereto an opposite rudder motion be produced proportional to the angular velocity of the airplane in order to prevent overshooting.

According to the present invention, the above conditions will be correctly handled by the combination of a steering relay independent from the rudder position with a hydraulic device for

the control of the steering elements, in such a way that the steering relay is controlled by means of an attitude value impulse generator and by another impulse generator responsive to angular velocities, for instance, a spring controlled gyro which measures angular velocity of the airplane and, if necessary, also angular accelerations, while the hydraulic device is designed so that it can yield to exterior forces and so that its speed generally is proportional to the sum of the steering impulses.

The device of the present invention obtains a steering effect which practically has no time lag and is independent of the speed of the airplane. The rudder is moved back into its original position under the influence of the opposing forces caused by the relative air speed as soon as the steering impulse produced by a disturbance disappears, without the necessity of obtaining a counteracting steering impulse, which normally is necessary with all self-locking steering devices. To this is added an impulse produced by the angular velocity of the airplane which would cause a counteracting rudder angle if the airplane returns to its original position too fast, so that this effect produces sufficient damping. In order to further increase the damping effect of the automatic steering device, the power valve may also be controlled by an impulse proportional to the angular acceleration. This would cause correct steering impulses just as soon as the disturbance starts.

It is very essential for correct functioning of the automatic steering device that friction and back-lash be prevented. In its simplest form this can be done by the use of members which are stiff in the direction of their effect but yielding normal thereto; like, for instance, spring wires or leaf springs, for the mechanical connection of the power valve with the steering impulse generator. The damping of the gyro, which in turn causes damping of the motion of the airplane, can be made free of friction by using as a damping device for the precession of the gyro spring bellows from which pressure fluid escapes through a small hole. As the precession angles of the gyro are small, the gyro frame is preferably carried by leaf springs instead of the usual ball bearings in order to further reduce friction.

The above described improvements permit obtaining a minimum of friction, thereby considerably improving the efficiency of the whole steering device by decreasing the internal phase shift caused by friction. The simultaneous use of the above described means produces a non-hunting steering device which even in very bumpy weather keeps the airplane in its desired position with great accuracy.

In the drawings, Fig. 1 is a diagrammatic view, partly in perspective and partly in section, of the improved control.

Fig. 2 is a time-magnitude diagram of the several steering impulses.

In Fig. 1 an automatic course steering device for airplanes is shown, in which the steering impulses caused by the azimuth gyro 1 and by the gyro 2, which responds to angular velocity and angular acceleration, control an air-driven jet pipe relay 3, which in turn controls a hydraulic rudder motor system. This consists of a gear pump 4 for pressure oil and the servo motor 7, connected thereto by pipes 5 and 6, as well as the schematically shown valve 8. The two pipes 5 and 6 are attached to the pressure outlets of the oil pump. The oil is sucked through a pipe 9 from the sump 10 into the suction part of the pump, if the pump wheels 11, 12 and 13 are rotated in the direction shown by arrows. The pump is preferably driven by an electric motor connected to the wheel 12, but not shown.

In order to move the valve 8, a differential pressure diaphragm 14 is employed which is connected by means of two pipes 15 and 16 with the jet openings 15′ and 16′, which in turn are closely adjacent and opposite to the jet pipe 3. The valve 8 makes it possible to alternately close the lines 17 and 18 which are fed from the lines 5 and 6. The oil pump 4, the valve 8 and the diaphragm 14 preferably are mounted in a common housing, the lower part 10 of which is designed as an oil sump. If, also, the servo motor 7 is combined with the above named parts, the oil circulation is closed within itself so that oil loss because of leaking connections is impossible.

In the mean position of the valve 8, the oil can flow without resistance through the openings 17′ and 18′ into the sump 10. As soon as the valve 8 is moved away from its mean position, one line is restricted so that either in line 5 or 6 there exists a pressure which now is acting upon the rotary motor 7, causing turning of the rotary piston 19. The rudder 21 is connected to the servo motor by means of a clutch 20.

As shown in the drawing, corresponding opposing chambers of the rudder motor 7 are connected to the pipes 5 and 6. By coupling the rotary motor in the direction of the rudder axis, reacting rudder moments and practically all bearing friction are eliminated. The piston 19 is fitted into its housing with great accuracy so that there are no noticeable pressure losses because of leakage of oil between piston and walls. For the same reason, very small oil pressures will cause appreciable motion of the piston. A further advantage of the rotary motor with respect to the present cylindrical servo motor is found in its space economy.

The amplitude of the rudder 21 is limited by the dynamic pressure of the air against the rudder, whereby an equilibrium of forces between the rudder pressure and the steering pressure of the rudder motor is obtained. The rudder angle, therefore, is substantially proportional to the motion of the valve 8. The valve 8, which is shown schematically in the drawing, preferably is designed as a control pin fitted into the hollow shaft of the gear pump 4, in which this pin will control together with suitable steering channels, the flow of the oil practically without friction or reaction.

Also in the impulse generator all friction has been eliminated as far as possible in order to guarantee the action of the automatic steering device without time lag. The vertical gimbal axis 22 of the azimuth gyro 1 carries a semicircular steering disc 23, which in its mean position partly covers two jet openings 24 and 25, through which pressure air escapes. Directly opposite the jet openings 24 and 25 are two ports 26 and 27 which are connected to the opposite sides of a differential diaphragm 28. The four ports 24, 25, 26 and 27 are mounted in a common housing 29, which is adjustable by means of a crank and worm gear drive in order to enable course setting.

The diaphragm 28 is attached to the gimbal frame 31 of the gyro 2 by means of a spring wire 40, which is stiff in the direction normal to the diaphragm but yielding in a plane parallel thereto, so that no back-lash exists. The gimbal

frame 31 is suspended in the housing by means of leaf springs 32 and 33 and has a slotted projection 34 into which a pin 36 projects, which in turn is mounted on the shaft 35 of the jet pipe 3. In this way the motions of the gimbal frame 31 are transmitted to the jet pipe relay 3 with considerable multiplication. The jet pipe, in order to further reduce friction also, may be suspended by springs.

The gimbal frame 31 carries the gyro bearing frame 37, the motions of which are damped by means of a diaphragm box 38, to which it is connected by means of the member 42 and the spring wire 43. The amount of damping can be adjusted by means of a needle valve 39. The diaphragm box 38 also serves the purpose of restraining the gyro around its horizontal precession axis. However, this restraint is much weaker than the restraint around the vertical precession axis by means of the leaf springs 32 and 33.

The operation of the device is as follows: If the airplane is deviating from its intended course, there is produced, in addition to the attitude value given by the azimuth gyro 1, an angular precession of the restrained gyro 2 caused by the motion of the airplane. The gyro precesses first around its horizontal axis and thereby measures substantially the angular velocity. At the same time it precesses around the vertical axis due to the precession of the gyro around its horizontal axis, and this second precession is substantially proportional to the angular acceleration of the aircraft. As explained before, the gyro is strongly restrained around the vertical axis because the freedom around this axis must be kept very small in order to enable the measuring of the angular acceleration. Considerable multiplication has been provided between the gimbal frame 31 and the jet pipe valve 3 in order to obtain the necessary impulses despite the small angular motions of the gyro around the vertical axis.

Due to its powerful restraint, the gimbal frame 31 practically can be considered as rigidly connected to the airplane. As the aircraft is thrown off its course, the gimbal frame 31 tries to maintain its position in space due to the inertia of the gyro 2, so that it deflects the leaf springs 32 and 33, thereby causing an angular motion of the jet pipe 3. The jet pipe moves toward the rear in front of the port 15′ as the airplane moves clockwise. Therefore, the left-hand part of the diaphragm of the differential box 14 receives pressure so that the valve 8 restricts the opening 17′. Pressure appears now in pipe 5 which is transmitted to the corresponding sides of the rotary piston 19. The piston therefore turns clockwise and causes a rudder motion counteracting the angular motion of the airplane.

Besides the impulse proportional to the angular acceleration, another impulse proportional to the angular velocity is produced simultaneously, which is transmitted to the jet pipe 3 by the precession of the gyro 2 around its horizontal axis. With the disturbance of the airplane assumed to be in clockwise direction, the gyro precesses in such a way that it increases the volume of the damping box 38 provided the gyro rotates in the direction of the arrow 2′. The damping of this precession is obtained by restraining the air which tries to fill the box 38 by means of the needle valve 39, which generally is adjusted to obtain an aperiodic damping of the inherent period of the gyro system. The spring tension caused by deflection of the diaphragm of box 38 balances the precession moment of the gyro. The reacting couple acting upon gyro 2 around the vertical gimbal axis causes a motion of pin 34 towards the front so that the jet pipe again moves in front of port 15′.

Furthermore, the housing 29 containing the ports 24, 25, 26 and 27 has moved, due to the motion of the airplane, with respect to the stabilized steering disc 23. This opens port 26 more than port 25. Port 26 is connected by means of the pipe 26′ with the rear chamber of the box 28, while the front part of the chamber is connected to port 27 through line 27′. The greater supply of pressure air to port 26 therefore causes a motion of the diaphragm towards the front, whereby the gimbal frame 31 is turned on its vertical axis a small amount counter-clockwise. The jet pipe 3, therefore, is moved further towards the port 15′.

The above described actions all are simultaneous. However, the maximum amplitudes of the different steering impulses are out of phase with each other, as shown in Fig. 2. *a* is the angle of the course deviation; *b* is the angular velocity of the airplane and *c* is its angular acceleration; *d* is the rudder angle.

The angular acceleration *c* may be considered during the steering action as an impulse causing phase advance which counteracts the unavoidable delays in the whole steering system, while the angular velocity *b* acts to damp the angular velocity of the airplane. The course deviation, *a*, mainly serves for the gradual correction for the course of the airplane and this impulse, therefore is made smaller than *b* and *c* for the normal frequency of gusts of wind, so that the characteristic of the steering effect approximately has the shape shown in the dot-dash line in Fig. 2. The dash line, showing the approximate shape of the characteristic of the rudder angle, has a phase advance with respect to the deviation angle 8, which in case of insufficient damping of the airplane will quickly eliminate any tendency to hunt.

In a manner similar to that shown for the course steering device, the same arrangement may be used for the control of transverse steering and elevation steering. In place of azimuth gyro 1, a horizon gyro will be used to give attitude values, in addition to impulses for the elevation and impulses depending upon the speed and banking in curves. As the inherent damping of airplanes around the longitudinal and transverse axes is considerably greater than around the vertical axis, it will be sufficient in most cases to provide for the automatic steering of the transverse and elevation rudders a gyro measuring only angular velocities with one degree of freedom in place of a gyro responsive to angular accelerations also.

As a source of energy for the gyros in the present case compressed air seems to be preferable, because the steering impulses are also obtained and transmitted pneumatically. The valve 8 may also be controlled electrically without changing the principle of the invention. It is essential for proper functioning of the whole device to secure as little friction and back-lash as possible for all parts of the instrument.

ADAM KRONENBERGER.

PUBLISHED

MAY 25, 1943.

BY A. P. C.

A. KRONENBERGER

AUTOMATIC STEERING DEVICE FOR AIRCRAFT

Filed Jan. 6, 1940

Serial No. 312,691

2 Sheets-Sheet 1

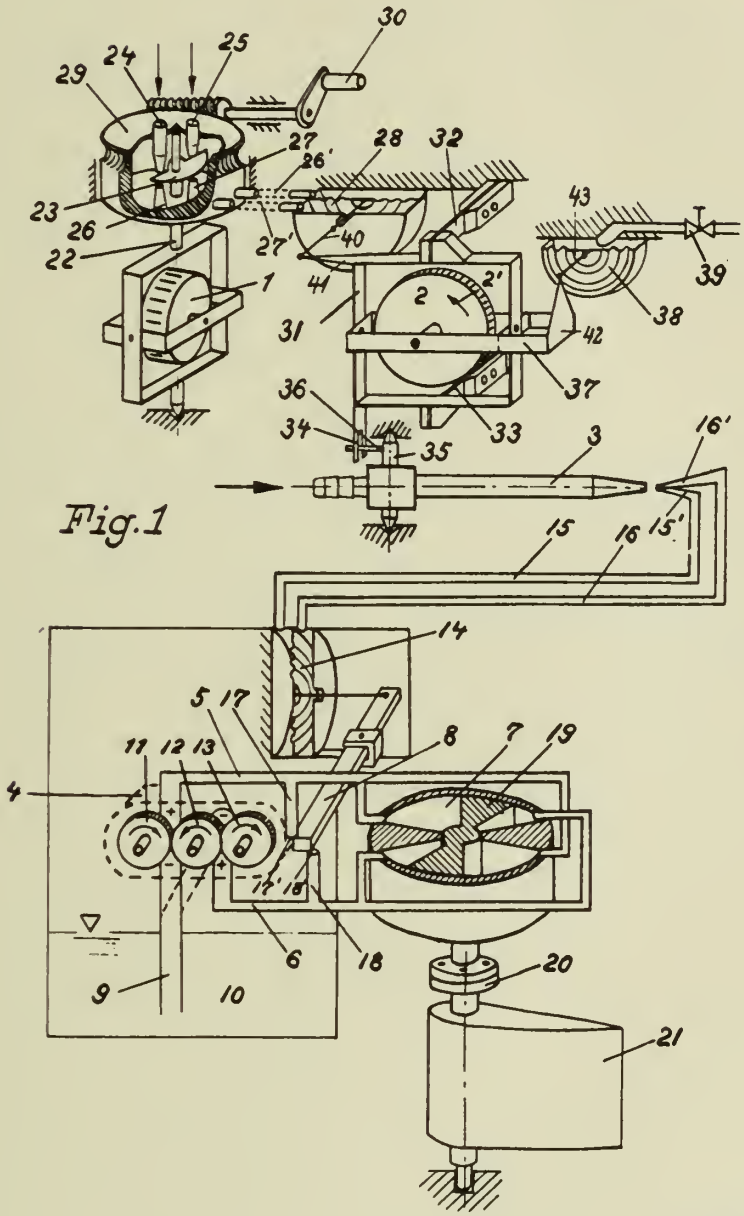

Fig. 1

Inventor:

A. Kronenberger

by Herbert F. Thompson

his Attorney

PUBLISHED
MAY 25, 1943.
BY A. P. C.

A. KRONENBERGER

AUTOMATIC STEERING DEVICE FOR AIRCRAFT

Filed Jan. 6, 1940

Serial No.
312,691

2 Sheets-Sheet 2

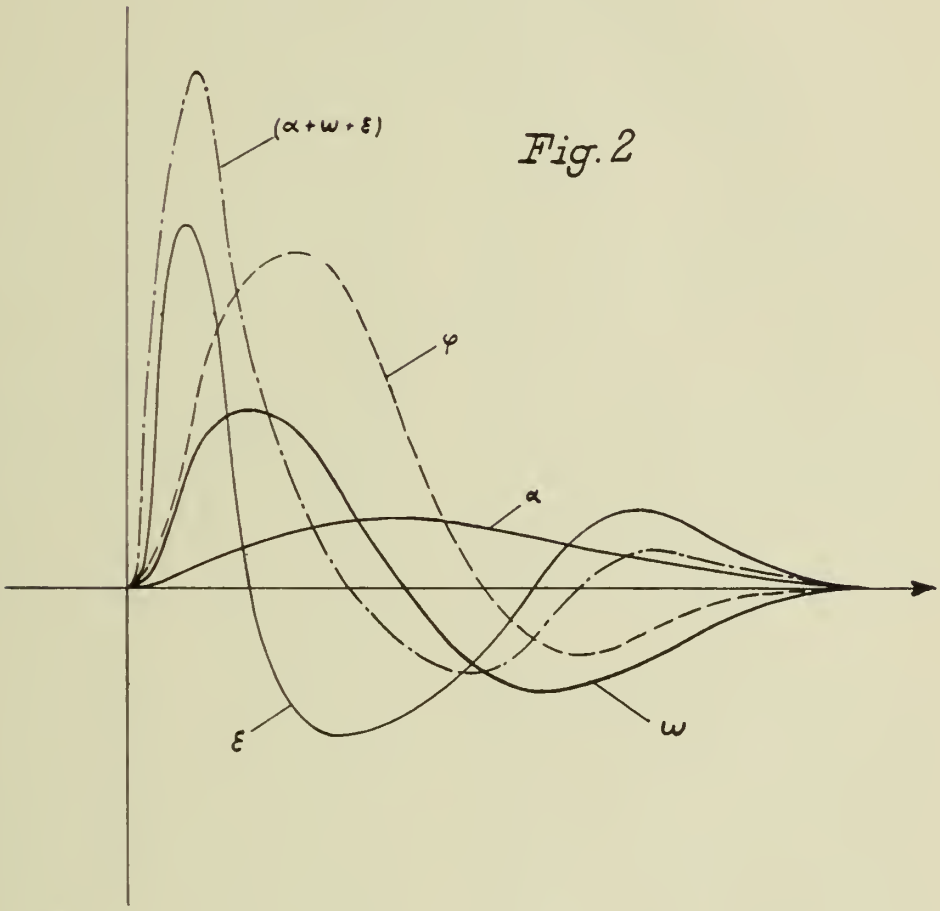

Fig. 2

Inventor:
A. Kronenberger
by Herbert H. Thompson
his Attorney.

Published May 25, 1943

Serial No. 313,017

ALIEN PROPERTY CUSTODIAN

METHOD OF WASHING WHITE AND COLOURED TEXTILE MATERIAL

Anton Volz, Ludwigshafen am Rhein, Germany; vested in the Alien Property Custodian

No Drawing. Application filed January 8, 1940

This invention relates to the treatment of white and coloured linen or textile material to be washed.

It is known that additions of phosphate to soap, fatty alcohol sulfonates or condensation products of fatty acids aid in the washing process. Their efficiency is mainly due to the fact that the lather producing power and yield of these washing mediums is increased and that a higher dispersing and emulsifying effect is obtained. Also, in case of polymerized phosphates, the lime salts are maintained in solution and, in case of other phosphates, the pH-value is buffered. However, it was not hitherto possible to clean white linen in a satisfactory manner by these combinations without the cooperation of alkali, or the conditions had to be selected in a very special manner, respectively.

It has now been found that an excellent washing effect with respect to white and coloured linen can be obtained with washing materials the solubility of which in water is not due to ionogene groups but, for example, to OH-groups, additions of hexametaphosphates or polyphosphate, pyrophosphate, subphosphate or the corresponding thiophosphates at a predetermined pH-value which is preferably 6,1 to 8,0, while in case of the same pH-value, but without the said additions of phosphate the washing materials are practically inefficient. This fact is very striking since an addition of mono-, di- or trisodium phosphate in the same pH-range does not produce a similar increase of the washing power. Similarly, it is not possible by the use of washing mediums which are free from ionogen groups, plus soda, with or without the phosphate admixture according to the invention, to obtain the same good washing power as in the presence of these phosphates and without soda. Therefore a novel effect is clearly produced by the mixture of the said washing materials, comprising amongst others the aryl- or alcyl polyglycol ethers, with the phosphates according to the invention.

The method according to the invention offers the advantage that cotton and cellulose wool as well as artificial silk can be washed with minimum swelling and without detrimental effects to dye-stuffs which are sensible and tend to run away, even in the presence of wool, silk and artificial fibres of albumen raw material, which are sensitive to alkali. This preserving or tender treatment is also of very great importance for the repeated washing of cellulose wool, since the resistance of linen of cellulose wool to washing is thereby increased very much.

Example 1

50 kgs of linen are washed in 200 liters water with admixtures of 2 grams/liter of a polyglycol ether (of the type available under the trade name Igepal) and 1 gram/liter of sodium hexametaphosphate. The temperature is gradually increased from 20° C to 80° C during the washing operation and the linen is then rinsed. The pH-value is 6,3.

Soft or hard water may be used for the washing process. By way of alternative, potassium, sodium and amino salts of the pyrophosphoric acid, of the polyphosphoric acid and of the subphosphoric acid, alone or mixed together, may be used instead of the above mentioned sodium hexametaphosphate. Also, it may be advantageous under certain circumstances to mix polyglycol ether and phosphate beforehand, by purely mechanical or atomizing methods.

Example 2

A bleached cotton frotté containing cellulose wool, which is soiled by gelatine, pearl ink, tea and olein is washed with a liquor containing 2 grams/liter of an alcyl polyglycol ether, such as, for instance, Leonil O, and 1 gram/liter of sodium hexametaphosphate, at a temperature of 20 to 80° C. The pH-value of the liquor amounts to 6,1.

Substituting 1 gram/liter soda instead of sodium hexametaphosphate, a bad cleaning effect is obtained; also an unsatisfactory cleaning is obtained with a liquor comprising 2 grams/liter Leonil O, 1 gram/liter soda+1 gram/liter sodium hexametaphosphate.

According to a further modification of this washing method oxygenous or oxygen-producing substances are admixed to the washing liquor, whereby there is obtained not only a very good washing effect, but also an excellent degree of whiteness. In this case instead of the above mentioned phosphate proper, the additive compounds of the phosphates are advantageously used, such as, the salts of the perpyrophosphoric acid, of the permetaphosphoric acid or the perpolyphosphoric acid, or mixtures of the above mentioned phosphates with oxygenous substances, such as, for example, perborates, percarbonates, persulfates, persilicates and the like are admixed to the non-ionogen washing material.

Hitherto, oxygenous or oxygen-producing me-

diums have been admixed only to washing liquors having a pH-value of 9 or more, for washing and cleaning purposes. Moreover, it was required to add stabilizators to the washing mediums, for attaining a high degree of whiteness. The process according to the present invention, however, renders it possible to use oxygenous mediums also in washing liquors having a pH-value of less than 8, and renders the admixture of stabilizators unnecessary.

The washing mediums to be used in the novel washing process according to the invention may be produced in this manner that the components are intimately mixed together and put on the market in the form of a paste. According to a preferred form of the invention, however, the components are converted into a powderous product, by atomizing or dry rolling and in this case the components may either be mixed first and then atomized, or fed to the roller drying mill as a mixture or the components may be combined in the required proportions at a point shortly before the nozzle or the roller feeding device.

It is also possible to produce the novel ingredients by adding the oxygen to the initial products which are dissolved or mixed, i. e. the non-ionogen detergent and the phosphate anhydride, for instance, by adding hydrogen peroxide, sodium peroxide or similar per-compounds to said components. If a pH-value of about 7 or less is maintained in this process, oxygenous compositions are obtained which are very stable even in a liquid or pasty condition.

Example 3

25 kgs of linen are washed in a washing bath of 100 liters containing 2 grams isooctyl phenyl polyglycol ether and 1.5 grams of sodium perpolyphosphate per liter. The washing bath which is at first at room temperature is gradually heated to 80° and the material to be washed is then rinsed as usual. The pH-value of the bath amounts to 6,8. By way of alternative, an alkali perpyrophosphate or an alkali permetaphosphate may be used instead of sodium perpolyphosphate.

Example 4

In order to wash 25 kgs of cotton texture, a washing liquor is prepared in which 200 grams dodecyl phenyl polyglycol ether, 20 grams of sodium perborate and 100 grams of sodium pyrophosphate are added per 100 liters water. The washing and rinsing operations are carried out in the usual manner. The material to be washed will then show a very high degree of whiteness, even in case of a very intensive initial soiling.

By way of alternative, perpyro-, perpoly- or permetaphosphate may be used instead of pyrophosphate in the mixture with sodium perborate.

Example 5

In order to wash artificially soiled frotté strips, a washing bath is produced containing 2 grams dodecyl phenyl polyglycol ether, 1 gram sodium polyphosphate ($Na_5P_3O_{10}$) and 1 gram potassium persulfate per liter and having a pH-value of 6,9 to 7,1. By washing the material with this liquor a higher degree of whiteness is obtained than with a liquor containing no potassium persulfate.

The method of the present invention has been described in detail with reference to specific embodiments. It is to be understood, however, that the invention is not limited by such specific reference but is broader in scope and capable of other embodiments than those specifically described.

ANTON VOLZ.

Published May 25, 1943

Serial No. 314,001

ALIEN PROPERTY CUSTODIAN

MEANS FOR RESILIENT MOUNTING OF UNITS

Manlio Marzetti, Milan, Italy; vested in the Alien Property Custodian

Application filed January 15, 1940

This invention relates to resilient or damped mounting of parts or units embodied in radiophonic apparatus, talking machines and the like, on supports therefor and more particularly in the respective containers as cases and cabinets.

In this invention a carrier as a plate or frame carrying the part or unit to be supported resiliently is mounted on a support or in a container to bear thereon and is engaged with perimetrical parts of said container by the intermediate of resilent members.

More particularly in a preferred embodiment of this invention said carrier is engaged with the perimetrical walls of the container by means of a peripheral lining of soft material which may consist of a rubber cord or pipe, said lining being located intermediate an abutment provided in said carrier and a cooperating abutment provided in said support or container.

Said carrier preferably bears on said support or container by resilient or soft pads, say of rubber, which may be engaged on fasteners provided within the periphery of the cooperating carrier and support.

This invention is hereinafter described in two embodiments thereof given by way of example and with reference to the annexed drawing in which:

Fig. 1 is a vertical section of a cabinet in which a driving unit for talking machine records is mounted in accordance with this invention, said unit including a driving motor and a turn plate driven by said motor and intended to carry and drive a record;

Fig. 2 is a fragmentary section reproducing a right hand portion of Fig. 1 to an enlarged scale;

Fig. 3 is a fragmentary section of an arrangement according to this invention for mounting a radio receiver chassis in a cabinet.

In the embodiment of Figs. 1 and 2, a talking machine record turn device comprising an electric motor 6 and a turn plate 12 located on a carrier plate 5, is located within a cabinet comprising the perimetrical walls 1 said plate 5 being supported on said perimetrical walls 1. The said perimetrical walls 1 are provided in their internal surface with a seat in which a soft lining 11 is located and the edges of the plate 5 abut on said lining 11 the plate 5 and the unit carried thereby being thus held in position resiliently.

The soft lining 11 which interengages the plate 5 with the walls 1 of the cabinet is located intermediate a stepped notch 10 of the said perimetrical walls 1 and an edge step 9 of the plate 5, said notch and step providing confronting abutments as shown in Fig. 2; the lining 11 conveniently consist of a small-size rubber pipe and it is divided in a number of sections and more particularly in a number of sections which corresponds with the number of sides of the carrier plate 5 and container 1.

The plate 5 is conveniently supported on the walls 1 by the intermediate of soft members, as elastic pads 4, which are conveniently located in seats 3 provided in brackets 2 fast on the internal faces of the perimetrical walls 1 of the cabinet; the pads 4 are conveniently made of soft rubber of the so-called antimicrophonic type.

Fig. 3 shows an embodiment of this invention in connection with resilient mounting of a radiophonic apparatus on a support within a cabinet.

In this embodiment the support member 2 has a frame 13 fast thereon and the edge of said frame has an outward flange 10 providing an outer peripheral abutment; pads 4′ of soft rubber are located within said frame 13 and rest thereon.

The chassis of a radio receiver, as outlined at 17, is fastened by means of straps 16 on a carrier frame 15 which bears on said pads 4′ and encircles the support frame 13; said frame 15 provides a flange 9 at its lower edge, which extends inwardly under the flange 10 and is vertically spaced under it, to provide an abutment confronting with the abutment provided by said flange 10.

A rubber pipe 11 is located intermediate the abutment flanges 9 and 10 and said pipe 11 resiliently interengages the system 15, 9, 16 with that 13, 10 both in upward and in transverse direction; on the other hand the system 15, 9, 16 is resiliently supported on the frame 13 and support 2 by the intermediate pads 4′ which are fastened in position by means of studs 14 extending in recesses 4″ thereof.

As an effect of the described arrangement, the supported unit is resiliently engaged in position both in transverse and in vertical directions; on the other hand the provision of the lining 11 is also efficient to prevent foreign matters from entering beyond it and to improve the appearance of the whole.

MANLIO MARZETTI.

PUBLISHED

MAY 25, 1943.

BY A. P. C.

M. MARZETTI

MEANS FOR RESILIENT MOUNTING OF UNITS

Filed Jan. 15, 1940

Serial No. 314,001

Fig. 1

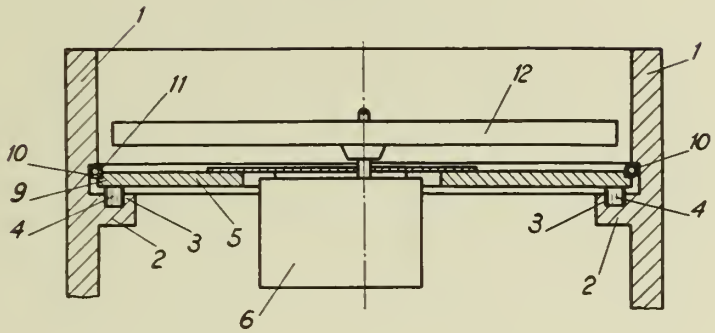

Fig. 2

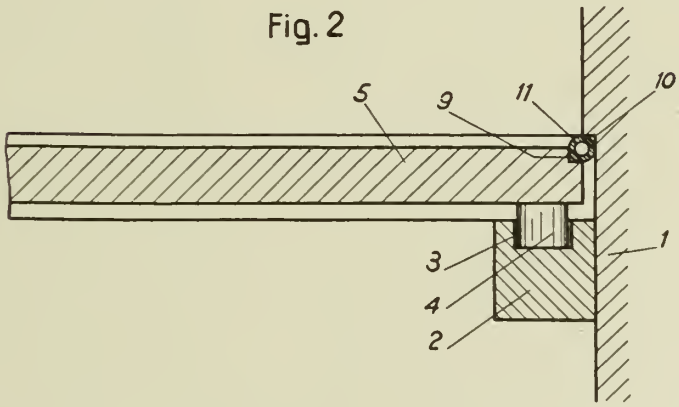

Fig. 3

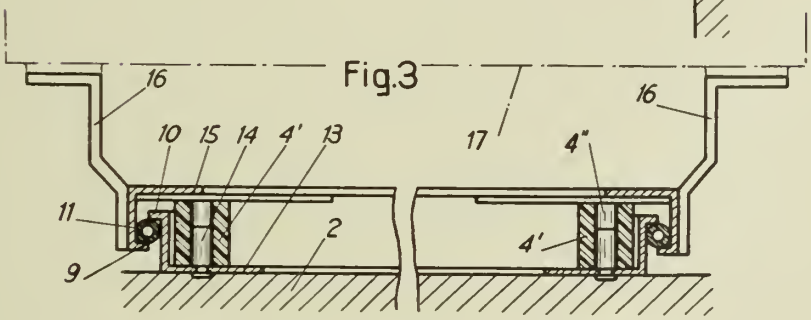

Inventor:
M. Marzetti
By E. F. Wenderoth
Atty

Published May 25, 1943

Serial No. 314,195

ALIEN PROPERTY CUSTODIAN

RECEIVER

Hans Leo Dietrich, Berlin, Germany; vested in the Alien Property Custodian

Application filed January 17, 1940

The invention relates to a tuning arrangement for receivers which can be used more especially for ultra-short waves and decimeter waves. It is known that in case of short waves it is no longer possible to achieve such a high degree of constancy of the frequency as in the case of longer waves, since changes in the relative distances of the tube electrodes caused by temperature variations, for instance, already have an essential influence upon the frequency which is not experienced in the case of long waves. Therefore, the frequency of a short wave transmitter inevitably fluctuates beyond the band width of the input circuit of the receiver such that reception stops or when resuming the communication cannot be realized at all. Furthermore, the same drawbacks are inherent in the oscillation generators employed as oscillators in superheterodyne receivers and thus the produced intermediate frequency deviates from the desired value not only on account of the variation of the transmitter wave, but also on account of the variation of the local oscillator frequency. In order to insure a safe operation means must therefore be employed which enable the receiver to receive waves which are unstable within a certain frequency range. Thus it has become known, for instance, to wabble frequency of the local oscillator of the receiver with a frequency lying beyond the audible limit, about a low value so that also the intermediate frequency fluctuates periodically about an average value. The permissible fluctuation width of the transmitter frequency however, is hereby extremely small with with the result that in most cases this arrangement is insufficient for practical purposes. Furthermore, it is known that the receiver can be sharply tuned in an automatical manner to the transmitter wave whereby disturbances caused by the lack of constancy of the transmitter wave, can also be avoided within narrow limits. But since the range of this automatic vernier tuning is very narrow, this arrangement fails also if for instance at the switching-in of the receiver, the transmitter wave lies outside the range of the vernier tuning.

In accordance with the invention an entirely safe reception of the desired transmitter is rendered possible in that a pendulum movement of the tuning organ of the receiver within which a frequency range will be swept which corresponds to the possible fluctuation range of the transmitter frequency, is automatically stopped at resonance of the receiver with the transmitter frequency and at the same time an arrangement for the automatic vernier tuning is switched-in.

This offers the advantage that the range of the automatic vernier tuning can be chosen as small as desired, i. e. its accuracy can be chosen extremely high, while wide fluctuations of the transmitter frequency or local oscillator frequency are still admissible.

The first-mentioned feature of the invention, namely the periodic vibratory movement of the tuning organ be termed "finding performance" denoting that the receiver next finds automatically the transmitter wave within a given range and holds on to this wave in this tuning stage at resonance with the transmitter wave. The second feature of the invention, namely, the automatic vernier tuning which can be carried out in any desired manner, serves for enabling the receiver to follow continuously eventual variations of the transmitter frequency.

It is readily seen that with the method of tuning carried out in accordance with the invention, the reception is always accomplished in exactly the same manner as in the case of the normal receiver so that all disturbances caused for instance by the wabbling of the local oscillator are eliminated. It should be remarked already at this place that the arrangement according to the invention is equally well effective whether in the case of variations of the transmitter frequency being received, or, in the case of using a superheterodyne receiver, at a variation of the frequency of the local oscillator. Since at ultra-short waves, superheterodyne receivers are often used and the transmitters can usually be given a constant frequency through a larger number of means, the last-mentioned case of the fluctuation of the local oscillator frequency will be the more frequent case.

The finding performance will next be elucidated in reference to Fig. 1. Item H represents the high frequency part and the mixer stage of a superheterodyne receiver to which is applied in addition to the receiving frequency, the local oscillator frequency of the oscillator O which is indicated only by an oscillatory circuit for the sake of simplicity. The intermediate frequency formed is amplified in the intermediate frequency part Z then demodulated and applied to the audio-frequency part N of the receiver. In order to find the transmitter wave being received, the tuning of the local oscillator O is moved reciprocally across a certain frequency range. To this end a motor M is provided which turns the variable condenser of the local oscillator up to a certain angle whereafter the polarity of the motor is reversed by means of a switch U which actuates the contacts *u*, so that the turnings of the condenser takes place in the other direction. If, for instance, the contact E which is coupled for example with the main switch of the receiver, is closed, the finding performance starts immediately irrespective as to whether or not a transmitter wave is present.

Now when the transmitter is being operated and the oscillator O assumes its correct position of

tuning, i. e. the position in which an intermediate frequency appears to which the intermediate frequency amplifier is tuned, the current passing through the intermediate frequency tubes changes at this moment whereby the relay A which lies in the plate circuit of one or of all intermediate frequency tubes, will be actuated. The relay contact pertaining to A and which is placed in the circuit of the motor M and is closed in the position of rest, is designated by *a*. As soon as the correct resonance position of the receiver is attained, the contact *a* will be opened whereby the motor comes to a stop.

The starting of the finding performance at the switching-in of the receiver may be delayed until the receiver has reached the operative state, i. e. until the tubes are heated up. Furthermore, the finding performance may only then be started if it is ascertained in any desired manner that a receiving oscillation is present within the intermediate frequency range.

The mode of carrying out the finding performance according to the invention is not limited to the arrangement shown in Fig. 1; the reciprocating movement of the oscillator tuning may also be obtained by purely electrical means, for instance, with the aid of relaxation circuits through which an inductance, or a capacity has its value varied periodically. Furthermore, the potential which causes the stopping of the reciprocating movement may be derived at any desired plate of the receiver, and therefore also, for instance, at the high frequency part. In the case of a straight receiver the tuning of the receiver input circuit may, for instance, be varied periodically and this variation may be interrupted directly by the current of the high frequency tube.

A practical construction of the switch shown schematically in Fig. 1 is given by the example of Fig. 2. Herein is item A the shaft of the variable condenser of the tuning arrangement, which shaft is rigidly connected to a lever S and is coupled with a motor M not shown in the drawing. A stationary ring R is arranged concentrically to the shaft and on the said ring, two levers H_1 and H_2 which can be swung about the shaft A, can be tightened up in any desired positions by means of the clamping screws F. The levers H_1 and H_2 are loosely mounted on the shaft A and are equipped with the contacts K_1 and K_2. Now, if the shaft A is driven by the motor causing the lever S to turn, for instance, to the right, the latter arrives at the contact K_1 and actuates the latter which in turn actuates a pole reversing switch so that the latter reverses the direction of movement of the motor. Then the lever S turns in the other direction to the left until it reaches the contacts K_2 thereby again reversing the polarity of the motor, etc. The limits and the central position of the frequency range covered by the tuning organ can be set at will through separate adjustments of the contact levers H_1 and H_2. The positions of these levers are fixedly established preferably through various transmitters given in advance, or the lever positions are fixed in suitable points by means of corresponding stop organs. Obviously, also for the reversing arrangements various structural solution can be found all of which suited for practising the general idea of the invention.

As already pointed out the hitherto described finding performance is switched in simultaneously with the switching-in of the entire receiver, so that until the transmitter wave is found, the tuning organ is next periodically moved in a reciprocating fashion. If no transmitter frequency exists within the range of finding, the tuning organ carries out a continuous pendulum movement so that the absence of a transmitter carrier can be readily verified from the outside. If, however, a transmitter wave is present, the finding performance is stopped when the correct tuning position is reached. But since the transmitter frequency or local oscillator frequency does not remain constant, the receiver would very soon fall out of tis correct tuning position entailing the failing of reception. In order to avoid this condition there is inserted in accordance with the invention simultaneously with the switching-in of the finding performance, an arrangement for the automatic vernier tuning. This arrangement may be of any desired type and may be constructed in a manner known as such. It will, however, be advisable to employ for the automatic vernier tuning the same means as those employed for finding the transmitter wave as will be described in greater detail in the following. In order to gain a control voltage through which the receiver is always brought automatically into the correct position of tuning, there may be employed, in a manner known as such, two circuits which are detuned relative each other and which are placed for instance in the intermediate frequency circuit of the receiver and whose voltages are detected and connected in opposition. If the frequency applied to these circuits varies, also the control potential varies in an unequivocal fashion. Since when operating with ultra-short waves, frequency modulation is ordinarily employed, the arrangement for gaining the control potential can be advantageously used at the same time for the demodulation of the frequency modulated oscillations, since as is known, two relatively detuned circuits connected in opposition across detectors are in fact likewise suited to this end.

The control voltage now is applied, for instance, to a tube in whose plate circuit a differential relay is placed. At the mean frequency which corresponds to the required frequency, the relay contact is in its central position. When the frequency applied to the two circuits increases, the relay contact moves in the one direction, and when the frequency decreases, the said contact moves in the other direction. Now, if the relay is so placed in the circuit of the motor M shown in Fig. 1, that the relay contacts have different directions of rotation of the motors assigned thereto, the tuning of the oscillator 0 is Fig. 1, will be affected when a control potential appears. Now, if the dependence of the direction of rotation of the motor on the direction of the variation of the control voltage is chosen in such a sense whereby in the case of an increase of the frequency to be controlled a rotation of the motor in the direction of low frequencies takes place, the receiver will place itself always in the desired position of tuning. When the transmitter frequency changes, the receiver tuning follows in the proper sense.

In applying the general idea of the invention there is assured next the finding of the transmitter frequency lying at any desired place of the given range and furthermore, an always correct tuning of the receiver also in the case of fluctuations of this frequency.

As stated, the control voltage for the automatic vernier tuning can be derived from the intermediate frequency amplifier. In place of this, also all other known circuits are possible. In the same manner in which in the described example the

finding performance and the automatic vernier tuning can be carried out with the use of the same drive motor, in a variation of the receiver tuning taking place in a purely electrical fashion the same means (for instance, relaxation circuits) may be employed both for the finding as well as for the sharp tuning.

If during the reception the frequency of the transmitter oscillation or of the oscillation of the local oscillator changes suddenly by such high values which cannot be followed-up by the automatic vernier tuning, the finding performance sets-in anew and continues until the transmitter wave is found again. It is hereby of advantage if the finding performance instead of being initiated instantaneously, is switched-in with a certain delay, since it happens often that the transmitter wave varies its frequency during a brief moment but later resumes again the same position. Thus, the stopping of the finding performance may, after reaching the correct tuning position, take place by means of an immediately responding relay, while the next switching-in is carried out by means of a special time delay relay A circuit of this type will be described later on hand of the Fig. 3. The time delay is hereby provided in a manner known as such, for instance, in that a bi-metal strip establishing the contact is passed by the current which initiates the finding performance, such that the contact will be closed only at sufficient heating.

In the operation with ultra-short waves, the distribution of the various transmitters and the ranges thereof across the frequency band are of particular importance. In order to avoid hereby disturbances of the receiver owing to the reflected frequencies, it is of advantage so to adapt the arrangement that the finding performance is finally stopped only when the frequency of the local oscillator lies at the one predetermined side of the transmitter frequency. This condition will be elucidated on hand of Fig. 4. In this figure the frequencies are plotted along the abscissa. Letter S is meant to indicate the normal position of the wave being received and Ü is the desired position of the frequency of the local oscillator of the receiver. Then the intermediate frequency ZF is obtained which would be plotted in the same way if the frequency of the local oscillator were at the place $Ü_f$. In order to avoid disturbances by reflected frequencies etc. it be required however, that the local oscillator operates in Ü. The letters G_1 and G_2 may represent the limits of the range covered during the finding performance. Now, the correct choice of the frequency of the local oscillator to be obtained automatically can be realized in that through suitable choice of the initial direction of rotation of the motor; the frequency of the local oscillator which may be at the place $Ü_e$, for instance, at the switching-in of the receiver, is always moved in the direction upon the limit G_2 at the switching-in of the receiver and away from this limit, whereby contact arrangements are provided in such a manner that the finding performance can be stopped only when the tuning was reversed once at the limit G_2. Therefore, if $Ü_e$ moves to the right, it cannot as yet be stopped at the place Ü but must first reverse its movement at the limit G_2 in order to enter the correct position of tuning Ü in arriving from the right and be fixed in this position.

As can be readily seen, it can then never happen that the finding performance will be interrupted in the tuning position $Ü_f$. In fact if $Ü_e$ is between the limits G_1 and $Ü_f$, for instance, and if, as is required, it moves initially to the right, it cannot be stopped neither in $Ü_f$ nor by Ü, but must first reverse its movement at the limit G_2 in order to arrive in the final position Ü from the direction of higher intermediate frequencies. If, however, $Ü_f$ is to be the desired position of the local oscillator frequency, while Ü is the wrong local oscillator tuning, the initial movement is to take place towards the left and the arrangement is to be so adapted that the finding performance can be stopped only after a reversal at the limit G_1. Then exactly the same conditions must be fulfilled as before.

If the transmitter frequency should have moved such a distance that the correct tuning position cannot be found at all within the range of finding the receiver cannot stay on a wrong tuning position because the automatic vernier tuning operates in the wrong direction in this case and the receiver moves out of its tuning position again. The hereby prevailing conditions are shown in Fig .5. The limits of the finding performance are again designated by G_1 and G_2 while S represents the normal position of the transmitter frequency and Ü is the correct position of the frequency of the local oscillator. Now, if the transmitter frequency moves towards the place S_m, the proper position of the frequency of the local oscillator would lie outside the limits of the finding range, namely, outside the limit G_2 and thus the receiver cannot move into this position.

On the other hand it would be possible that the receiver remains with the tuning of the local oscillator at the place $Ü_m$ because in this place the proper intermediate frequency is obtained with the transmitter frequency S_m. This condition could neither be prevented through the described method of fixing the receiver only when the tuning means has reversed at a limit of the range. But in this case the automatic vernier tuning operates in the wrong direction, i. e. when the frequency of the local oscillator approaches the place $Ü_m$ the control voltage acts in the sense whereby the tuning means is turned beyond the place $Ü_m$, so that $Ü_m$ is likewise not suited as final tuning position. This condition can serve for verifying the fact that the transmitter frequency or the receiver frequency has moved too far out, i. e. that the range defined by the limits G_1 and G_2 is too narrow.

A circuit fulfilling these conditions is shown in Fig. 3. Herein is M the motor and U is the reversing arrangement just as in the case of Fig. 1 whereby the said reversing arrangement acts upon the two contact pairs K_1 and K_2 in accordance with Fig. 2. As in Fig. 1, item A designates the relay which serves for the tuning position. The appertaining contact is designated by *a* which is closed at a wrong tuning or at the absence of the transmitter wave. Now it is assumed that the correct tuning position has not yet been reached and that, therefore, the contact *a* is closed. Consequently, the relay D will be actuated and closed its contacts d_1 and d_2. The relay D has placed in parallel thereto the time delay relay *Bi* having the contact *bi* and which, as already stated, serves for causing the finding performance to start with a certain time delay. Otherwise this relay and its contact entirely correspond with the relay D.

As is seen, the motor M is now in operation receiving its feed voltage across the contacts b_3 and b_4 from the voltage source *Sp*. The lever S of the

reversing arrangement has hereby moved downwards. If the tuning passes at this movement a place in which a correct intermediate frequency appears, the contact a will be released. However, the rotation of the motor can hereby not as yet be interrupted, since the relay D maintains its position across its contacts d_1 and bi and across the contact b_2 which is closed in the position of rest thus retaining a conducting connection between the motor and the feed voltage source. Thus, the tuning arrangement moves beyond this position and arrives at the contact k_2 which it short circuits. Then the relay B will be energized and the contact b_1 will be closed, while the contact b_2 will be opened and the contacts b_3 and b_4 will be moved over. Meantime the contact a has closed again since the tuning has moved beyond the correct value of the intermediate frequency. The switching of b_3 and b_4 has the effect that the direction of rotation of the motor will be reversed whereby the lever S will be moved upwards. Also when the contact k_2 is open does the relay B hold its position across the contacts b_1 and d_2. Now, if a correct position of tuning is arrived at again, the contact a will be released and therefore, the motor circuit will be cut because the contacts b_1 and d_1 will be opened while b_2 was open in the first place due to the excitation of B and thus the relay winding D no longer receives current. As soon as D is released, d_2 will be opened so that B has no current while the contact b_1 will be opened and the contact b_2 will be closed. But the motor cannot start again since d_1 and b are open. Since owing to B being inactive, the contacts b_3 and b_4 return to the right into the position of rest, the initial state is realized again and the same performance begins again in exactly the same manner when the transmitter wave is interrupted.

If no transmitter wave can be found within the entire frequency range covered by U, the lever S moves to and fro between the contacts k_1 and k_2. A short circuit of k_2 results in a switching of the contacts b_3 and b_4 as already pointed out and these contacts remain in the left position since d_2 is closed in the position of rest and b_1 will likewise be closed when k_2 is short circuited. It is only when the lever S arrives in the other limit position and short circuits the contact k_1 that the winding B will be short circuited so that b_1 will be released and b_3 as well as b_4 return again to the position of rest. The direction of rotation of the motor will then be reversed.

With the circuit illustrated in Fig. 3 it can be accomplished in fact that only a single one of the possible positions of the frequency of the local oscillator with respect to the transmitter frequency leads to the stopping of the finding arrangement. The automatic vernier tuning will in no ways hereby be affected since the local oscillator is obviously always correctly controlled once it has been given its proper position. As already explained in connection with Fig. 4, in the case of a position of the frequency of the local oscillator at the other side of the transmitter frequency, the initial direction of rotation in Fig. 4 must obviously be upwards and the contacts k_1 and k_2 must be interchanged.

It will now be shown on hand of Fig. 6 that in applying the idea of the invention and in employing an additional means a substantial saving in the band width required for any transmitter is realized and that the transmitters can be placed nearer each other without mutual disturbance being encountered. If S represents again the transmitter frequency being received and if U designates the correct position of the local oscillator, the initial direction of rotation of the motor is to be such that the frequency of the local oscillator moves to the left at the beginning of the finding performance. Now, if a further transmitter frequency S_f exists within the limits G_1 and G_2, the danger exists that after reversing its movement at the limit G_2 the frequency of the local oscillator stops at the place $Ü_f$ where the same intermediate frequency will be formed as in Ü but this with the wrong transmitter so that the wrong transmitter will be received. However, the receiver cannot stop at the wrong transmitter wave, because in this case, as already stated, the control voltage of the automatic vernier tuning acts in the wrong direction and withdraws the tuning again from this position of tuning. The finding performance then starts anew until the wrong position of tuning is found again, etc. But the receiver can in no ways be brought beyond the wrong tuning position and into the range of the correct tuning position. Now, if care is taken that the disconnection of the finding performance can happen only when the frequency of the local oscillator approaches the correct intermediate frequency from the side of the higher intermediate frequencies while on the contrary the interruption of the finding performance is rendered impossible if the correct tuning is obtained from the side of the low intermediate frequencies, also the place $Ü_f$ cannot serve for the stopping of the finding arrangement such that the tuning moves beyond the said place and reaches the correct position Ü from the side of the higher intermediate frequencies.

This can be done easily, for instance, in that by means of potentials, derived from the one of the two circuits for the automatic vernier tuning, tuned, for instance, to the higher frequency, which circuits are detuned relative each other, relay contacts are prepared in such a manner that they lead to the stopping of the finding performance only when potentials are actually applied to the said circuit, i. e. when the intermediate frequency has been brought to the center position from the side of the tuning of this circuit.

Finally in many cases not further described herein for the sake of simplification, an automatic exclusion of wrong transmitter frequencies lying within the range of finding can already be accomplished solely by the automatic vernier tuning, since at the stopping of the finder arrangement at a wrong tuning position, the vernier tuning acts in the wrong direction as soon as it begins operating, as a result of which the finding performance will be switched-in again whereby the correct transmitter wave will then be found automatically. In order to contribute to this action it is of advantage instead of stopping the finding performance exactly at resonance frequency to have it cease at a place lying at a short distance from said resonance place inside the range of the vernier tuning in order that in any event the automatic vernier tuning will be put in operation. In view of the speed of the entire switching performances this does not involve any appreciable delay of the tuning performance.

HANS LEO DIETRICH.

PUBLISHED
MAY 25, 1943.
BY A. P. C.

H. L. DIETRICH
RECEIVER
Filed Jan. 17, 1940

Serial No.
314,195
2 Sheets-Sheet 1

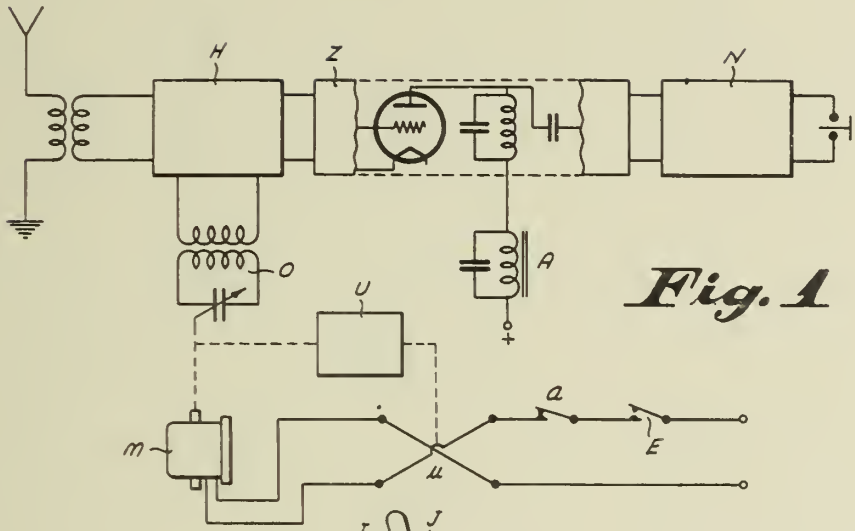

Fig. 1

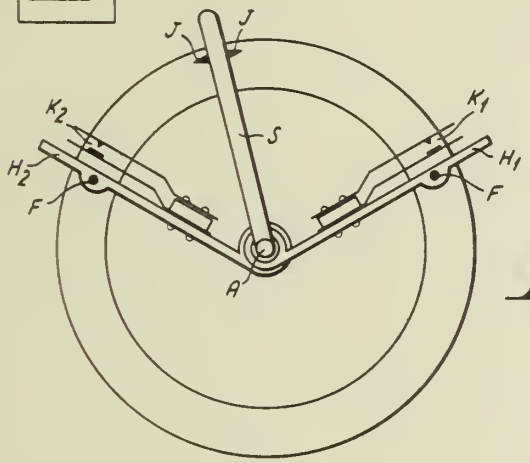

Fig. 2

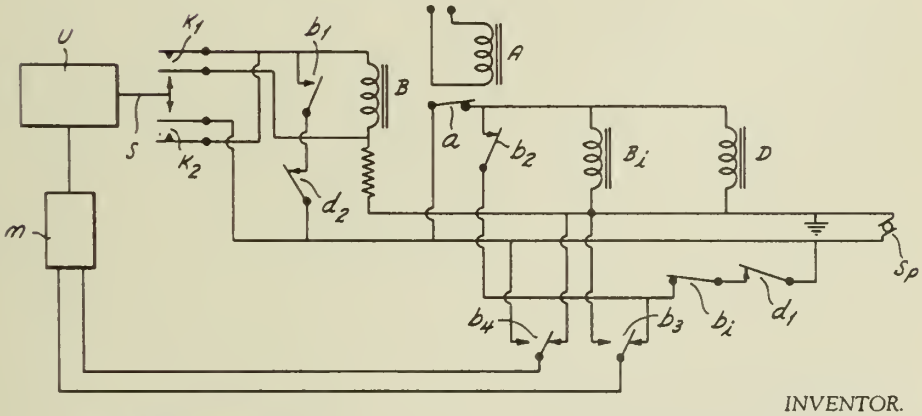

Fig. 3

INVENTOR.
HANS LEO DIETRICH
BY
H. S. Brown
ATTORNEY.

PUBLISHED
MAY 25, 1943.
BY A. P. C.

H. L. DIETRICH
RECEIVER
Filed Jan. 17, 1940

Serial No.
314,195
2 Sheets-Sheet 2

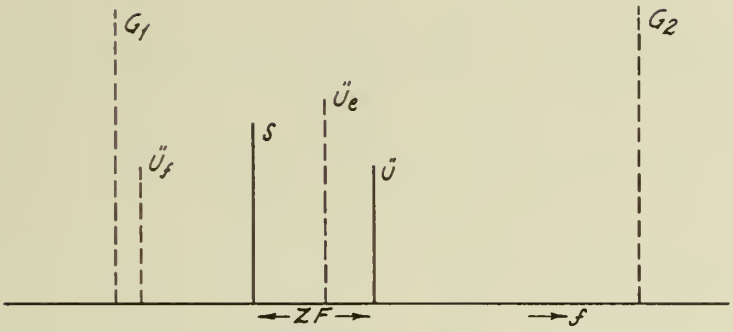

Fig. 4

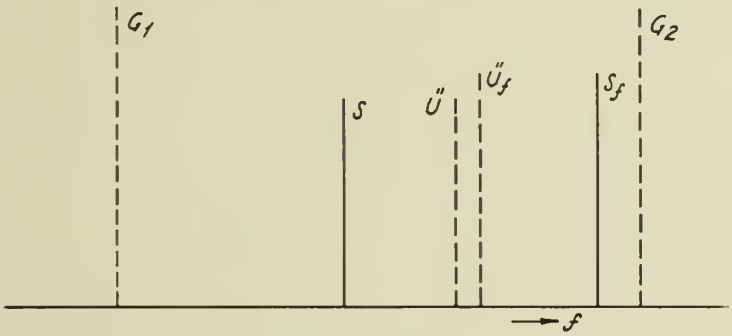

Fig. 6

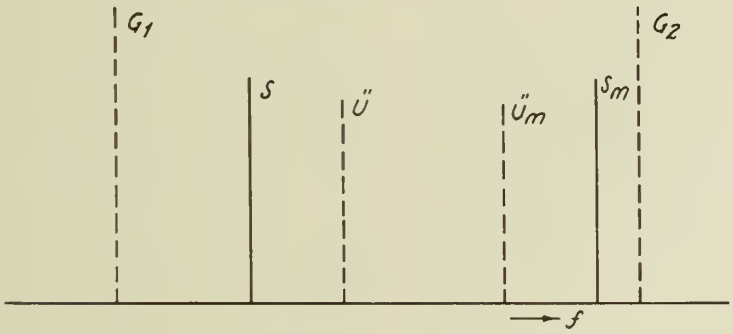

Fig. 5

INVENTOR.
HANS LEO DIETRICH
BY H. S. Grover
ATTORNEY.

Published May 25, 1943

Serial No. 314,406

ALIEN PROPERTY CUSTODIAN

DEFORMABLE SYSTEMS

Jean Mercier, Neuilly-sur-Seine, France; vested in the Alien Property Custodian

Application filed January 18, 1940

The present invention relates to deformable systems of the kind including mechanical parts movable relatively to one another and forming between them at least one fluidtight chamber filled with a fluid (liquid, gas, or both) acting as a cushion of any suitable arrangement.

The main object of the present invention is to provide a system of this kind which is better adapted to meet the requirements of practice than those used up to the present time.

The invention is especially, although not exclusively, concerned with pneumatic or oleo-pneumatic suspension systems for terrestrial or aerial vehicles and in this case a particular object of the invention is to provide means for either maintaining a constant height of the vehicle above the ground despite variations of the load of said vehicle, or varying this height according to the needs.

Such a system is particularly interesting when applied to aircrafts the landing gear of which (of the pneumatic or hydro-pneumatic type) is to be of variable length, either, for instance, for permitting of fitting the landing gear into a reduced housing of the airplane body, during retraction, or for giving the landing gear the necessary height when the airplane is taxiing on the ground prior to taking off or after landing, or again in order to reduce the total height of the airplane resting upon the ground so as to permit or to facilitate displacements thereof inside places of limited height (in airplane carriers or underground sheds, for instance).

In this particular case, an object of the invention is to provide means for varying the length of the landing gear which call for the application of a relatively low force for producing either the retraction or the expansion of the deformable system.

Another object of the invention, in the same case, is to devise said means so that the weight of the machine can be employed for starting the retraction of the deformable system, that is to say for reducing the length of the landing gear.

The present invention is also concerned, among the deformable systems above mentioned, with those for producing a variable pressure in a device for returning one or several elements to a predetermined position, for instance a device for constantly urging toward a median position the front wheel of a tricycle airplane landing gear.

The invention further relates, among these deformable systems, to pneumatic or oleo-pneumatic coupling devices or railway vehicle buffers, and in this case, an object of the invention is to make it possible to vary their length at will, so as to permit of assembling or detaching vehicles, and to ensure the desired elasticity of said devices under the effect of the stresses they have to undergo.

According to the essential feature of the present invention, the fluidtight chambers with which the deformable systems are provided, as above stated, are connected with variable volume reservoirs of fluid.

Other features of the present invention will result from the following detailed description of some specific embodiments thereof.

Preferred embodiments of the present invention will be hereinafter described, with reference to the accompanying drawings, given merely by way of example, and in which:

Fig. 1 diagrammatically shows, in section, an embodiment of the present invention as applied to a landing gear for an aircraft;

Fig. 2 is a view, similar to Fig. 1, showing a modification;

Fig. 3 is a plan view, partly in section, of a device for elastically urging toward its middle position the front wheel of the tricycle landing gear for an airplane.

In the embodiment of Fig. 1, the support of each wheel of the landing gear is constituted by a shock absorber including a cylinder **1** in which can move a piston **2** connected to the axle **3** of wheel **3***a*. The two cylinders corresponding respectively to the two wheels of the landing gear communicate together through a conduit **4** and they are filled with a fluid under pressure. A variable volume reservoir **5** is also connected to conduit **4**. This reservoir includes a piston **6** adapted to be displaced by the inflow or the outflow of a fluid under pressure, such as oil, at **7**.

The arrangement disclosed by Fig. 2 is similar to that of Fig. 1, except for the variable volume reservoir, which is of different construction.

This reservoir includes a deformable bag or pocket **8**, which constitutes a fluidtight partition separating reservoir **5** into two chambers the relative volumes of which are determined by the deformations of bag **8**. The latter may be constitutes by an elastic matter, such as rubber, or by a merely flexible material or any other material which is sufficiently fluidtight and deformable. The inside of bag **8** is connected to conduit **4**.

The systems above described will work in the following manner:

It will be supposed that the length of the land-

ing gear is to be increased in order to permit taxiing of the airplane on the ground.

In this case, a fluid under pressure, such as oil, is admitted at 7 into reservoir 5, which pushes piston 6 inwardly (in the case of Fig. 1) or compresses bag 8 (in the case of Fig. 2) and drives out the fluid under pressure (compressed air, oil, etc.) present above piston 6 (Fig. 1) or inside bag 8 (Fig. 2) into conduit 4.

Consequently, pistons 2 are pushed downwardly and the elastic supports of the wheels assume their maximum length.

When, on the contrary, it is desired to retract or reduce the length of the supporting means constituted by cylinder 1 and piston 2, for instance in order to facilitate the displacements of the airplane inside a shed of limited height, oil is withdrawn from reservoir 5 under piston 6 (case of Fig. 1) or on the outside of bag 8 (case of Fig. 2). Under the effect of the weight of the airplane, pistons 2 then drive the fluid from cylinders 1 into reservoir 5, and the length of the elastic supports of the wheels is reduced.

The example of Fig. 3 relates to the case in which an element, such for instance as the front wheel of a so-called "tricycle" landing gear is to be constantly urged toward the median position. In this case, reference character 1 designates the deformable system constituted by a cylinder and a piston and connected through a pipe 4 to a reservoir 5, of variable volume, for instance containing an elastic bag 8, of the same type as in the embodiment of Fig. 2. The cylinder of deformable system 1 is hinged at one of its ends, at 9, to a piece 10 which is rigid with a semi-annular member 11 surrounding the rod 12 which constitutes the support of the landing gear wheel which is to be constantly urged toward the intermediate angular position. On the other hand, the end of the piston rod of the deformable system 1 is hinged at 13 to a piece 14 which is rigid with a semi-annular member 15 surrounding the other half of rod 12. These two semi-annular members 11 and 15 are both pivoted at 16 to a part of the airplane body. Rod 12 is provided with a projection 17 engaged in a notch formed between respective shoulders of members 11 and 15. Thus, when rod 12 is turned about its axis, it acts either on member 15 and piece 14, which is rigid therewith, or on member 11 and piece 10 which is rigid therewith.

This device will work in the following manner: When rod 12 turns about its axis, for instance in the direction of arrow *f*, it pushes pieces 15 and 14 in the direction of arrow *f'*. This displaces the point of articulation 13 of the piston rod of the deformable system 1 in the same direction *f'* and causes said piston to be driven into the corresponding cylinder. The fluid present in this deformable system, in reservoir 5 and in conduit 4 is compressed. On the other hand, as semi-annular member 11 is provided with a cylindrical projection 11*a* fitting against the cylindrical side of rod 12, neither member 11 nor piece 10, which is rigid therewith can move in the direction of arrow *f'*. Therefore, by reaction, the compression produced in the cylinder of the deformable system tends to expel the piston from said cylinder and therefore to bring back rod 12 into its initial position.

Likewise, when rod 12 turns about its axis in the opposite direction, its projection 17 moves pieces 10 and 11, and pushes articulation point 9 in the direction of arrow *f''*. This movement also produces a compression of the liquid present in the cylinder, and as, in this case, the piston cannot move, the system tends, by reaction, to return the parts to their initial positions.

Therefore, in this case, I obtain a system which is brought back, when moved in one direction or the other, to its initial position under the effect of a compression of the fluid present in the deformable system 1.

The system above described will therefore constantly tend to urge back the wheel supported by rod 12 toward the desired position thereof. Through a suitable adjustment of the initial pressure in system 1—4—5, it is possible easily to determine the resistance of the wheel to lateral stresses.

On the other hand, the plant according to the invention permits of adjusting at will the magnitude of the deformations undergone by the deformable system or systems. This result is obtained by varying the pressure in the spaces between pistons 2 and 6 (or between piston 2 and elastic bag 8). It is thus possible to obtain, at will, a soft or hard working of a shock absorber.

Of course, I may employ any desired number of variable volume reservoirs and of deformable systems and these reservoirs and systems may be either all connected together or, on the contrary, connected by groups.

JEAN MERCIER.

PUBLISHED

MAY 25, 1943.

BY A. P. C.

J. MERCIER

DEFORMABLE SYSTEMS

Filed Jan. 18, 1940

Serial No.

314,406

2 Sheets-Sheet 1

Fig. 1

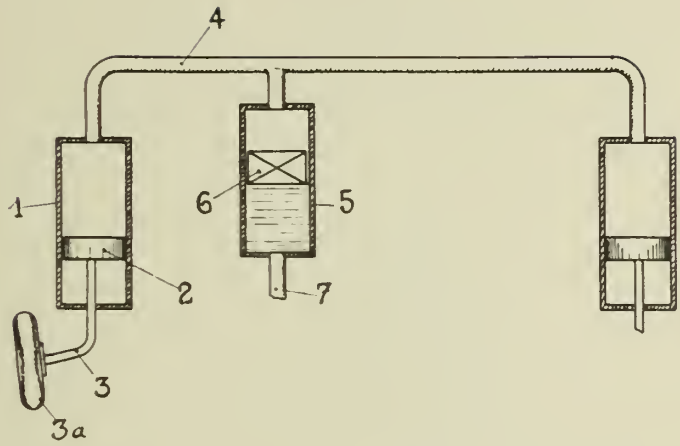

Fig. 2

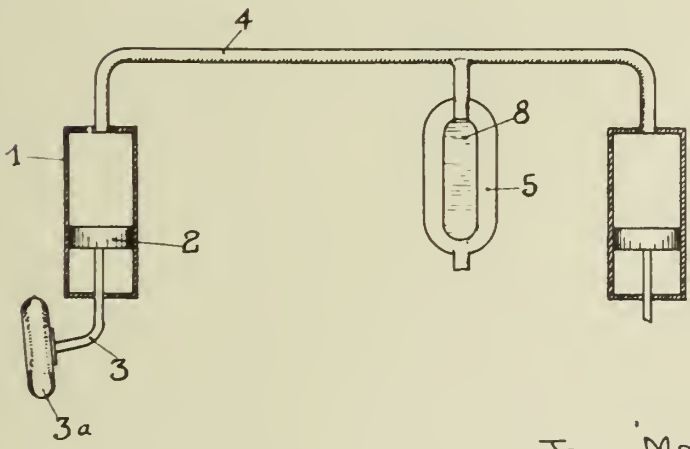

Jean Mercier
INVENTOR
By [illegible]
his ATT'Y.

PUBLISHED
MAY 25, 1943.
BY A. P. C.

J. MERCIER
DEFORMABLE SYSTEMS
Filed Jan. 18, 1940

Serial No.
314,406
2 Sheets-Sheet 2

Fig. 3

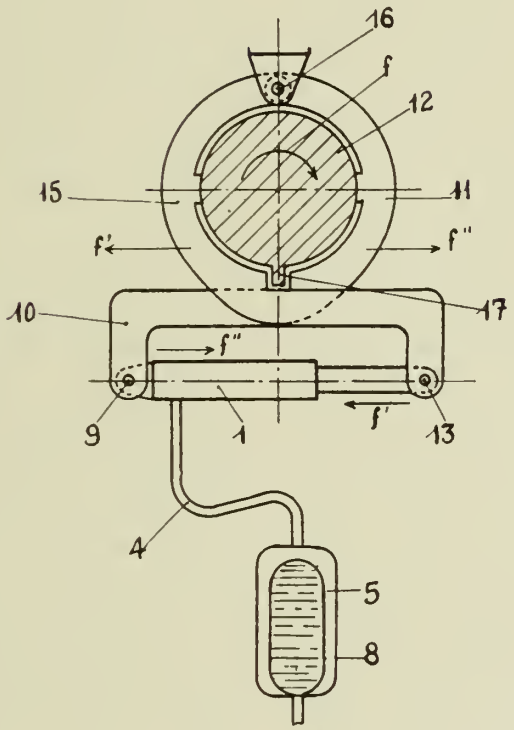

Jean Mercier
INVENTOR
By Otto Schmidt
his ATT'Y.

Published May 25, 1943

Serial No. 314,407

ALIEN PROPERTY CUSTODIAN

MACHINES FOR STAMPING OR MARKING LETTERS OR FOR SIMILAR OPERATIONS

Jean Mercier, Neuilly-sur-Seine, France; vested in the Alien Property Custodian

Application filed January 18, 1940

The present invention has for its object a machine for stamping or marking letters or for similar operations, and provided with a meter.

Machines of this type are already known, in which a meter totalizes the amounts printed by the rollers or wheels carrying figures, when the crank of the apparatus is rotated. However, the known machines are generally of rather complicated construction, since they have to be provided with bulky transmission devices comprising a large number of different elements arranged between the printing wheels or rollers and the counting device.

The purpose of the present invention is to overcome this drawback and the said invention relates to an extremely simple arrangement which enables the meter to be actuated either directly or indirectly by the member which controls the position of the printing rollers.

According to one feature of the invention, the printing wheels or other printing members are arranged in radial slots of a drum which rolls on the surface intended to receive the impression, are actuated by the crank or other actuating member of the apparatus, and are controlled by pull-rods which preferably form racks or the like, that pass freely through said drum and mesh with said rollers, one of the ends of said pull-rods projecting and being of an appropriate shape to enable it to be actuated from the outside for adjusting the position of the corresponding roller, the opposite end of said pull-rods being shaped like a kind of comb or harrow projecting from the other side of the aforesaid drum and having stepped fingers of various lengths, and so constructed that for each position of the roller, a predetermined number of fingers projects relatively to the drum and can mesh with a pinion that drives the counting device.

A separate rack provided with pull-rods and combs corresponds to each printing roller and is adapted to mesh by means of its comb with a different pinion of the counting device. Each of said pinions corresponds in turn to the units, tens, hundreds, etc. figure, of the number to be totalized.

According to another feature of the invention, the pinions of the meter are preferably angularly off-set relatively to the axis of rotation of the drum carrying the rollers, in such a manner as to mesh successively and not simultaneously with the wheels of the meter, the pinion which corresponds to the units being for example actuated by its comb before the pinion which corresponds to the tens and this latter pinion before the pinion which corresponds to the hundreds, etc. the carrying from one pinion to the next pinion being effected for example by means of a projection or the like which rotates the next pinion one unit for each complete revolution of the previous pinion. It will be seen that in this manner an automatic carrying of the units, tens, hundreds, etc. is obtained in the simplest manner. Of course, the same result could be obtained by angularly offsetting the combs that drive the pinion of the meter relatively to the axis of rotation of the drum that carries the printing rollers.

On the other hand, the pull-rods that control each rack which adjusts the position of the corresponding printing roller and of the comb that controls the counting device, could of course be replaced by an oscillating lever, it being possible to place a step-down or step-up gearing between said lever and the rack or between the rack and the wheel carrying the figures (rollers) or between said wheel and the toothed-comb of the rack.

The combs which project from the drum carrying the rollers preferably bear against auxiliary drums longitudinally offset relatively to the main drum.

The counting device may actuate a meter of any type, and the machine can print and count two, three or a larger number of values.

In the accompanying drawing, which is given solely by way of example, an apparatus according to the invention has been shown.

Fig. 1 shows a general perspective view of the essential members of the apparatus;

Fig. 2 is a corresponding elevational and partly sectional view;

Fig. 3 is a view in the direction of the arrow of Fig. 2.

According to the example shown, the main drum 1, the rotation of which is imparted by a crank (not shown) of the apparatus, carries, lodged in radial slots, wheels or rollers provided with type characters, one of which can be seen at 2. All of said rollers are angularly off-set in the drum 1 and carry, for example, on their peripheries, ten figures from 0 to 9, which, in the printing position, extend slightly beyond the circumferential surface of the drum 1, so that the corresponding figure can come into contact with the surface 3 on which the drum 1 is adapted to roll. The position of each roller is controlled in the example shown, by a pull-rod 4 which actuates a rack 5 which passes through a guide channel of the drum 1 and meshes with the corresponding roller 2. It will be seen that for each

position of the pull-rod 4, a character or a figure of the roller 2 is in the printing position. The rack 5 carries, at its opposite end to the pull-rod 4, a comb 6 having stepped teeth 7, 7', 7'', etc.

According to the position of the pull-rod 4 and, consequently, to the adjustment of the roller 2, one, two, three or a larger number of teeth 7, 7', 7'', 7''', of the comb 6 project from the face 8 of the drum 1. In principle, the number of teeth of the comb 6 which are thus stepped may correspond to the number of characters carried by the corresponding roller 2.

The fingers of the comb which project from the surface 8 of the drum 1 bear against a drum of smaller diameter 9, which is concentric with the drum 1.

A corresponding adjusting system is provided for each wheel 2 of the drum 1. In Fig. 1, there can be seen for example the comb 10 corresponding to the rack that drives a second roller. Of course, said comb rests on another drum 11 of smaller diameter which is concentric with the drums 1 and 9. For example, the roller 2 and its rack 5 with the comb 6 may correspond to the units whereas the comb 10 with its rack and its roller may correspond to the tens. Of course, a desired number of other rollers could be provided raving racks and combs corresponding to the hundreds, thousands, etc.

To each comb there corresponds a separate pinion of a counting device of any kind. Thus, pinion 12 is shown arranged on a spindle 13 which is parallel with the axis A—A of the drums 1, 9 and 11. Said pinion, which is tangential to the drum 9, is actuated by the projecting teeth 7, 7', 7'', 7''' of the comb 6. It will be seen that the pinion 12 will be rotated one, two, three or more teeth according to whether one, two, three or a larger number of teeth of the comb 6 are projecting. In a similar manner, a pinion 14 is provided which is fixed on a shaft 15 and is adapted to mesh with the projecting teeth of the comb 10. Corresponding arrangements are provided, if necessary, for the combs corresponding to the other rollers. The counting device may, as stated above, be of any type.

Solely by way of example, there has been shown in Figs. 1 and 2, indicating pointers 16 and 17 which are respectively secured to the shafts 13 and 15, and which are movable in front of appropriate dials 19, 20 and indicate the number registered.

The arrangements described above enables an automatic carrying of the tens, hundreds, etc. to be very simply effected on the various shafts and pinions.

If, for example, the pinions 12, 14, etc. of the counting device are angularly off-set relatively to the axis A—A of the system of drums 1, 9, 11, it is possible, by means of a projection 18 projecting from the pinion 12 which, as has been assumed, corresponds to the units, to rotate the pinion 14 one tooth, which corresponds for example to the tens and carries, for example, a projection 18', as scon at the pinion 12 has effected a complete revolution. In a general manner, this arrangement of angularly off-setting the pinions enables each pinion to be actuated by its corresponding comb, but only after the previous pinion has been actuated so that the carrying of the tens, hundreds, etc. can be effected without any hindrance. Of course, instead of angularly offsetting the pinions 12, 14, etc. the combs 6, 10 etc. could be angularly offset.

The operation of the above described apparatus is as follows: If the drum 1 is rotated by means of the crank not shown of the apparatus, in the direction of the arrow *f*, it will be seen that it is first of all the projecting teeth of the comb 6 which mesh with the pinion 12 and rotate same a number of teeth corresponding to the position of the printing roller 2. Then, it is the teeth of the comb 10 which actuate the pinion 14. After a complete revolution of the crank, the pointers 16 and 17 will show exactly the counting effected by the pinions 12 and 14 by totalizing the figures printed by the rollers on the surface 3 with the figure previously registered by the said pinions.

Of course, instead of making the rack 5 act directly on the printing roller, it is also possible to provide an appropriate step-down or step-up gearing between these two members. On the other hand, instead of securing said rack to a pull-rod 4, it would be possible to provide, for actuating the rack 5 and adjusting the position of the rollers, oscillating levers which would shift the rack by means of an appropriate gear with or without a step-up or step-down ratio.

It will be seen that the arrangement according to the invention is extremely simple and rugged, and enables the bulk and the number of elements of the hitherto known stamping, marking and like apparatus to be considerably reduced.

Of course, the invention is by no means limited to the embodiment illustrated and described which has only been given by way of example.

JEAN MERCIER.

PUBLISHED

MAY 25, 1943.

BY A. P. C.

J. MERCIER

MACHINES FOR STAMPING OR MARKING LETTERS OR FOR SIMILAR OPERATIONS

Filed Jan. 18, 1940

Serial No. 314,407

Fig.1

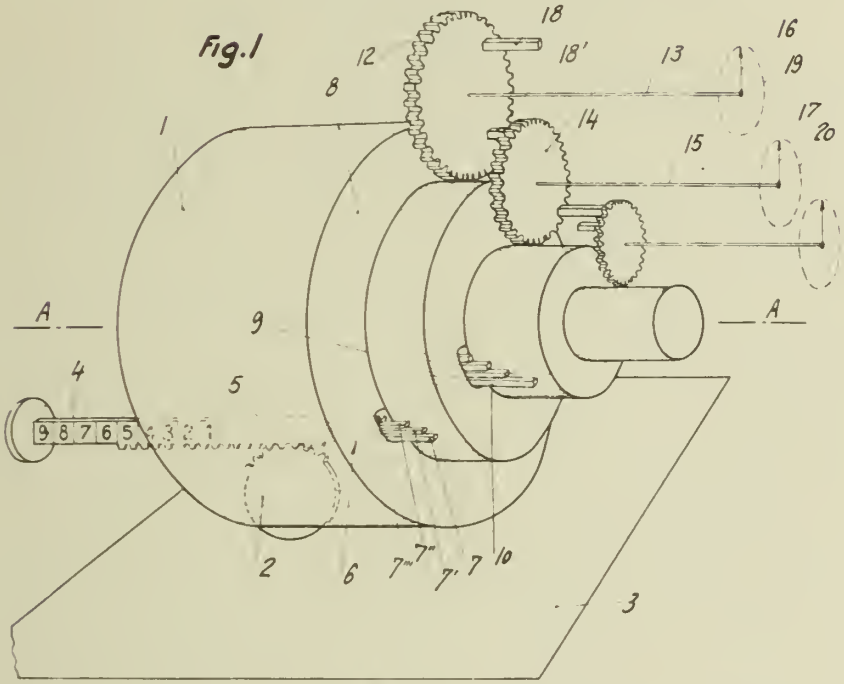

Fig.2

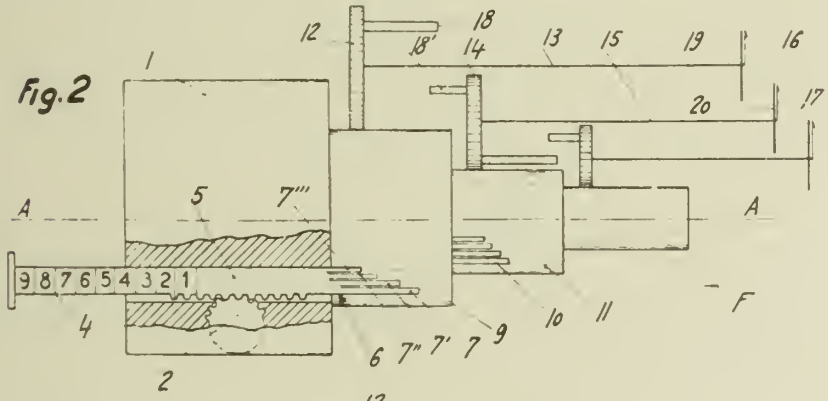

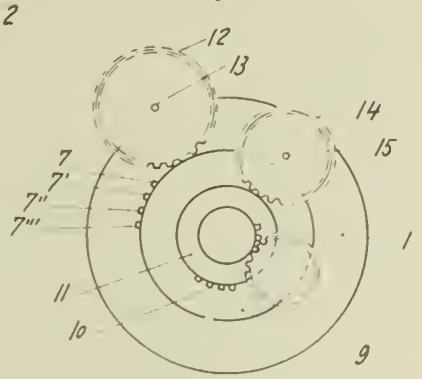

Fig.3

Jean Mercier
INVENTOR
By [signature]
his ATTY.

Published May 25, 1943

Serial No. 314,516

ALIEN PROPERTY CUSTODIAN

COOLED INJECTION NOZZLE

Willy Voit, Stuttgart, Germany; vested in the Alien Property Custodian

Application filed January 18, 1940

The present invention relates to cooled, fluid-controlled injection nozzles for internal combustion engines, of the type in which the nozzle body comprises a cooling chamber surrounding the seat for the nozzle needle and the wall of the nozzle jet and being passed by the fuel before injection thereof.

This arrangement offers the advantage over injection nozzles in which the cooling liquid is passed through chambers separate from the chambers passed by the fuel to be injected that no additional feed and discharge pipes are required which would occupy much space. However, in the known nozzles of this type the cooling chamber has been arranged in the nozzle plate in the form of a helical channel which is very difficult to be made.

A better arrangement is obtained according to the present invention in making up the nozzle body of two sleeve-shaped parts pinned together and defining an annular space surrounding the zone of the seat for the nozzle needle and of the nozzle jet of which sleeves at least one is longitudinally grooved in the fitting surface for feeding the fuel oil to the annular space while a conduit, as far as possible from the foregoing groove, is leading to a second annular space surrounding the shoulder of the nozzle needle at which the fluid pressure exerts its lifting action.

It is an object of the present invention to provide an injection nozzle of the kind referred to, which is easy to make and very efficient in operation.

With this and further objects in view, as may become apparent from the within disclosures, the invention consists not only in the structures herein pointed out and illustrated by the drawings, but includes further structures coming within the scope of what hereinafter may be claimed.

The character of the invention, however, may be best understood by reference to certain of its structural forms, as illustrated by the accompanying drawings in which—

Fig. 1 is a longitudinal section,

Fig. 2 a cross section on line I—I of Fig. 1 and

Fig. 3 a longitudinal section of a modification, showing the nozzle body only.

Similar reference numerals denote similar parts in the different views.

Referring now to the drawings in greater detail, and first to Figs. 1 and 2, it will be seen that the two sleeve-shaped parts 6 and 7 of the nozzle body are held against the front face of a nozzle holder 4, by means of suitable shoulders on the parts as shown and by a cap nut 5 screwed tight by an exterior thread on the holder 4. A nozzle needle 8 slides in a central bore in the inner sleeve 7.

The fuel is fed through a bore 9 in the holder 4 and a communicating channel 10 provided between the sleeves or formed by a groove in one of the sleeves, to an annular cooling chamber 11 defined between the sleeve 7, the outer wall of the sleeve 6, the end wall 6′ of sleeve 6 and a central inward projection 6″ of the same. From this cooling chamber the fuel passes through a bore 12 into an annular control chamber 14 surrounding a conical shoulder 13 of the nozzle needle 8. The needle valve 8 is controlled by action of the fuel upon its shoulder 13 and lifted from its seat 20, against the action of a spring 21, if the force of the fluid pressure acting upon the shoulder 13 overcomes the spring force, whereby the fuel is injected into the cylinder (not shown) through an injection channel or jet 15. A tight fit is provided between projection 6″ of sleeve 6 and the engaging bore of sleeve 7, permitting communication between the two chambers through the bore 12 only.

Referring now to the embodiment shown in Fig. 3, it will be noted that the valve seat 20*a* for the nozzle needle 8 and the injection channel 15*a* are in this case formed by the inner sleeve 7*a* while the same were formed by the outer sleeve 6 in the embodiment shown in Figs. 1 and 2. The inner sleeve 7*a* is formed with a projection 7′*a* extending through a bore in the hemispherical end wall 6*a*′ of the outer sleeve 6*a*. The joint between the projection 7*a*′ and the bore is made tight by soldering or welding at 17. By way of alternative, a screw joint may be provided for this purpose which is well known in the art and, therefore, has not been illustrated.

It will thus be understood that my invention suggests the construction of the nozzle body of two sleeves 6, 7, or 6*a*, 7*a* pinned together which in the zone of the seat 20 or 20*a* of the nozzle needle 8 and of the jet 15 or 15*a* of the nozzle form an annular space. At least one of the two sleeves is recessed at its surface engaging the other sleeve for forming a fuel feeding channel 10 to the cooling chamber 11 of the nozzle, while a bore 12 which, as best seen from Fig. 2, is spaced away as far as possible from the point where the groove 10 communicates with the cooling chamber 11, leads to a chamber 14 which directly surrounds the needle 8 at its shoulder 13 acted upon by the fuel pressure to open the valve.

WILLY VOIT.

PUBLISHED

MAY 25, 1943.

BY A. P. C.

W. VOIT

COOLED INJECTION NOZZLE

Filed Jan. 18, 1940

Serial No.

314,516

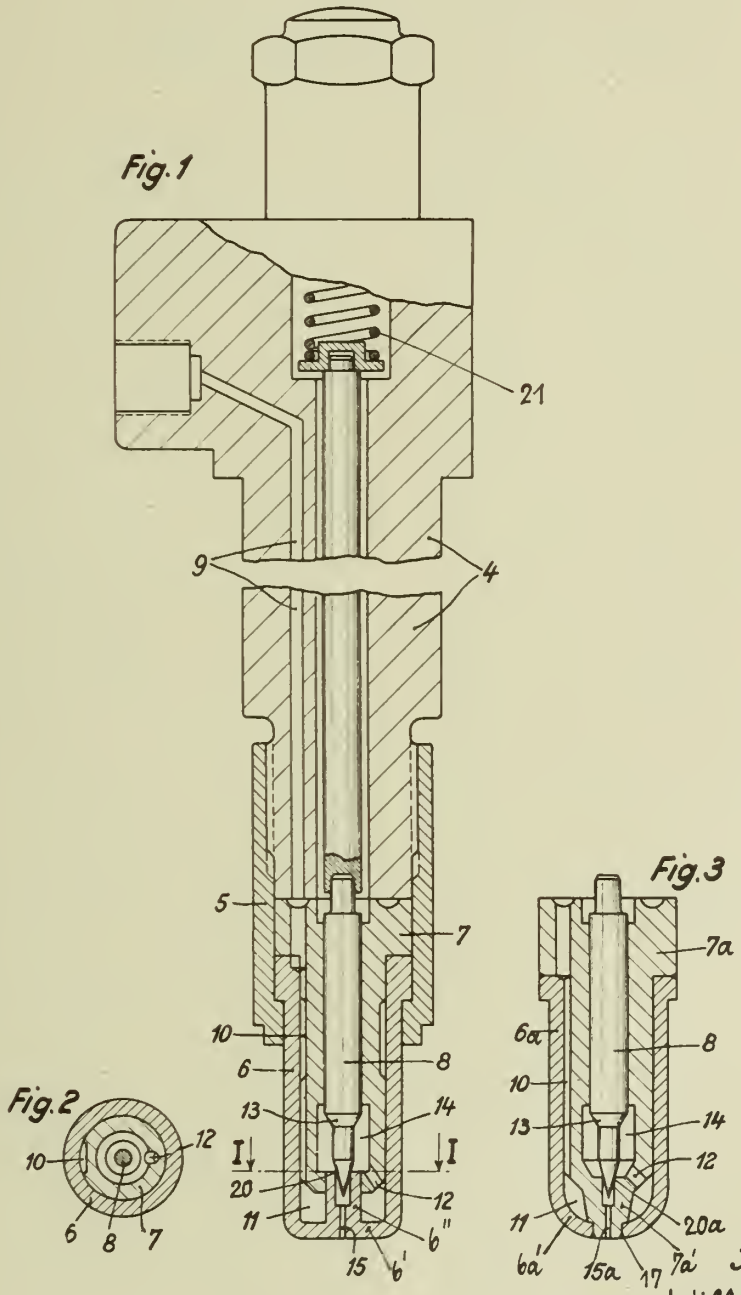

Inventor:

Willy Voit

by Roy F. Stulsard

his attorney

Published May 25, 1943

Serial No. 315,260

ALIEN PROPERTY CUSTODIAN

MEANS FOR CONVEYING MATERIAL FROM ONE MACHINE TO ANOTHER

Vladimir Dmitrijevič Popov, Prague-Bubenec, Bohemia and Moravia; vested in the Alien Property Custodian

Application filed January 23, 1940

This invention relates to a method of and an apparatus for conveying batches of material or separate articles from one machine to another, the first machine which for instance produces separate articles or prepares or weighs off batches of material delivering these articles or batches of material at time intervals differing from those at which they are to be conveyed to the second machine in which, for instance, these articles or batches of material are further operated on.

The solution according to the invention of the above problem consists substantially in this, that the products of the first machine are not conveyed directly to the second machine, but are deposited batchwise in a temporary receiving device consisting, for instance, of receptacles suitable for the reception and discharge of the material, are thereupon taken again batchwise from this device and are conveyed at suitable time intervals to the second machine.

The method and the apparatus according to the invention differ, however, from the known methods and apparatus more particularly in this, that the separate articles or batches of material delivered by the first machine or the vessels intended for temporarily receiving the latter are not moved from the filling place to the discharging place. The temporary receiving stations or receptacles can therefore, if no special technical requirements necessitate their displacement, be arranged so as to be immovable on a closed endless curve, for instance a circular line. Movably arranged is, on the other hand, the member which conveys the separate articles or batches of material from the first machine to the temporary receiving stations and movably arranged may also be the member which removes the separate articles or the batches of material from the store at the said temporary receiving stations.

Thus, the otherwise unavoidable loss of time, necessarily entailed in moving the separate articles or batches of material from one station to another, is eliminated and jolts and damage to the separate articles to be conveyed or to the receptacles containing the material during the movement of the articles or receptacles and to the storing device are avoided. This simplification is particularly important for large or heavy articles, the shifting of which in the temporary receiving device cannot be effected at as great a speed as is permissible for the motion of the individual supplying and removing members in the method according to the invention.

For elucidating the method according to the invention an example of an apparatus is described in the specification and illustrated in the accompanying drawings, which enables a machine for weighing off batches of a loose material, which operates in an irregular manner, to coact with a machine for packaging these weighed-off batches, which operates in a regular manner. Hereinafter the weighing machine will be referred to as the first machine and the packaging machine as the second machine.

Figs. 1 and 2 show a constructional example of the apparatus according to the invention in diagrammatic form,

Fig. 3 an example of the actual construction of this apparatus.

Fig. 4 a part elevation thereof,

Fig. 5 the plan view of Fig. 3,

Figs. 6, 7 and 8 an example of a device for opening and closing the receptacles of the conveying device,

Fig. 9 a twin arrangement of this device and

Figs. 10 and 11 another constructional form of the apparatus according to the invention.

The procedure in the temporary storage of batches of material in accordance with the invention is illustrated diagrammatically in Figs. 1 and 2. The batches of material pass from the first machine into the receptacles **1**, **1a**, **1b**, **1c**, **1d**, **1e**, **1f**, **1g** respectively, which receptacles are for instance arranged immovably in a circle around the axis *a—b* (Figs. 1 and 2), being transferred for instance by means of a feed chute or feed funnel **2**. The chute which is mounted so as to rotate about the axis *a—b* and the other opening of which is preferably concentric with the axis *a—b* is so shaped and arranged that its lower discharge opening **3** is immediately above the upper openings of the receptacles **1**, **1a** . . . After each delivery of the separate batch of material from the first machine into one of the receptacles **1**, **1a** . . . the chute **2** is turned through the pitch angle α, so that the next batch of material is discharged into the next following receptacle. The lower end **3** of the chute thus travels in the periods of time corresponding to the rhythm of the first machine the endless path, on which are arranged the receptacles which are successively filled during this operation. In periods of time corresponding to the rhythm of the second machine the filled receptacles are emptied for instance through the bottom **4** being opened, so that the batches of material are discharged successively into the receiving funnel **5** which is common to all the receptacles. The funnel or hopper **5** is provided with a discharge

opening 6, through which the batches of material fall directly into the second machine or on to a conveyor band which leads to the second machine.

Figs. 1 and 2 also show an example of an apparatus with which the described method can be carried into effect. The filling funnel 2 is rotatably journalled for instance by the pin 7 in a stationary bearing 8 of the table 9 which also supports the receptacles 1, 1a . . . In the position shown the lower end 3 of the funnel is above the receptacle 1. As soon as the latter is filled, the funnel 2 is rotated in the direction of the arrow c (Fig. 2) through the angle α, so that the funnel end 3 will come above the receptacle 1a, which will then be filled, and so forth. Through the opened bottom 4 the filled receptacles are discharged successively into the hopper 5. After the discharge of the receptacle 1d the receptacle 1e is discharged and so on. In Figs. 1 and 2 the receptacles 1a, 1b, 1c and 1d are empty, whilst the receptacles 1e, 1f, 1g and 1 are filled with material. The relation of the numbers of empty and full receptacles varies in dependence on the average performance of the two machines.

Constructional examples of the apparatus according to the invention are illustrated in Figs. 3 to 6. The supply funnel 2 (Fig. 3) is arranged with its upper end in the axis a—b below the outlet of the conveying pipe 10, through which the separate articles or batches of material are conveyed from the weighing machine into the funnel. In the position shown, the lower end 3 of the funnel 2 is over the receptacle 1. The upper end of the supply funnel 2 can be appropriately shaped, for instance for allowing the material to be supplied through several pipes. The pivot pin 7 of the funnel 2 is supported so as to be rotatable in the bearing 8, the bearing 8 forming the cover of the chamber 11 arranged in the table 12. The table 12 rests on supporting columns 12a. To the lower end of the pivot pin 7 is fixed in the chamber 11 a worm wheel 13 which is driven by the worm 14 provided on the shaft 15.

At the outer end of the shaft 15 is a clutch device of any known kind (Figs. 4 and 5) which for instance comprises, fixed on the shaft 15, a body 16 with a clutch-actuating member 17 which is rotatable therein and has an arm 18 and a sheave 19 which is turned freely on the body 16 in the direction of the arrow e, as long as the arm 18 is held by the armature 21 of the electromagnet 22.

On the electromagnet 22 attracting the armature 21, the arm 18 of the clutch actuating member 17 couples through the intermediary of a spring (not shown) the clutch actuating member 17 with the movable sheave 19, whereby the body 16, the shaft 15 and the worm 14 are put in motion. During the rotary motion of the worm 14 the worm wheel 13 causes the funnel 2 to turn through the angle α. After one revolution the body 16 comes to rest, as the arm 18 will again have engaged the armature 21 which has been released by the electromagnet 22. The moment of excitation and disconnection of the electromagnet 22 is regulated automatically through the intermediary of a contact device of a known kind, which is put in operation by the scale beam of the weighing machine.

From the above it will be seen, that the funnel 2 turns intermittently each time through the angle α, filling the receptacles with weighed-off batches of material. From the receptacles the batches of material may be discharged into a common receiving hopper (Figs. 1 and 2) or into a discharging chute 23 (Fig. 3) which acts similarly to the described funnel 2. If the packaging machine operates uniformly, the chute 23 which is turned in the same rotary sense as the funnel 2, but at a spaced interval behind the latter, must receiver the individual batches of material also uniformly from the receptacles 1, 1a, 1b, 1c . . . (Fig. 5). This motion is imparted to the chute 23 by a chain wheel 24 which rotates uniformly with the packaging machine and through the intermediary of the shaft 25, the worm 26 and the worm wheel 27 imparts its motion to the pivot pin 28, with which the chute 23 is rigidly connected by means of the holder 29.

In the position shown in Fig. 3 the upper opening of the chute 23 is below the receptacle 1h, in which position the bottom 4 of this receptacle opens. A constructional example of the device for opening and closing the bottom of the receptacles is illustrated in Figs. 6, 7 and 8.

The chute 23 (Fig. 6) moves in the direction of the arrow g with respect to the receptacle 1h, the hinged bottom 4 of which is normally held in the closed position by the latch 30. During the continued motion of the chute 23 the upper edge of the latter strikes against the latch 30, so that the receptacle bottom 4 swings into the position indicated by broken lines in Fig. 7 and the material falls out of the receptacle 1h into the chute 23. During its continued motion the chute 23 by means of the flat spring 31 lifts the bottom 4 again into its closed position, in which the latter is secured by the latch 30, which during the further motion of the chute 23 passes through the notch 32. The same procedure is repeated at the discharging of all the receptacles.

The lower end of the chute 23 may deliver the batches of material either directly to the packaging machine or on to a conveyor band 34 (Fig. 3) which travels in the direction of the arrow f.

The described arrangement is intended to enable a weighing machine to co-operate with a packaging machine. As, however, the usual weighing machines do not have such a great performance as packaging machines, one packaging machine frequently has two or more weighing machines associated with it. In this case the arrangement operating according to the described method conveys the batches of material from for instance two weighing machines to one packaging machine. As shown in Fig. 9, on a common table 35 two groups of receptacles are arranged, of which each group is served by its own chute 23a and 23b respectively, the rotary motion of which is controlled by the electromagnets 24a and 24b respectively. The receiving chutes 23a, 23b are turned through the intermediary of chain wheels 24a and 24b, the speed of revolution of which is regulated in accordance with the performance of the packaging machine. The chutes 23a and 23b alternately receive the individual batches of material, so that the conveyer bands 34a and 34b transfer the individual batches, also alternately, on to the common conveyer device 36 which passes the batches to the packaging machine.

Figs. 10 and 11 represent another constructional form of the machine according to the invention. It differs from that previously described in this, that the funnel 2c is provided with an internal conveyer band 37 which travels in the direction of the arrow h, so that the material coming from the first machine through the feed

pipe **10***a* falls on the band **37** and is carried by the latter to the discharge opening, through which it falls out in the direction of the arrow h_1 into the receptacle disposed below the opening. This arrangement is specially suitable for the conveyance of batches of a material of not such a loose or of a fibrous consistency.

Motion may be imparted to the band **37** by a belt pulley **38**, the shaft of which carries a gear wheel **39** which through the intermediary of gear wheels **40**, **41**, **42**, **43**, **44**, **45** and **46** drives one of the rollers **47** and **48**, over which the band **37** is stretched. The chute **23***c* may also be provided with a conveyer band **49** which is stretched over the rollers **54** and **55** and is driven by the wheel **41** through the intermediary of the gear wheels **50**, **51**, **52** and **53** (Fig. 10).

It is obvious that in the case, in which the described arrangement serves two machines, of which neither operates in regular time intervals, both the funnel **2** and the funnel **23** (Figs. 3, 4 and 5) must be driven in dependence on these machines, for instance through the intermediary of clutches which operate similarly to the coupling shown in Figs. 4 and 5. It is quite clear, that this clutch can be coupled with and uncoupled from the associated machines without electric current, exclusively by means of mechanical gearing.

When all the receptacles are full, the first machine must be stopped; conversely, the second machine must be stopped, when it takes the material from the receptacles at too short intervals, so that the available amount of material is insufficient. This stopping and starting is effected either by the person attending the machine or automatically through the intermediary of known electrically or mechanically operating devices.

VLADIMIR DMITRIJEVIČ POPOV.

PUBLISHED

MAY 25, 1943.

BY A. P. C.

V. D. POPOV

MEANS FOR CONVEYING MATERIAL FROM ONE MACHINE TO ANOTHER

Filed Jan. 23, 1940

Serial No. 315,260

2 Sheets-Sheet 1

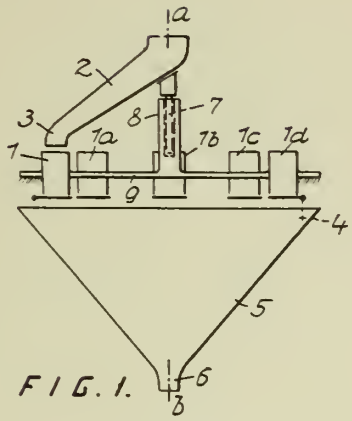

FIG. 1.

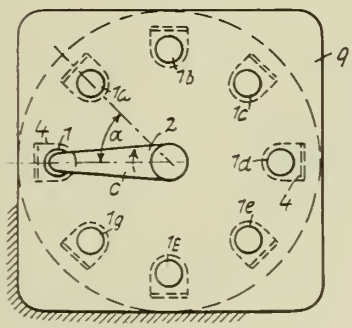

FIG. 2.

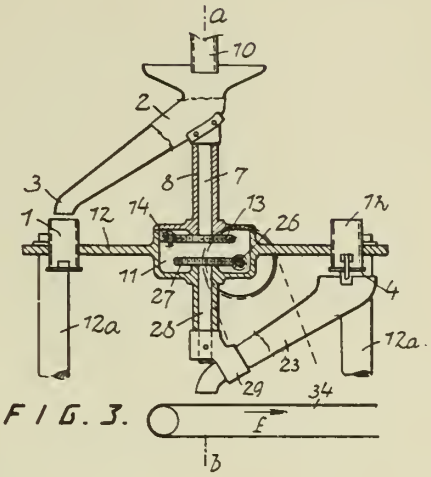

FIG. 3.

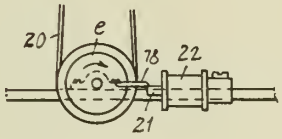

FIG. 4.

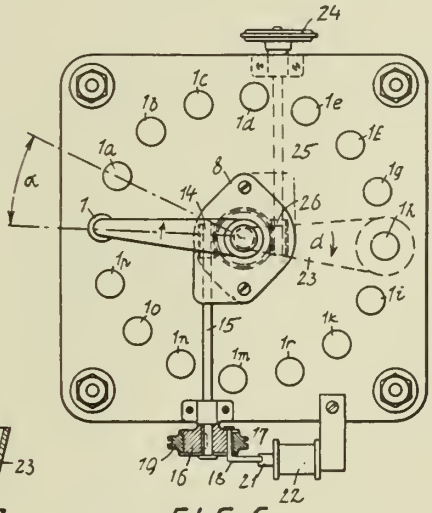

FIG. 5.

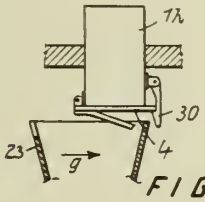

FIG. 6.

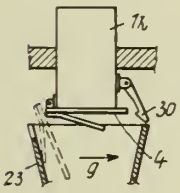

FIG. 7.

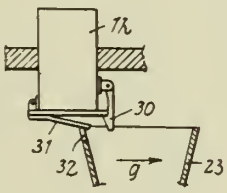

FIG. 8.

Inventor,
V. D. Popov

By: Glascock Downing & Seebold
Attys.

PUBLISHED

MAY 25, 1943.

BY A. P. C.

V. D. POPOV

MEANS FOR CONVEYING MATERIAL FROM ONE MACHINE TO ANOTHER

Filed Jan. 23, 1940

Serial No. 315,260

2 Sheets-Sheet 2

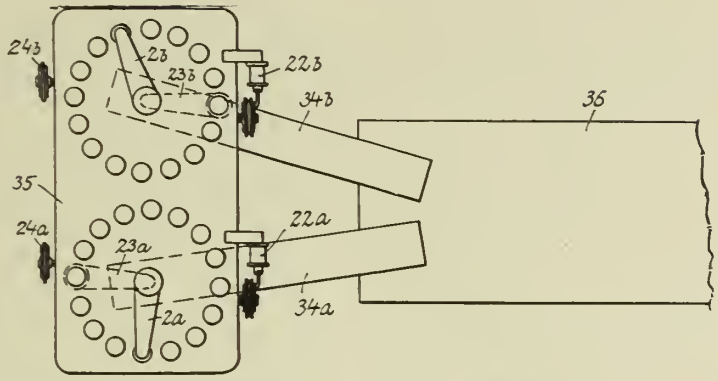

FIG. 9.

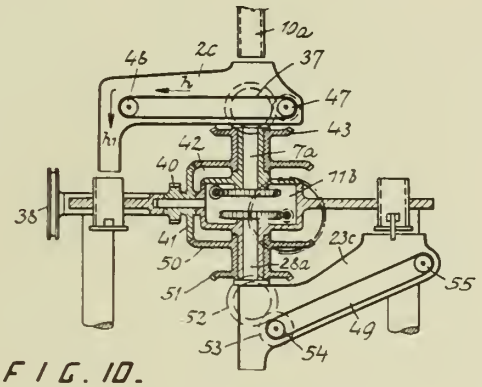

FIG. 10.

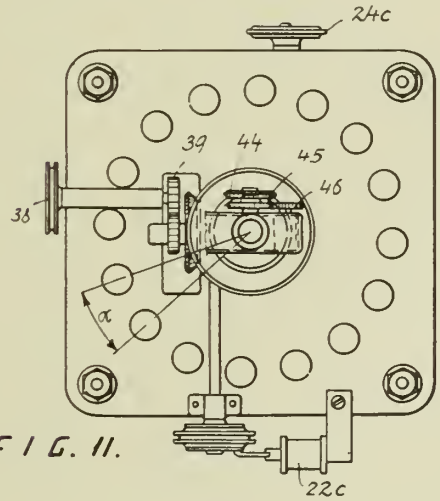

FIG. 11.

Inventor,
V. D. Popov

By: Glascock Downing & Seebold
Attys.

Published May 25, 1943

Serial No. 315,990

ALIEN PROPERTY CUSTODIAN

ADJUSTABLE BEARINGS

Theodor Wuppermann, Leverkusen-Schlebusch by Koln/Rhein, and Friedrich Koenig, Koln-Mulheim, Germany; vested in the Alien Property Custodian

Application filed January 27, 1940

Adjustable bearings, in which that portion of the bearing offering greater resistance to wear, such as a steel bush, is arranged to be stationary, whilst the bearing portion of smaller resistance comprising, for example, a bush composed of a suitable bearing material, such as bronze, bearing metal or the like and fitted on the shaft or trunnion forms the rotatable portion, have already been proposed previously—in recognition of the fact that with an arrangement of the parts in the opposite sense a possible working in of the borne portion into the supporting portion is precluded, inasmuch as this action takes place, not in the vertically downward direction but, owing to the disposal of the resultant of bearing pressure and bearing friction, in a direction obliquely downwards. In this way the wear of the bearing portion of smaller resistance is caused to be of a uniform kind, so that to enable practically complete identity to be obtained between the mathematical and the virtual axis of rotatoin it is merely necessary to provide means which permit of a subsequent adjustment.

In the known arrangements the requisite adjustment has been rendered possible by furnishing both the rotatable bronze bush, which is shrunk on to the shaft, as well as the hardened stationary bearing bush, which surounds the bronze bush, with conical bounding faces, which thus form the bearing surfaces. The adjustment is performed by displacement of the hardened bearing bush in the axial direction.

This arrangement, however, is not free from disadvantages. Each conical bearing surface leads to the occurrence of an axial thrust, which must be taken up by a separate axial retention of the mounted shaft. Although in conjunction with small bearings, such as those employed in tool machines, the axial retention is not confronted by any difficulties, these difficulties at once arise in the case of bearings of larger size, such as rolling mill bearings. To say the least the thrust bearings provided for the axial retention of the rollers are loaded to an unnecessary degree by the additional axial thrust, so that the problem arises of designing an arrangement of such a nature that a cylindrical bearing surface of the requisite kind is produced, in which unnecessary axial thrusts do not occur.

A conical bearing surface moreover has the disadvantage that the necessity for accurate adjustment is much greater than in an ordinary bearing, as if the axial adjustment is not exact, there at once occur between the supporting and the supported portions considerable differences in diameter, which greatly exceed the requisite clearance of the parts. In this way there is not only produced the usual eccentric displacement corresponding to the difference in clearance arising from wear, but in point of fact the displacement involved is greatly in excess of the degree of difference produced by the wear alone. This in the rolling mill technique is particularly disadvantageous because the quality of the rolled products depends on the extent to which it is possible to make the virtual axis of rotation coincide with the mathematical axis.

It is also to be considered that owing to the considerable difference in diameter between the supporting and supported portions of the bearing the supported portion, following the adjustment, is no longer seated to the same extent as it was previously thereto. Whereas in the usual way the wear involved results initially in a working in of the bearing, this in the case of conical bearing surfaces applies only to a limited extent, as in a bearing having conical bearing surfaces the wear which, in a bearing with cylindrical bearing surface is sought to be attained owing to the very fact of the working-in effect, represents a condition to which a re-adjustment is already required. When the requisite adjustment has been carried out the working-in effect previously attained is again eliminated, so that a bearing of this nature must of necessity always lead to a considerably greater loss of output than a bearing having a cylindrical bearing surface, in which the radial adjustment is not necessarily associated with an axial relative displacement of the supporting and supported portions.

The problems involved are solved in accordance with the invention by the fact that in an adjustable bearing, and more particularly in a rolling mill bearing, in which the portion of the bearing offering greater resistance to wear is arranged to be stationary, whilst the bearing portion of smaller resistance forms the rotatable portion, the said rotatable portion comprises a plurality of sectors, which on their outer faces contact with the hollow-cylindrical bearing surface formed by the bearing portion of greater resistance, whilst in the direction of the roller trunnion they are furnished with adjustment faces, which are disposed at an angle to the longitudinal axis of the said trunnion and by means of which they are adjustable in common to bear against the said bearing surface with the desired degree of clearance. In other words the conical surface, which heretofore has been constituted by the bearing surface, is disposed between the shaft or the trunnion and

the mounted portion firmly connected thereto. It is thus possible to vary the outer, i. e., the actual bearing surface with regard to its diameter, in which connection the separation into sectors must be accepted as a matter of necessity. This separation of the bearing surface of the mounted portion does not, however, present the least difficulty, and is as a matter of fact an advantage. Each sector can be furnished with the usual wedge form. The spaces between the sectors permit of the use of generous quantities of lubricating and cooling agents, so that a good cooling, scavenging and lubrication of the single bearing surfaces is accordingly ensured.

On the other hand, and more particularly in the case of rolling mill bearings, the separation into sectors presents certain difficulties with respect to the supply of lubricant to the bearing, so far as the sectors are produced from the usual bearing materials, such as bronze, bearing metal and the like. The arrangement in question necessitates the accommodation of the rotatable portion of the bearing, i. e., the portion of the bearing which is composed of the sectors, in a hollow-cylindrical steel bush, the inner face of which forms the bearing surface. To lubricate properly a bearing of this character the lubrication must be performed by a scavenging action, that is to say, the lubricant must be supplied in such an amount that there is not only produced the requisite lubricating film, but there is also obtained a cooling effect.

In other words the amount of the lubricant must be such that the heat generated in the bearing is discharged by the excess of lubricant. The problem accordingly arises of designing the spaces between the single sectors in such a way that they act as passages for the lubricant. If the lubricant consists of an oil or fat, difficulties are encountered in obtaining a proper sealing, as the lubricant must be supplied in excess from a stationary reservoir or fixed connection to the rotating intermediate spaces. These difficulties are particularly accentuated in the case of rolling mill bearings owing to the fact that the material being rolled has been raised to a high temperature, and splashes of lubricant may be flung on to the material and caused to be ignited, resulting in a burning or flaming of the lubricant with all the accompanying detrimental effects.

In its additional development the invention, for the purpose of overcoming the difficulties aforesaid, is based on the well known characteristic of synthetic resin bearings consisting in the fact that the lubrication of these bearings can be performed in a fully satisfactory manner by means of water. This characteristic can be utilised to permit of the adaptation of the desired form of bearing to rolling mills, since irrespective of the manner in which the water acting as lubricant and cooling agent may be supplied to the surface of the bearing there is obtained the advantage that a splashing or spraying about of the water will not lead to any difficulty whatsoever, whilst on the other hand the introduction of the lubricant is also facilitated by the fact that the water can be supplied, for example simply by spraying it into the spaces between the sectors, without the least consideration to adequacy or otherwise of the sealing of the parts.

It is true that the said characteristic of synthetic resin bearings is already known per se, but heretofore this property has merely been utilised in consequence of the use in certain countries of raw materials available on the home market, which accordingly have the advantage of particular economy. On the other hand the said characteristic as applied to the principles forming the basis of the present invention permits for the first time of the use of bearings of a design which it has not been possible to utilise heretofore in the rolling mill technique owing to the fact that it has not been possible to solve the problems attendant on the lubrication of bearing materials of the ordinary kind.

Adjustable bearings designed in accordance with the invention, and more particularly rolling mill bearings, wherein the portion of the bearing offering greater resistance to wear is arranged to be stationary, whilst the bearing portion of smaller resistance forms the rotatable portion, are accordingly further characterized by the fact that the said rotatable portion, which preferably comprises a plurality of sectors, which on their outer faces contact with the hollow-cylindrical bearing surface formed by the bearing portion of greater resistance, whilst in the direction of the roller trunnion they are furnished with adjustment faces, which are disposed at an angle to the longitudinal axis of the said trunnion and by means of which they are adjustable in common to bear against the said bearing surface with the desired degree of clearance, is composed of synthetic resin.

Heretofore a particular advantage of synthetic resin bearings has been considered to reside in the fact that the water, which has been used quite generally for cooling and lubricating purposes, could be supplied to the bearing in practically uncontrolled fashion, for example could be applied to the surface of the bearing by way of a hose or the like. Particular importance has been attached to a simple and robust design of this nature, more particularly for rolling mill purposes, because in this way all complicated equipment, return cooling apparatus for the lubricant, pipes, pumps and control elements are rendered superfluous.

In comparison therewith it has been appreciated in the further development of the general idea constituting the basis of the invention that without departing from the fundamentally simple design of a synthetic resin bearing of the character in question there can be realised by a controlled guiding of the water which is employed as lubricant and cooling agent appreciable advantages, which take effect in a considerable reduction of the friction and the wear, with consequent prolongation of the life of the bearing, in a more exact adjustment of the mounted parts, and accordingly an increased accuracy in the rolling operation, and finally in a reduced consumption of the lubricating and cooling agent.

On the basis of these considerations adjustable bearings in accordance with the invention, and more particularly rolling mill bearings, wherein the portion of the bearing offering greater resistance to wear is arranged to be stationary, whilst the bearing portion of smaller resistance forms the rotatable portion and preferably comprises a plurality of segments, which on their outer faces contact with the hollow-cylindrical bearing surface formed by the bearing portion of greater resistance, whilst in the direction of the roller trunnion they are furnished with adjustment faces, which are disposed at an angle to the longitudinal axis of the said trunnion and by means of which they are adjustable in common to bear against the

said bearing surface with the desired degree of clearance, are additionally characterised by the fact that in the stationary and rotatable portions of the bearing there are provided in a definite location spaces or recesses in the form of passages, borings, ducts or the like, so that there is imparted to the cooling and lubricating agent by the parts of the bearing to be cooled and lubricated a guiding action of a positive nature which is predetermined by the disposal of the recesses or the like. If the rotatable portion of the bearing is composed of synthetic resin segments, the spaces between the rotating segments can be made to form part of the series of recesses, whereby the possibility is arrived at of causing the lubricating and cooling action to proceed from these spaces, so that a proper delivery of lubricant to the faces to be cooled and lubricated is definitely ensured. In order to make provision for an even supply of lubricant to the spaces between the segments there can be provided in a portion surrounding the segments, for example in the bearing box or casing, annular recesses, which are preferably disposed concentrically to the longitudinal axis of the mounted trunnion and communicate with the said spaces, so that the cooling and lubricating agent is distributed evenly to the complete number of spaces between the single segments.

If the portion of the bearing surrounding the segments, for example the bearing casing, is composed of sectors, between which there are provided radially disposed passages which connect up the annular recesses serving to receive the cooling and lubricating agent and to distribute it to the separate segments, the end faces of the sectors can be designed as a seat to accommodate an axial thrust bearing, the cooling and lubrication of which can thus be simplified in a manner which will be described later.

If the outlet openings for the cooling and lubricating agent are smaller in cross-section than the passages for the same which, in the direction of flow, precede the said outlet openings, the cooling and lubricating agent, owing to the increase of pressure, will completely fill out the passages. In this way there is obtained a comparatively high rate of flow, and accordingly an appreciable transfer of heat, so that the bearing remains cool and in consequence thereof is in a condition to withstand much greater bearing pressures than those which heretofore have been considered to constitute the safety limit.

The problem which has been set forth above with respect to the portions of the bearing taking over the radially directed load also occurs to a similar degree in the case of axial thrust bearings, inasmuch as in numerous instances a bearing which is adapted to receive the radial load must be used in common with an axial thrust bearing. The additional problem which consequently arises and consists in making the parts, which receive the axial bearing pressure, of synthetic resin and in providing for an adequate lubricating, cooling and scavenging action is accordingly solved according to the invention by the provision of segments between the supporting and supported portions of the bearing, the said segments taking over the axial pressure and being secured in a suitable holding means. The holding means for the segments preferably comprises a surrounding ring. A form of axial thrust bearing which is particularly simple in design and reliable in operation can be obtained by furnishing the said ring with recesses, into which the synthetic resin segments are then plugged. If, for example, these recesses are provided with a trapezoidal cross-section, they may be allowed to open out on to the inner bounding face of the supporting ring in such a way that the smaller of the two parallel edges of each trapezium coincides with the said bounding face. In this manner there are produced in the supporting ring undercut openings of dovetail form which, provided the held portions of the synthetic resin segments are furnished with a cross-section corresponding to that of the trapezoidal recesses, will ensure that the said segments will be maintained in their proper peripheral disposal, notwithstanding the fact that they are self-adjustable axially. On the other hand it would appear desirable to secure the segments at least in the one axial direction, and preferably in the direction of the bearing surface. This can be carried out, for example, by furnishing the segments with a collar-like abutment, which limits the movability of the segments with respect to the supporting ring in the direction towards the bearing surface. The collar-like abutments can be accommodated in such a way in an annular groove in the supporting ring that the bounding face of the said supporting ring is disposed in a plane with the bounding faces of the segments when the latter are in a position with respect to the ring in which the abutments are effective. In this manner the supporting rings and the segments can be made to bear against the same seat, so that an extremely accurate assembly of the supporting ring and the segments can be arrived at.

It has already been stated that a particularly convenient form of lubrication and cooling of the axial thrust bearing can be obtained by designing the connections between the annular recesses, which receive the cooling and lubricating agent and distribute it over the various segments, in the form of passages having intervening sectors, the end faces of which constitute a supporting surface for the said thrust bearing. If the walls confining the annular recesses for distributing the cooling and lubricating agent are formed in part by the bounding faces of the segment-supporting ring, which is disposed between the stationary and rotatable portions of the bearing in such a way that it receives the axial pressure by way of the segments, the cooling and lubricating agent will find a steady access to the bearing faces formed by the segments. The supply of the cooling and lubricating agent to the axial thrust bearing composed of the said segments can be improved by furnishing the supporting ring with recesses, which are preferably disposed between the segments and by way of which the cooling and lubricating agent, which is passed to the annular recess bounded in part by the supporting ring for the purpose of distribution over the segments, is caused to emerge in even distribution about the entire periphery of the axial thrust bearing and thus to exert the requisite cooling and lubricating action.

At the same time the portion of the bearing surrounding the segments, for example the bearing casing, forms sectors, the end faces of which act as a seat for the segments or the supporting ring, so that the axial pressure received by the segments is transmitted to the stationary bearing portions and discharged without any loading

of the supporting ring itself, so that this ring is not required to take over any forces but merely to secure the segments against a variation in their position.

It is naturally also possible within the meaning of the invention to provide means the axial thrust bearing can be subjected to any desired adjustment later. Thus, for example, it is possible to provide for adjustment of the bounding surface of the seat adapted to support the ring and the segments by making the said seat adjustable in the axial direction. This, however, in no way affects the fundamental design of the supporting ring and the embodiment and arrangement of the segments, so that the above remarks apply literally to bearings which are intended for a subsequent adjustment.

The invention is illustrated by way of example in the accompanying drawings in its application to a rolling mill bearing.

Fig. 1 is a longitudinal section through the bearing and the roller trunnion, whilst

Fig. 2 is a cross-section taken on the line II—II in Fig. 1, and

Fig. 3 is a cross-section taken on the line III—III in Fig. 1.

Fig. 4 is a longitudinal section through a modified embodiment of the bearing, whilst

Fig. 5 is a cross-section through the embodiment according to Fig. 4.

Fig. 6 is a plan view of the supporting ring, from which the synthetic resin segments have been omitted.

Fig. 7 is a cross-section taken on the line VII—VII in Fig. 6.

Fig. 8 is a cross-section through a synthetic resin segment taken on the line VIII—VIII in Fig. 9, whilst

Fig. 9 is a plan view of a segment.

In the drawings 1 is a roller and 2 the roller trunnion, which possesses at 3 an abutment of reduced diameter and at 4 a collar. The trunnion 2 is of conical form. On to this trunnion there is shrunk a steel bush 5, which is likewise conical on its outer periphery, and the cross-sectional form of which is disclosed by Fig. 2. The bush 5 is furnished with ribs 5′, which are also conical. Between the ribs there are thus formed recesses, in which there are accommodated segments 6 composed of synthetic resin. The segments 6 possess in their entirety a cylindrical outer face, along which they contact with a hollow-cylindrical bearing surface 7, which is formed by a bearing bush 8 preferably composed of steel. The bearing bush 8 is situated within a casing or fitting 9. On the trunnion portion 3 of reduced diameter there is provided a threaded ring 10, which comprises a plurality of parts held together by a split ring 11. On the external thread of the ring 10 a nut 12 is so mounted that the end faces 6′ of all synthetic resin segments 6 are caused to bear against the face of the nut directed towards the roller 1.

It is accordingly merely necessary to turn the nut 12 on the threaded ring 10 for the purpose of varying the axial position of the synthetic resin segments 6 as desired. Owing to the conical form of the bush 5 an axial displacement of the segments 6 also causes them to be moved in the radial direction, so that in this way they can be readily adapted to the hollow-cylindrical bearing surface 7 of the stationary bearing portion 8. The segments 6 rotate together with the bush 5, and at the same time they can be adapted to the part 8 collectively and in common. The adjusted position of the threaded ring 10, and accordingly the axial and radial position of the segments, is secured by a bolt 13.

For a proper guiding of the cooling and lubricating agent the means provided as as follows:

In the fitting or bearing casing 9 there are provided borings 15, which communicate with a water supply source 16. The borings 15 open out into an annular recess 17 in the casing 9. Radially inwards the annular recess 17 is confined by sectors 18, which are formed by the casing 9 and are so disposed that intermediately of the same there are located radial passages 19, by way of which the cooling and lubricating agent can be conducted to a second annular recess 20 in the casing or fitting 9. With the annular recess 20 there communicate the spaces 14 disposed intermediately of the segments 6, the complete arrangement resulting in a definite disposal of the recesses 15, 17, 19, 20 and 14, by way of which there is imparted to the cooling and lubricating agent by the parts to be cooled and lubricated a definite guiding action, which is predetermined by the particular arrangement of the recesses.

The lubricant is passed out between the separate segments and can then be discharged in any suitable manner, for example by means of an intercepting container 21 and drain 22.

For the purpose of obtaining an analogous guiding of the cooling and lubricating agent also with respect to the axial thrust bearing additional means are provided as follows:

A ring 23 provided in the fitting 9 possesses towards the enlarged abutment 24 of the roller trunnion dovetail recesses 25, in which there are fitted segments 26 composed of synthetic resin. These segments bear with their end faces directed towards the roller 1 against the collar formed between the roller 1 and the flared portion 24, whilst on the other hand they are also supported against the end faces of the sectors 18 of the fitting 9. A collar 27 on each segment 26 prevents the segments from falling out. In this way the end face 28 of the ring 23 and the end faces of the segments 26, 27 bound the annular space 17 and the passages 19, so that the cooling and lubricating agent conducted through these passages is enabled to obtain access to the segments 26, 27. This effect can be enhanced by furnishing the ring 23 between the segments 26, 27 with borings 29, by way of which the cooling and lubricating agent flowing through the passages 17, 19 is able to pass in direct fashion to the axial thrust bearing surface formed between the segments 26 and the roller 1. There is thus obtained with respect to the cooling and lubricating agent which is supplied to the axial thrust bearing a definite sequence of supply passages in the form of the recesses 15, 17, 19 and 29.

As shown by the drawings, the cross-section of the passages 14, which is to be regarded as the outlet cross-section for the lubricant, is smaller than the cross-section of the passages which, in the direction of flow of the lubricant and cooling agent, precede the outlet cross-section, so that owing to the increase in pressure all of the passages are completely filled out by the lubricating and cooling agent. In this way there is ensured a steady and even supply of lubricating and cooling agent to the bearing surface 7 between the parts 6 and 8.

In order to prevent the cooling and lubricating agent from emerging between the flanged abutment 24 and the supporting ring there is pro-

vided a shaft packing 30 of the conventional kind, which forms an effective seal at this point.

A modified embodiment of the bearing is illustrated in Figs. 4 and 5.

In this case the roller 1 is also furnished with a conical trunnion 2. On to the trunnion 2 there is shrunk a bush 5 composed of forged steel or the like, which is also secured against axial displacement by means of a multi-part split ring 31. On its outer face, which is also of conical form, the steel bush 5 is furnished with ribs 5'. In the groove-like recesses formed intermediately of the said ribs there are arranged so as to be longitudinally shiftable trough-shaped segments 6 composed of a bearing material offering less resistance to wear, for example bearing metal or synthetic resin. The segments 6 again form on their inner faces a conical surface corresponding to the outer face of the steel bush 5. Their outer faces on the other hand form a cylindrical surface.

Towards the end face of the shaft trunnion the segments 6 are made to project in collar-like fashion, and with the collar thus formed they serve to support the multi-part ring 31, so that special precautions for maintaining the assembly are thus rendered unnecessary.

The face opposite the outer faces of the segments is formed by a hollow-cylindrical recess in the steel bush 8. The slip surface directed towards the segments 6 can be subjected to a suitable metallurgical treatment for the purpose of reducing the friction, for example may be burnished, chromium plated, nitrated or otherwise preliminarily treated. The outer portion of the bush 8 is designed to form a flange 32, through which there are passed screws 33, the threaded portions of which are received by the casing or fitting 9. The flange 32 bears with an internal annular abutment against a corresponding shoulder on the segments 6, so that these segments can be adapted similarly and collectively to the bearing surface formed by the bearing portion 8. Any adjustment thus made does not vary the axial position of the segments 6 with respect to the bush 8, so that any working in of the bearing which has taken place in the meantime is not destroyed in consequence of the adjustment. The casing 9 is held in the rolling mill frame (not shown) by any suitable means, such as threaded members 34.

Immediately the effects of wear make themselves apparent the segments 6 can be adjusted accordingly, similarly and in common, by tightening the screws 33. The segments 6 are then caused to slide upwards along the outer conical wall of the bush 5, whereby the diameter of their outer circle is at the same time increased. In this way the bearing can be adjusted to the desired degree. In consequence the position of the trunnion 2 can be continuously maintained, that is to say, the virtual axis of rotation can be made to agree as near as possible with the mathematical axis.

The means provided to receive the axial thrust are as follows: In the casing or fitting 9, which for this purpose is furnished with a special annular abutment 35, there is located a ring 36 having fitted therein a series of segments or plugs 37, which may consist of synthetic resin or also any other bearing material. The end faces of the plugs or segments 37 bear against the roller 1, or against the surface of a special collar provided thereon, so that in this way the axial thrust can be transmitted by way of the plugs or segments 37 to the casing 9. The plugs or segments can naturally also be furnished with adjustment means for the purpose of adjusting the axial play.

The passages 14 situated between the sectors 6 are preferably designed as passage ways for the cooling and lubricating agent, which is raised to an increased pressure and, in the event of the plugs or segments 37 consisting of synthetic resin, will be water. It is naturally also possible to provide borings in the sectors 6, or to furnish other means for supplying a lubricating and cooling or scavenging agent to the bearing surface.

As a modification of the embodiment according to Figs. 4 and 5 the arrangement can also be such that the bush 8 for the purpose of the adjustment is not forced into the casing 9, but is drawn out of the same. In place of the single-part bush 8 there can be used a series of trough-shaped sectors, which can be adjusted singly or in common, in which case naturally an adjustability of the rotating sectors can be dispensed with.

The sectors can also be arranged to be adjustable by way of inclined faces for the purpose of maintaining the clearance of the bearing at the desired minimum. Alternatively there can be provided between the sectors 6 and the inner bush 5 wedge-shaped members, which can be moved axially for the purpose of adjusting the slip faces.

Figs. 6 and 7 are plan and cross-sectional views respectively showing the supporting ring 23 for the segments 26, details of the segments themselves being shown in Figs. 8 and 9.

In Figs. 6 and 7 the supporting ring is designated 23. This ring possesses on its inner bounding face 38 openings 25 of trapezoidal cross-section. The arrangement is such that the smaller of the two parallel edges 25'' and 25''' of the trapezium, i. e., the edge 25''', coincides with the inner bounding face, so that dovetail undercut recesses 25 are formed, in which an element of the same cross-sectional form is protected against displacement by the fact that the bounding faces 25' of the recess 25 act as a seating. The ring 23 possesses an annular groove at 39. Between the trapezoidal openings 25 there are provided additional recesses 29 in the form of borings, which are enlarged conically at 29'. In the vicinity of the supporting ring at 40 the trapezoidal openings 25 are omitted, as at this point they can be dispensed with. In consequence the height of the bearing can be reduced accordingly.

Figs. 8 and 9 show the form of the synthetic resin segments fitted in the trapezoidal recesses 25 and receiving the axial load of the bearing. The synthetic resin segments include a plug-like portion 26 having a trapezoidal cross-section agreeing with the form of the recesses 25. The end faces 26'' of the segments 26 form the axial pressure surface in conjunction with the mounted element. On the plug-like bases 26 of the segments there are provided collar portions 26', which are accommodated in the annular groove 39. In this way the segments are prevented from falling out of the supporting ring 23 in the direction towards the bearing surface of the axial thrust bearing.

THEODOR WUPPERMANN.
FRIEDRICH KOENIG.

PUBLISHED

MAY 25, 1943.

BY A. P. C.

T. WUPPERMANN ET AL

ADJUSTABLE BEARINGS

Filed Jan. 27, 1940

Serial No.

315,990

2 Sheets-Sheet 1

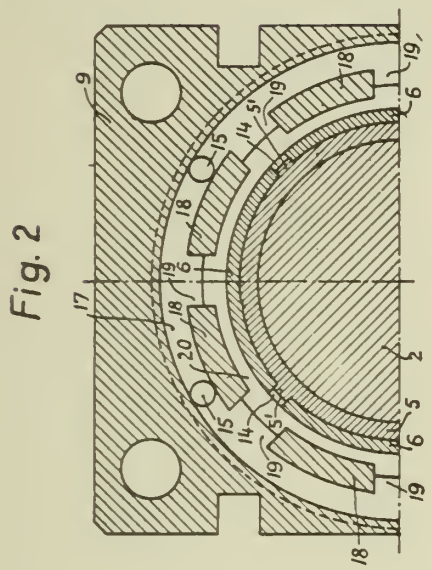

Fig. 2

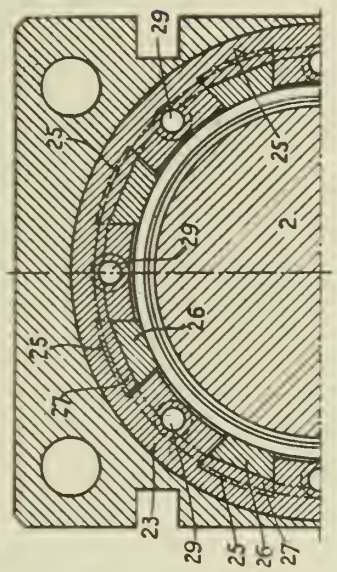

Fig. 3

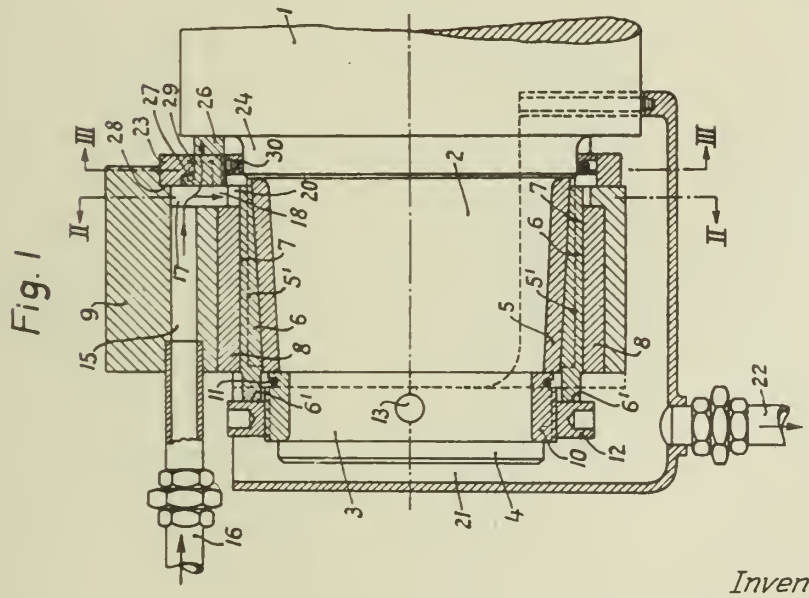

Fig. 1

Inventors:

Theodor Wuppermann

Friedrich Kücing

PUBLISHED
MAY 25, 1943.
BY A. P. C.

T. WUPPERMANN ET AL
ADJUSTABLE BEARINGS
Filed Jan. 27, 1940

Serial No.
315,990
2 Sheets-Sheet 2

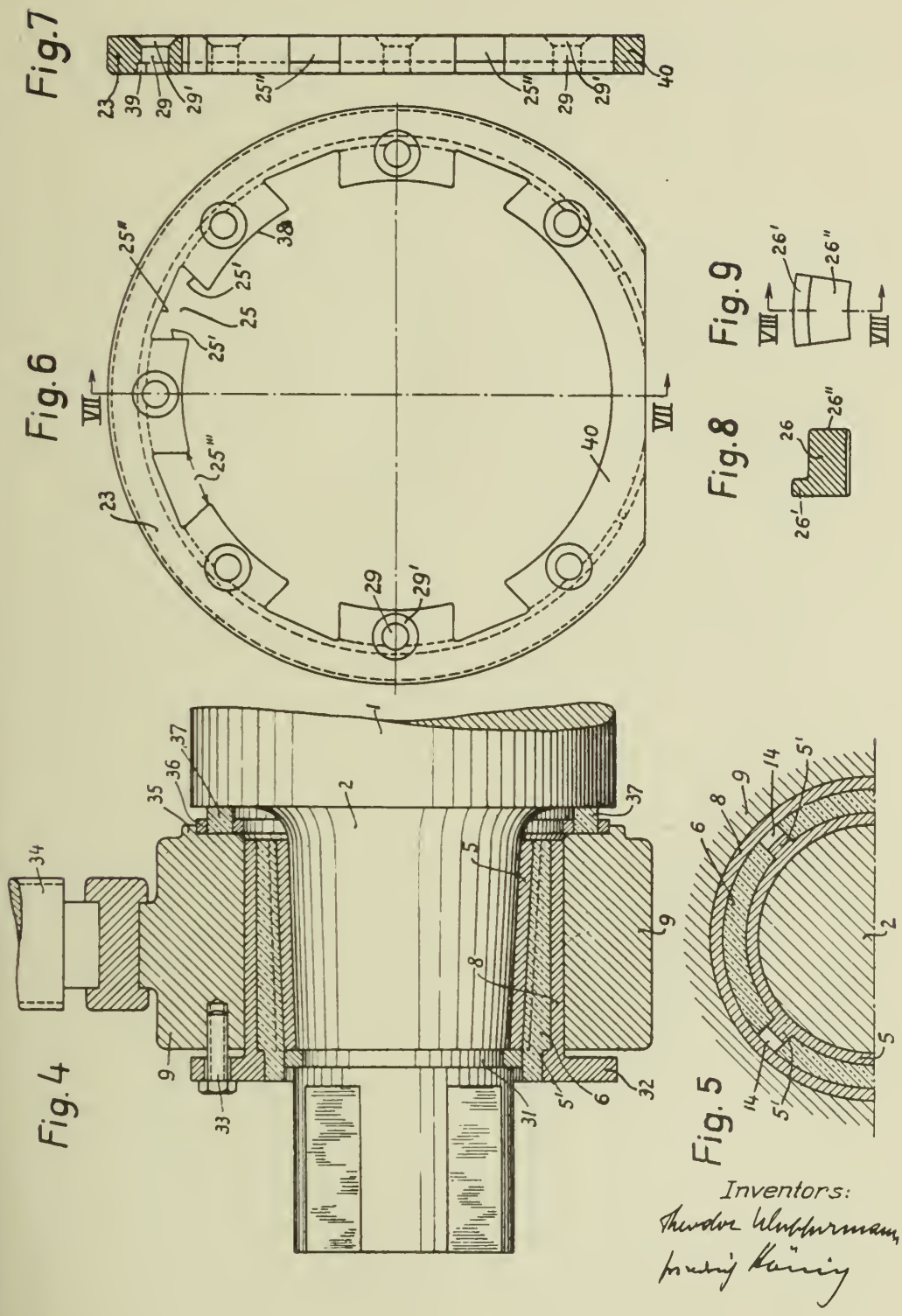

Inventors:
Theodor Wuppermann,
Ludwig Hüning

Published May 25, 1943

Serial No. 316,824

ALIEN PROPERTY CUSTODIAN

CALCULATING MACHINE

Félix Pappé, Paris, France; vested in the Alien Property Custodian

Application filed February 1, 1940

Accountancy and statistics necessitate machines capable of recording and grouping payments under numerous headings and/or in different accounts. Adding machines now in use occupy much too much space to make them suitable for practical purposes. Recording machines are also known which have the disadvantage of necessitating the employment of additional calculating machines into which the payments recorded have to be transferred for the purpose of such further operations as might be necessary. Statistical machines are likewise known which are designed on the principle of perforated cards, but require numerous previous mechanical operations before they can give results that are finally utilisable. Moreover, their cost price and their high selling price brings them within the reach of large concerns only.

This invention relates to a calculating machine of simple construction which is capable of algebraically adding various elements in different accounts. These different elements may be grouped in several sections of the machine in such manner as to be grouped, if necessary, under different or similar headings belonging to the same section or to different sections of the machine. The principle of the calculating machine, according to this invention, is based on the use of calculating tables (abacus) well known in arithmetical problems. It is known that in such tables a certain number of calculating elements (ten, for instance, when operations are made according to the decimal system) are grouped in rows, the number of such rows being proportional to the number of the "categories or ranks of numeration", which it is intended should come in the calculations. In these known devices the calculation elements are displaced by hand in a number equal to the number corresponding to the data of the problem. So soon as a row of elements is entirely displaced, it is brought back to its initial position and an element of the immediately higher row is brought forward. These arrangements are obviously too cumbersome to be used in practice in statistical and accountacy calculations.

According to this invention a calculating machine has been evolved which comprises calculating tables, said machine being characterised by calculation elements, transfer elements and printing elements to record corrections, and particularly by the following features taken together or separately:

(1) Mechanical means effecting automatically and simultaneously, with the aid of an electric or other motor, all the forward and backward movements of all the calculation elements contained in all the rows of a calculating table;

(2) Mechanical means ensuring the co-ordination or combination of any kind of several calculating tables in several sections of the machine;

Mechanical means serving to operate the algebraical addition of the quantities represented by calculating tables in another calculating table set in another section of the machine;

(3) Mechanical means serving to record or print on sheets or strips of paper the data of the problems, the results and the transfers made from one section of the machine to another.

Each calculating table represents an "account" or "item". The calculating tables are horizontally superimposed in the frame of the machine. The calculation elements of each row in each calculating table are represented by pegs provided in rods or reglets, the number of such pegs being equal to the basis (less one) of numeration adopted (9 for the decimal system, 11 and 19 for the system based on pence and shillings etc.).

The reglets are normally stationary in the frame of the calculating table but, by means of fingers, each calculating table can be slightly displaced and cause the unlocking and functioning of the reglets, that is to say, of the calculation elements. This operation results in forward and backward movements, in the longitudinal direction of said reglets. Each calculating table comprises a reglet for each category of numeration.

The forward and backward movements of the reglets are controlled by square members, the vertical edges of which can engage the pegs of the reglets when the latter are unlocked. There is one square member for each category of numeration. If it is desired, for instance, to calculate up to a maximum 1999 (in the decimal system) three square members are necessary.

The horizontal edges of the square members slide on guides fixed on the frame of the machine.

The square members are horizontally influenced by retracting springs in the direction of the recession of the reglets, but they may nevertheless be drawn in the forward direction against the action of the retracting springs by means of operating bars with which they are engaged.

The operating bars are guided in the frame of the machine; they slide horizontally and parallel with the horizontal edges of the square members. These bars are, in their turn, operated by operating springs of greater power than the

power of the retracting springs of the square members and they are brought back to their starting position by a strap operated by hand or by a motor of any kind.

The movement of the operating bars is limited by stop bars which are themselves stopped by the rods of a key-board bearing the figures or signed for marking so that the movement of the operating bars is limited in accordance with the inscriptions marked on the key-board.

The stop bars are always in engagement with the operating bars; they therefore go forward and backward simultaneously and longitudinally to the same extent. They can also move transversely without departing from their parallelism with the operating bars. The stop bars are guided and slide on guides fixed in the frame of the machine.

The stop bars comprise two rows of stops (one for adding and the other for subtracting) arranged in such a manner that the length of the forward movement allowed by a subtraction stop is equal to the completion at 9 (decimal system) of the forward length allowed by the corresponding addition stop.

The engagement of the square members and the operating bars is produced by a system of rods comprising the following essential mechanical elements: an operating lever, a hooking pawl, an operating stop for carrying forward and a releasing pawl.

The operating lever is fixed by a pivot on the operating bar. Said lever comprises two perpendicular arms of equal length. One of said arms occupies normally a horizontal position and carries a roller which rolls on the carrying forward guide corresponding to the preceding category of numeration immediately below.

The hooking pawl is pivoted on the vertical arm of the operating lever and carries a roller which rolls on the carrying forward guide corresponding to its numeration category, whilst pressing from underneath. The operating spring is hooked at a point of the pawl between its point of rotation and that of the roller. The hooking pawl comprises a nose which engages the square member in order to operate it in the forward movement of the operating bar.

The operating stop is fixed on the square member and located in such manner that, if the hooking pawl releases the square member with which it becomes engaged, the square member operated by its spring is struck by its operating stop, gliding first along a distance equal to the length to which are added as many calculation elements as there are units in the system of numeration adopted as, for instance, 10 in the decimal system, 20 for the shillings, 12 for the pence, and so forth.

The carrying forward bar is guided in such a manner in the frame of the machine that it is capable of moving upwards along a determined distance, whilst remaining parallel to itself, that is to say, that it can go up to its stop without ever losing its horizontal position.

The carrying forward bar is maintained in its normal position by a releasing pawl. So long as the carrying forward bar is maintained in its normal position, it will maintain also in their normal position in height the operating levers and the hooking pawl, whatever may be the position of these elements.

On the other hand, so soon as the carrying forward bar is released by the releasing pawl, it can rise parallel to itself and the horizontal arm of the operating lever rises likewise. Due to this movement, the vertical arm progresses to the same extent. The position of the stop, in order to limit the upward movement of the carrying forward bar, is such that the forward movement of the vertical arm of the operating lever relatively to the operating bar shall be equal to a calculation element.

The releasing pawl consists of a shaft eccentrically pivoted in the vertical direction in the frame of the machine and located in such a manner that, when one reglet has moved a distance exceeding the added length of all its calculation elements, that is, the length reduced by the length of an element, such reglet strikes against the shaft which, owing to its eccentricity, then rotates sufficiently to disengage the carrying forward bar.

Each section of the machine comprises a transfer bar.

The transfer bars are guided in the frame of the machine in such a manner as to be capable of performing a longitudinal movement. They are located in such a manner that, when such movement has been imparted to them, they block all the releasing pawls corresponding to the section of the machine to which they belong.

When the pawls are blocked, the carrying forward bar cannot become disengaged, even if the reglets reach their extreme forward position and, consequently, the hooking pawl maintains the engagement between the operation bar and the square member, and the latter with the corresponding reglet will not be subjected to any backward movement.

The controlling device which causes the movement of the transfer bar unblocks the key-board so that no stop bar can be stopped by the key-board. The stop bars, and together with them the operating bars, stop only when the reglet which is engaged with the square member strikes against the releasing shaft, that is to say when they reach their extreme forward position.

The operating bars are sufficiently long to be able to engage several square members by means of a hooking device similar to that above described. The vertical edges of these square members can engage the calculation elements of other calculating tables co-ordinated in the other sections of the machine. The forward movements of the operating bars cause forward or backward movements in these square members always in function of the position of the calculation elements with which they are engaged.

As the operating bars advance a distance equal to the displacement of the unlocked reglets and rows in the calculating table of the section, the releasing shafts of which have been blocked, the accumulated or recorded amounts in this calculating table are transferred to the calculation elements of the unlocked calculation table of the other sections of the machine, the releasing shafts of which have not been blocked.

The printing elements consist, for instance, of sectors mounted on the frame of the machine in such a manner as to be capable of sliding vertically, that is to say, perpendicularly to the movement of the stop bars. They are drawn upwards by springs and they are brought back to their extreme lower position by a strap. A printing sector is associated with each stop bar.

Each stop bar comprises two printing ramps of such form that, at each forward position of the stop bar, said ramps present two lower edges at two different heights for each forward position.

These ramps are cut out in such a manner that, in the intersection plane with the corresponding printing sector, the sum of the heights or levels of the two lower edges starting from the extreme height of the ramp is always proportional to the basis of numeration adopted.

A printing sector slides between these two ramps. The printing sectors comprise two hooks which can become hooked alternately to one or the other edge of the ramp according to the lateral position of the corresponding stop bar.

When the printing strap rises and permits the printing sectors drawn by their printing spring to rise, the printing sectors stop at a height corresponding to the forward position of the stop bars, inasmuch as they are hooked by one or the other of the printing ramps.

Each printing sector forms an integral part of a bar of printing characters the spacing of which corresponds to the rise of the printing ramps so as to present before the printing line of a printing element (a cylinder for instance) the character corresponding to the representative figure of the forward position of the stop bar.

It has been observed above that this forward position corresponds to the case where the releasing shafts are not blocked. On the other hand, when the releasing shafts are blocked, this forward position corresponds to the position of the calculation elements formed in a row and the unlocked calculating table, that is to say, to the results of the accumulation due to the previous calculation operations.

The accompanying drawings show, by way of non-limitative example, the embodiment of a calculating machine according to the invention. This machine comprises two sections and is designed to operate according to the decimal system.

In the drawings:

Figure 1 is a longitudinal section in elevation of the frame of the machine.

Figure 2 is a plan view of a section showing a calculating table, the frames of the structure being supposed removed.

Figure 3 represents a plan view of an operating bar.

Figure 4 represents a plan view of the coupling of a section of calculating elements.

Figure 5 is an elevation of the coupling mechanism.

Figure 6 represents the operating elements of the coupling mechanism.

Figure 7 is a plan view of the calculating elements.

Figure 8 is a lateral view of the calculating mechanism and of the key-board, the left-hand side wall being supposed to be removed.

Figure 9 is a section of an element of the key-board shown in Figure 8.

Figure 10 represents the locking device of the key-board.

Figure 11 is an elevation of the controlling mechanism.

Figure 12 represents the controlling rods of the carrier.

Figure 13 shows the mechanism of the straps.

Figure 14 shows a plan of a part of Figure 13.

Figure 15 affords a side view of the disengaging members.

Figure 16 is a side elevation of the engaging members and of the keys controlling them.

Figure 17 shows a side view of the printing device, the left-hand side being removed.

Figure 18 is a partial elevation of the device shown in Figure 17.

Figure 19 shows the detail of connection for the hammer pawls.

Figure 20 is a side elevation of the controlling members, the left side plate being removed.

Figure 21 is an elevation showing the general arrangement of the carrying cams.

As shown in the drawings, the machine in accordance with the present invention has two sides, i. e. a right side 1 and a left side 2 (the latter is not shown) joined by cross pieces 3, a carriage bar 4, two stop bars 5 and 6, two key rods 7 and 8, one quadrant bar 9, one motor member 10, two counting frames 11, 12 and 13, 14 respectively.

Arranged between the bars 9 and 10 are a cam plate 15 and a printing plate 16, whilst mounted between the bars 4 and 8 are two printing plates 17 and 18.

The machine rests on four legs 19 fixed to the side plates 1 and 2.

The various calculating tables consist of a frame 20 (see Figures 2, 4, 5 and 6) whose longitudinal sides are provided with notches 21 acting as guides for slides 22. The rims of the frames 20 enter grooves 23 provided in supports 24; one end of these supports 24 is secured on the one hand to the counting frames 11 and 12 and, on the other hand, to the counting frames 13 and 14, the other end being brought on to base plates 25. This arrangement allows the calculating tables to slide in a longitudinal direction. One of the transverse edges of each table 20 is formed as a nose 26 which may be moved by teeth 27 of an engaging shaft or column 28.

Each of the slides 22 has nine notation notches 50 on one of its sides 2 and on the other side nine notches or stop notches 30. Moreover, on the side of the notches 50, the slides 22 are provided with a notch 71.

To one of the ends of the counting frames 11 to 14 and of the base plates 25 respectively are fixed stop bars 29: these bars are able to stop the slides 22 in any position whatsoever by engaging one of the stop notches 30. Stop springs 31 are mounted in such a manner as to draw the tables 20 towards the stop bars 29 and keep the slides 22 in the locked position.

Each section of the machine comprises a shaft or engaging member 28 provided with teeth 27; the members 28 are mounted on levers 32 and 33 (see Figures 2, 5 and 6) fast with a shaft 34 rotating in bearings fixed to the frame of the counter 11 to 13 and to the base plate 25. Attached to the frames of the counters 11 to 14 are four rollers 37 serving the purpose of guides for an engaging bar 35, in a suitably shaped slot on which a roller 36 fixed to the lever 32 is able to move. The displacement of the roller 36 thus entails the rotation of the shaft 34. The engaging shaft 28 is mounted in such a way on the levers 32 and 33 as to be able to revolve and at the same time slide in a longitudinal direction; this dual movement causes a tooth 27 to be brought opposite a nose 26 in the abacus 20 which has to come into engagement in order to effect the calculation, the revolving and sliding movements of the shaft 28 are controlled starting from the keyboard of the machine by means of a contrivance to be described in detail below.

A spring 38 tends to hold the ramp of the engaging bar 35 against a roller 39 mounted rotatably at the end of a lever 40 pivoted at 43 on the left side plate 1 of the machine. A spring

41 holds the lever 40 against the end of the ramp 35. Likewise pivoted on the spindle 43 is a lever 42 whose free end is provided with a stud 44 acting as a stop for the lever 40. One end of the connecting rod 45 is rotatably mounted on the lever 42, and its other end is carried along by a lever 46 pivoted at 46¹. One end of the lever 46 acts on the connecting rod 45; the other end of the lever 46 supports a roller 49. A cam 47 fast with the spindle 48 fixed in the side 1 and in the plate 15 acts on the roller 49 of the lever 46. The spindle 48 is set in rotation by a spring, electric or other motor, as will be fully explained later on. It is understood, of course, that there is an abacus to each section of the machine with its own set of levers 40 to 42. It will be seen that when the machine is in the position of rest the studs 44 on the levers 42 will hold the levers 42 against the pull of the springs 41; the ramp on the bar 35, held by the spring 38, will thus remain in the position of rest (in the direction opposite to that shown by the arrow in Figure 6).

The shape of the cam 47 comprises a part forming one projecting sector; the cam 47 is keyed to the shaft 48 in such a way that when the cam 47, carried along by the shaft 48, is set in rotation the hollow part of the cam will cause the lever 46 to tilt; the studs 44 will then disengage the corresponding levers 40 and the ramps on the bars will be displaced in the direction indicated by the arrow (see Figure 36) under the action of the springs 41 and the engaging shaft 28 will have one of its teeth pressing against the nose in one of the calculating tables 20 whose corresponding slides will thus be released.

If the cam 47 continues to rotate, the profile will encounter the roller 49 which, by means of the lever 46, will push back the rod 45 and the corresponding lever 42 in such a manner that the stud 44 will again hold the lever 40, and will also, owing to the action of the spring 38, bring the ramp 35 in the direction contrary to that indicated by the arrow.

During this part of the movement of the shaft 48, and whilst this shaft 48 is in the position of rest, the springs 38 will bring the bars 35 back again in a direction contrary to that of the arrow, the teeth 27 of the engaging shaft 28 are maintained away from the noses 26 in the calculating tables 20 and all the slides 22 will now be kept locked, by means of the springs 31, against the stops 29.

Owing to the fact that by means of the first part of the movement of the cam 47 the slides 22 of one of the calculating tables 20 have been unlocked, the notation notches 50 in the slides 22 will engage in the rim 51 of the square members 52.

These square members 52 comprise two horizontal arms 52*a* and one vertical arm 52*b*; arranged on the frames of the counters 11 to 14 are guides in which the horizontal arms slide; the lower end of each vertical arm is displaceable in the groove in the base plate 25. Springs 54, attached on the one hand to the frames of the counters and on the other hand to the square members 52, always bring the said square members 52 back again; when the unlocking which has just been described is effected, the slides 22 will engage in the rim 53 of the vertical arms 52*b* of the square members 52 (see Figures 3, 7 and 8).

Mounted on the horizontal arms 52*a* of the square members are two studs 55 and 56. Normally, the stud 55 is engaged by a detent 57, itself jointed to the lower end of the vertical arm of a crank lever 58 which in its turn is jointed to a guide bar 59.

The detent or pawl 57 is provided at its other end with a roller 61.

Each guide bar has on its rim a notch 72 for taking a tooth 73.

At the end of the horizontal arm of the lever 58 is a roller 60. A steel spring 62 is attached on the one hand to the frames of the counters 12 and on the other hand to the detent 57 at a point lying between the joint 63 and the pivot of the roller 61.

The rollers 60 and 61 rotate in two different planes (see Figure 3) and their position with regard to height is determined by two consecutive carrying forward bars 64; that is to say, if the two rollers 60 and 61 in question correspond, for instance, to the tens, the roller 61 of the detent 57 will run on the carrying forward bar 64 corresponding to the tens, and the roller 60 of the detent 58 will run on the bar 64 corresponding to the units. Of the rollers 60 of the lever 58, the one corresponding to the last order of notation will run on a carrying forward bar, i. e. a bar of subtraction, whose function and construction will be described later on. In other words, running on each carrying forward bar 64 is a roller 60 and a roller 61, the roller 61 corresponding to the order of notation of the bar 64 in question and the roller 60 of the carrying forward bar which corresponds to the order of notation immediately lower.

Each carrying forward bar 64 has two ramps 65 and 66 (see Figures 7 and 8) which are displaced on guides fixed to the frames of the counters 11 to 14; the position of said guides is such that when, owing to the action of the springs 67, the carrying forward ramps are displaced longitudinally they will at the same time execute an upward movement whose amplitude is a function of the shape and of the slope of the ramps 65 and 66. The springs 67 always endeavour to bring the carrying forward bars 64 back into their highest position. A disengaging shaft 68 provided with a stud 69 (see Figures 4 and 8), overcoming the pull of the spring 67, holds the carrying forward bars 64 in their lower position, the stud 69 acting in the same way on the angle rims 70 of the bars 64.

The ends of the disengaging shafts are supported in holes provided in the frame of the counters 12 and 14 and in the base plate 25. The said spindles 63 are concentrically mounted (see Figure 4) in such a manner that when the slides 22 are unlocked and reach their extreme position the notch 71 will come opposite the eccentric part and will thus slightly rotate the disengaging shafts 68. During this rotation the studs 69 will be disengaged from the angle rims 70 of the carrying forward bars 64 which will thus be released and will then be able, owing to the action of the spring 67, to be displaced longitudinally and at the same time to be raised through the ramps 65 and 66 of the bars 64.

Teeth 73, engaged in the notches 72—one of which is provided on each of the guide bars 59—are integral with the stop bars 74 arranged longitudinally in the machine. Each bar 74 is fitted with teeth 75 and 76 arranged in sets of two, i. e., 75A, 75S and 76A, 76S (see Figures 8, 9, 10); stepped bars (stepped ramps) 144 and 145 (see Figure 8) are integral with the bars 74, the ramp 144 being fixed on the left and the ramp 145 on

the right of said bars. A transverse motion common to all the bars may be imparted to the bars 74 and a longitudinal motion independently for each of the stop bars. These displacements are effected in the following manner:

(a) Mounted between the stop bars 5 and 6 are two spindles 85 on which one end of two levers 84 can turn (one at each end of the shafts 85) the other ends of which are fast with the shafts 82 and 83 (see Figures 8 and 10) to which the transverse guides 77 and 78 are fixed.

(b) Secured to the key-boards 81 are transverse guides 79 and 80 (see Figures 1, 8 and 10).

The stop bars 74 are liable to slide on the four transverse guides 77, 78, 79 and 80. The transverse motion, common to all the bars 74, is rendered possible by the fact that the tooth 73 is long enough to prevent any transverse displacement of the bars 74 disengaging them from the notches 72 in the slide bars 59.

The key-board of the machine comprises a certain number of rods 86 arranged in rows: each row corresponds to one order of notation; the number of rows provided will depend upon the orders of notation necessary to the machine. The number of rods 86 in each row is equal to the number reduced by 1 of the units in the basis of the numeration adopted; for instance, if the machine is operated on the decimal system, the number of rods will be nine. The key-board cases 81 are provided with grooves which allow the rods 86 to be displaced vertically.

The rods 86 are provided with a tooth 89 and a ramp 93; they comprise a path-limiting stop 91 and, with a view to facilitating their manipulation, are provided with a key which may be attached to the end of the rod in any suitable manner.

Arranged on the key-board cases 81 (see Figure 9) for each row of rods 86 is a vane 87 provided with a right-angled flange 88 which normally engages in the teeth 89 and, under the vane 87, is another vane 92 likewise provided with a right-angled flange which slides on the ramps 93 of the teeth. A spring 90 fixed to the rods and key-board cases always pulls the rods 86 in an upward direction, their displacement in this direction being limited by the stud 91. The aggregate of these devices is such that when one of the rods 86 is depressed the vane 87 is simultaneously disengaged from all the other rods 86 which may previously have been engaged. As to the vane 92, this is dropped, under the influence of the ramps 93, when any one of the rods 86 is depressed.

To the key-board casing 81 are pivoted at one of the ends of bell crank levers 95 the free ends of which are, when in the normal position, opposite blocking tooth 96 of the index row A of the stop bars 74. The lever 95 is held out of its normal position by a finger 195 mounted on the vane 92 when this latter oscillates. In other words, the lever 95 prevents any sliding movement of the bar 74 as long as one of the keys 86 has not been depressed or all the bars 74 have not made any transverse movement.

When the stop bars 74 are in their normal position, when one of the keys is depressed, the end of the corresponding rod 86 descends until it is in the plane of the row A of the teeth 75—76 of the stop bar 74.

On the other hand, when the stop bars 74 have undergone a transverse movement, a rod 86 is depressed, the extremity of which becomes located in the plane of the row S of the teeth 75—76.

The guide 77 is drawn towards the left by a spring 300, called the subtraction spring. This spring therefore draws towards the left the whole of the stop bars 74. On the guide 77 is provided a stop 98 against which a stop lever 97 bears when in its adding position, which prevents the displacement or oscillation of the whole of the stop bars 74. The lever 97 is held in the adding position by a spring 99. Under the action of the lowering of a ramp 101, defined hereinafter, a lever 100 is enabled to oscillate slightly the lever 97 on the stop bar 6. The ramp 101 is rendered integral by a suitable system of rods with the subtraction bar S the guiding of which is similar to that of the rods 86.

When at rest or when in the normal position the whole of the stop bars 74 are held in the adding position (or normal position) by the lever 102 which leaves its position as soon as the machine commences a working cycle (see Figure 16).

The driving bars 59—and at the same time the stop bars 74 which are in one therewith as regards longitudinal movements—are held in the normal position, or the position of rest, by a yoke or strap 103 (see Figures 7, 8, 13 and 14) comprising a bar fixed by both ends to two slides 107 provided with rollers 108 which run in grooves in guides 109 fixed to the counting frames 13 and 14.

The horizontal bars 52a of the squares 52 are provided with stops 104 (see Figure 3) which permit of the said arms being carried along by yokes 105 and 106 (see Figure 13) and which hold the squares 52 in their normal position or position of rest.

In like manner, the yoke 105 is fixed by its ends to the said slides 107. The yoke 106 is fixed to two slides 110 guided by rollers 111 which run in external grooves formed in the guides 109 (see Figures 13 and 14). Two small connecting rods or links are pivoted at one of their ends to the two outer slides 110. Two small connecting rods or links 113 are pivoted to the internal slides 107.

At their other ends the small connecting rods or links 112 are pivoted to the levers 114 fast with the shaft 115 and the small connecting rods or links 113 are pivoted to the levers 116 fast with the shaft 117. The shafts 115 and 117 turn in bearings formed in the side pieces 1 and 2 of the machine (see Fig. 1).

The shaft 115 is in its turn fast with a two-armed lever 118 carrying on the end of one of its arms a roller 119 which rolls over a cam 120 mounted on the shaft 48 (on which is also mounted the cam 47). The shaft 117 is integral with a lever 121 provided at its other extremity with a roller 122 arranged so as to be capable of rolling on the other arm of the lever 118.

When the cam 120 holds the roller 119 in its lowered position, the yokes 105 and 106 keep all the square numbers 52 in their normal position or position of rest, while the yoke bar 103 keeps all the driving bars 59 and all the carry-over bars 64 in the position of rest. Shortly after the commencement of the rotation of the cam 120, it leaves the roller 119. All the yokes 103—105—106 retire and abandon the driving bars 59, the carry-over bars 64 and the square numbers 52 to the action of their respective springs. In continuing its rotation the cam 120 will again come into contact with the roller 119 which will bring back the yokes to the front again and cause the

bars 59 and 64 and the square numbers 52 to return to their normal position.

On the engagement shaft 28 is keyed, or fixed in any other manner, a pinion 301 (see Figures 5 and 16). A ratchet collar 302 fast with a shaft 123, always remains in engagement with the pinion 301; even when the engagement shaft 28 is caused to rock by the levers 32 and 33, the ratchet 302 can accompany this movement because the shaft 123 can rotate about its axis.

A grooved pulley 124 is likewise fast with the engagement shaft 28. A finger 125 penetrates into the groove of this pulley 124 and this finger is mounted on the end of a rectangular lever 126, fixed to the counting frames 11 to 14, while the other end carries a finger 127 which penetrates into a groove formed in a bar 128,

Under these conditions any longitudinal movement of the shaft 123 is translated into a corresponding rotation of the shaft 28 and any longitudinal movement of the bar 128 is translated into a corresponding sliding movement (upwards or downwards) of the same shaft 28.

In the shaft 123 and in the bar 128 are formed grooves in which enter lugs 129 on the stop bars 130. Contrary to the stop bars 74, the stop bars 130 carry only a single row of teeth (131—Figures 10 and 16) and they are guided by guides 132–133 which cannot be moved laterally (see Figure 10).

At the same time, as they guide the rods 86, the keyboards 81 act as guides for the rods 134 which have the same characteristic features as the rods 86. When the rods 134 are lowered their inner ends are on a level with the teeth 131.

Springs 135 fixed to the counting frames always return the stop bars 130, a yoke 136 holding them against the force of the spring 135—in their normal position of rest. The walls 15 and 137 are provided with guide grooves for the yoke bar 136. This yoke is made fast by means of small connecting rods or links 138, 139 pivoted to each other and to the yoke with a shaft 140 which rotates between the side piece 1 and the wall of the cam 15. On the shaft 140 is fixed like one of the ends of the small connecting rod or link 139, by keying or otherwise, a lever 141 the free end of which is carried along by the shaft 48. In one rotation of the shaft 48 (in the direction of the arrow in Figure 1) the cam frees first the roller 142, which allows the yoke 136 to retire (by the rods 141-139-138) and the stop bars 130 can respond to their springs 135 and advance in the direction indicated by the arrow. The bars 130 will then be arrested by the bars 134 which are lowered.

The spacing of the teeth 131 and that of the rods 134 is such that, relatively to the distribution of the fingers 27 on the engagement shaft 28, at each position of arrest of the stop bars 130 a finger 27 is brought opposite the face of a member 26 of a different abacus.

An arrangement of this kind in no way limits the number of abacuses 20 which can be brought into engagement with the edges 56 of the square numbers 52. Actually the finger 57 can be distributed over the shaft 28 along a helicoidal line in such a way that for each position of arrest of a stop bar 130, the rotation of the shaft 28 shall be limited to bringing one finger 27 only accurately in front of the vertical line of the members 26. On the other hand the fingers 27 may be distributed over the shaft 28 in such a way that for each position of arrest of another stop bar 130, the sliding movement of the shaft 28 shall be limited to bringing the finger 27 (which has just been brought opposite the vertical line of the members 26) to the height of that one of these members 26 which corresponds to the abacus which is to intervene for the calculation under consideration.

Staggered ramps 144 and 145 constitute respectively an adding ramp (144) and a subtracting ramp (145). On the cross bar 9 are fixed guides 147 which permit of the sliding, upwards, of registration sectors 146, comprising two vertical slots 146′ (see Figures 8, 17, 18). These sectors are constantly drawn upwards by springs (not shown). The sectors 146 comprise hooks 148. These sectors are so positioned that if the whole of the stop bars 74 is in the normal position, the left hand side of the hooks 148 is in the plane of the adding ramps 144, just below the lower echelon. On the contrary, if all the stop bars have been moved towards them, that is to say if they are all in the subtraction position, the right hand side of the hooks 148 will be situated in the plane of the subtraction ramps 145, just below the highest echelon.

Each registration sector 146 has a mortise 149. Into this mortise enters a projection 150 on a connecting or union plate 151 corresponding thereto. The connecting plates 151 have vertical slots 151′ in each of which engages a shouldered shaft 152. The shafts 152 are fixed to the cross bar 9 (see Figures 17, 18). This arrangement permits the plates 151 to produce a vertical sliding movement upwards. The plates 151 each have a second projection 153 which enters a mortise 154 formed in the corresponding impression sector 155. Guides 156 fixed by their ends in the side pieces 17–18 serve to guide the sectors 155 in their upward sliding movement.

To the impression sectors 155 are pivoted the character rods 157 which are guided by a comb 158 fixed to the side pieces 17—18 and kept in a vertical position against the bottom of the said comb by springs 159. An impression roller 303 is mounted opposite the upper ends of the rods 157. Opposite the impression roller, the rods 157 carry characters each of which is separated from the adjoining ones by a distance equal to the difference of the height of the ramps 144 and 145. A yoke 160, guided by grooves formed in the side pieces 17, 18 keeps all the impression sectors 155 on the normal position, or position of rest by means of the straight part 161 of cams 162. These latter are integral with a shaft 163, which is itself integral with a lever 164. This lever 164 carries on its free end a roller 165 which rolls over a cam 166, keyed or otherwise fixed on the shaft 48 of the cams (see Figures 17, 18). A spring 185 fixed on the cross bar 9 and to the lever 164 holds the said against the cam 166.

The cams 162 have a curved part which bears against rollers 167 mounted on the ends of levers 168, which, in order to be able to rock, are mounted betwen the side pieces 17, 18. The levers 168 act on rollers 169 varried by yokes 170 of hammers 171. The yoke 170, which is fixed to the side pieces 17, 18 in view of its rocking movement, holds all the hammers 171 in the normal position or position of rest. The hammers 171 are pivotally mounted on a shaft 172 fixed to a comb 173 which is itself fixed to the side pieces 17, 18. Each hammer 171 is biassed by a spring 174 mounted in such a way that the hammer strikes the rods 157 when the yoke 170 is free. To each hammer 171 corresponds a pawl 175 mounted on a shaft 176 fixed

to the comb 173. The pawls 175 hold normally, by their hooked ends, the corresponding hammers. On the other hand the pawls 175 have a bent edge 177 (see Figure 19) which normally enters a notch or groove corresponding thereto in the character rods 157. The bent edge 177 of each of the pawls 175 is situated above the bent edge corresponding thereto of the pawl 175 of the immediately superior order of numeration. Relatively to the notches 178 and to the hammers 171 the arrangement of the pawls 175 is such that when one of the character rods 157 moves upwards by an amount greater than the value of a space, this rod lifts the corresponding pawl, which in its turn lifts the next pawl and so on. Under these conditions all the pawls 175, of an order of numeration lower than that of the pawl lifted by the character rod considered, are lifted, thus affording the hammers opportunity to strike.

The side pieces 17 and 18 carry a shaft 180 on which are pivoted pawls 179 which are held by springs 181 so as to prevent the hammers from striking even if the stirrup has been moved away and if the pawls 175 have to be lifted. The pawls 179 have a flange 192 (figures 17, 18) which fits against the corresponding flange of the pawl 179 of the order of numeration immediately superior to that of the first one. The side piece 17 carries a lever 183 (having an arm 187) which oscillates about its point of fixation and carries a finger 184 (at right angles to its plane). This finger 184 releases the first of the pawls 179 which, by its bent edge releases the next one and so on until all the hammers 171 not held by the pawls 179 are released in succession for the purpose of making their successive striking movements.

When the shaft 48 has made one revolution, the cam 166 liberates the roller 165. The spring 185 causes the cams 162 to oscillate upwards so that they allow the yoke 160 and the impression sectors 155 to rise. These sectors 155 can however rise only just so far that the hooks 148 are arrested by the echelons of the echelon adding ramp 144 or of the subtraction ramp 145 (according to the position of all the stop bars 74). This upward movement of translation is followed by the side connecting pieces 151 and the impression sectors 155 which will be arrested likewise as a function of the position of the echelon ramps 144, 145. The cams 162 follow their upward movement, and slightly before the end thereof they will completely free the rollers 167. At this moment, the levers 168 and the yoke 170 oscillate which partly frees the hammers 171 which, however, are still held by the pawls 179. At the end of the movement of the cams 162, their wedge 186 pushes the arm 187 of the lever 183. This latter acts on the first of the pawls 179 which are disengaged successively as has been described above in such a way that the hammers 171, already disengaged from the pawls 175, will be able to strike them also successively.

Continuing its rotation the cam 166 will again come into contact at its larger diameter with the roller 165 and the cams 162 will descend again. The right hand part 161 of these cams will draw the yoke 160 downwards and in consequence of this the sectors 155, the plates 151 and the sectors 146 will resume their normal respective lower positions. During the time which this takes the curved part of the cams 162 will cause the lever 168 to rock which will bring back the yoke 170 into its normal position. The yoke 170 in its turn will bring back the hammers 171 into the normal position. The pawls 175 will resume at the same time under the action of gravity, the position of rest and the springs 181 will draw the pawls 179 into their position of rest.

The frame of the counters 12 and 14 carry total blocking bars 188 which can be moved lengthwise (see figures 7, 8, 21). These bars 188 are provided with teeth 189 which are adapted to block the stops 69 when they move. To the bars 188 are pivoted small connecting rods or links 190, which are pivoted at their other ends to levers 191 fixed so as to permit them to rock, on the counting frames 12, 14.

In order to block the keyboard, a bar 192 (the keyboard blocking bar) is provided which is mounted on the keyboard casing 81 so as to be able to make a longitudinal translation (see Figure 10). The bar 192 is provided with recesses 193 into which enter fingers 194 and 195 fixed to the members 87 and 92. The position of these recesses 193 is such that when the bar 192 moves in the direction of the arrow they cause to rock, by the fingers 194, all the members 87, thus liberating all those of the rods 86 which are lowered. The recesses 193 act at the same time on all the fingers 195 so as to liberate all the stop bars 74. When the bar 192 moves in the direction opposite to that indicated by the arrow, the upper recesses 193 block the figures 194 and prevent any movements of the parts 87 and therefore of the rods 86.

Pawls 196—1—7 are pivotally mounted on the counting frame 13—14, on each side of the engagement ramp 35 (see Figures 12, 20). The lower arms of each of the pawls 196, 197 arrest, in their lowered position, the movements of the ramps 35. The pawl 196 is called the "sub total pawl" and is adapted to arrest the ramp 35 when it is attracted by the spring 38 (see Figure 6). The pawl 197 is called the "non-adding pawl" and is adapted to arrest the ramp 35 when it is attracted by the spring 41.

A driving shaft 198 is mounted on guides 199 which are fixed to the side piece 2 (see Figures 10, 12, 20, 21). This shaft is adapted to slide longitudinally and to oscillate about its axis in the guides 199.

On the shaft 198 is fixed a keyboard locking device 200, provided with a projection 201 which enters a recess formed in a lever 202 fixed on a support 203 which permits the said lever 202 to oscillate about its point of fixation. The lever 202 has a second recess into which enters a roller 204 fixed to the keyboard blocking device 192. The mounting of these different parts is such that when the shaft 198 rocks in one direction or the other, the blocking bar 192 will slide in the corresponding direction by the exact amount necessary to ensure the blocking operations above described.

On the shaft 198 is likewise fixed another driving block 205 provided with two projections 206 and 207 (Figure 21) which can be engaged by a driving ramp 208 and a projection 209 normally engaged by the "total driving ramp" 210.

The block 205 has an arm 211 which is adapted to engage an arm 212 of the lever 191 (corresponding to section I of the machine) when the shaft 198 makes no further longitudinal movement.

An arm 213 (Figure 20) is likewise integral with the shaft 198. This arm 213 is adapted to engage with the arm 121 of the lever 191 of another section (II for example of the machine) when the shaft 198 moves longitudinally.

The ramps 208 and 210 are integral with a pin 214 which is fixed, for the purpose of its to and fro movement, to the side piece 2. On the cam shaft 48 is mounted a cam 215 (see Figure 20) and the pin 214 carries a roller 216. On the cam 215 is mounted a second cam 217 provided with a roller 218 which can be engaged by a ramp 219 called the repetition ramp. Finally the cam 215 is adapted to engage a second short roller 220 likewise mounted on the pin 214.

When the shaft 48 makes a revolution the cam 215 first engages the roller 216, which causes the pin 214 to descend. The ramp 219 then engages the roller 218 and causes the cam 217 to project forwards which will then engage the roller 220 which will raise the pin 214 above its normal position. Finally levers 221 and springs 222 will bring back the pin 214 to its normal position.

A spring 223 attracts the shaft 198 but its action is counteracted by a fork 224, integral with the yoke 136, which bears against a ring 225, fixed on the shaft 198 and thus holds the shaft 198 in the normal position or position of rest.

The shaft 198 also carries two rings 226, 227 (see Figures 11–20). The side piece 1 carries supports 230 between which are fixed pivotally levers 228, 229, notched at 231 so as to be able to engage rings 226, 227 and thereby arrest the longitudinal movement of the shaft 198 produced by the spring 223. The lower ends of these levers 228, 229 are guided in slots formed in a support 232 which guides them and are likewise fixed to the side piece 1.

The position of the rings 226, 227 on the shaft 198 and the distance between the levers 228 and 229 relatively to the distance apart of the arms 211, 213 on the shaft 198 are such that when the lever 228 for example, rocks, only the arm 211 of the lever 191 of the section II of the machine, while, when the lever 229 oscillates, only the arm 213 will engage the arm 211 of the lever 191 of the section I of the machine.

On the end of each of the usual driving rods S, T_2, ST_2, T_1, ST_1, NA_2, NA and NA_1 is fixed a key. These rods are mounted in a keyboard casing 81 as already described for the rods 86. All the said rods have an arm 233.

The various mechanisms which are capable of operating the rods S, T_2 . . . enumerated above, will now be described.

The subtraction rod S is pivoted to the ramp 101. When the rod S is depressed, the ramp 101 causes the lever 100 to rock about its point of fixation on the cross bar 6. The lever 100 causes the lever 97 to rock which permits the stop bars 74 to make their rocking movement.

By the depression of the rods T_2 and ST_2 the arms 233 corresponding to them will cause the shaft 234 fast with the rock lever 228 to descend.

By the depression of the rods T_1, ST_1, the arms 233 corresponding to them will cause the shaft 234 fast with the lever 229 to descend. At one of their ends the connecting rods 235 are connected by means of key hole slots 235′ to the driving rods ST_2, ST_1, NA_2 and NA_1. At their other ends the connecting rods 235 are pivoted to fixed levers 236 rocking on the support 237 integral with the cross bars 5 and 6. The connecting rods 235 of the rods NA_2 and NA_1 each carry a projection 240. Each of the levers 236 has a second arm at right angles to the first one and on the end of which are pivoted the connecting rods 238. The other end of the connecting rods 238 is pivoted to one of the pawls 196, 197 under conditions which will be described in full hereinafter.

The depression of the rod ST_2 causes the rocking of the pawl 196 of section II

The depression of the rod ST causes the rocking of the pawl 196 of section I of the machine

The depression of the rod NA_2 causes the rocking of the pawl 197 of section II

The depression of the rod NA_1 causes the rocking of the pawl 197 of section I.

The rod NA is provided with a cross bar 239 which causes the projections 240 to descend so as to cause the two pawls 197, which correspond to the two sections of the machine, to rock.

On the shaft which carries the cams 48 is mounted a lever 241 (see Figures 15 and 21) carrying on each of its ends a pawl 242 with corresponding return springs 243. A ratchet 244 is mounted on the shaft of a reducer RR. The arrangement of these parts is normally such that the ratchet 244 acts on the pawls 242 which thus drive the cam shaft 48.

On the wall 15 are pivoted two bell crank levers 245, 246. Each of the two levers carries, on the end of one of their arms, a projection 247 and they are held together by a spring 248 (the ends of which are fixed respectively to each of the arms carrying the projections 247). The approach of the levers 245, 246 to each other is limited by two stops 249. The other arms of the levers 245 and 246 carry respectively a projection 250 and a notch 250′ (into which the projection 250 enters). The projections 247 are situated in the paths of the tails of the ratchets 242 so that the said projections will cause the tails of the pawls 242 to rock as soon as they have reached them; the pawls 242 will disengage themselves from the ratchet 244 and the cam shaft 48 will cease to revolve.

The lever 245 is fast on a shaft 251 mounted to revolve between the side piece 2 and the wall 15. In its turn this shaft 251 drives an arm 252 pivoted to a small connecting rod or link 253 on an arm of which are pivoted two levers 254 the oscillation of which takes place on the other hand about a point on the side piece 2. Each of the levers 254 carries a shaft 255. A driving bar 256 is mounted on these two shafts 255. The arrangement is such that when pressure is applied to the bar 256, the two levers 254 rock parallel. This rocking movement will be transmitted by the connecting rod 253 to the lever 245 and the levers 245 and 246 will be separated from each other. The pawls 242, attracted by the springs 243 engage the ratchet 244 and the cam shaft 48 will begin to rotate. The said shaft 48 will make only one revolution exactly because in the meantime the spring 248 has drawn the levers 245 and 246 together and the tails of the pawl 242 will meet, in returning to their starting position after one revolution of the ratchet 244, the rollers 247 of which will result in the pawls 242 of the ratchet being moved away thus arresting the shaft 48.

The way in which the machine which has just been described works in the different operations for which it has been provided is as follows:

I. Addition.—The operator depresses the keys 134 corresponding to the abacus 20 which must be set in operation and the keys 86 corresponding to the figures which are to be added in the various rows of calculating elements 22. The operator then strikes the driving bar 256. The cam shaft 48 then produces a rotation of a complete revolution (see above). During this time (1)

the cam 143 allows the roller 142 to fall the yoke 136 retires with the lever 102 and the fork 224. The lever 102 disengages all the stop bars 74 but it does not rock (since the lever 97 has not rocked under the action of the subtraction ramp 101). The spring 223 drives round the shaft 198 in a sliding movement which places the projection 206 and 207 within reach of the ramp 208.

(2) the cam 215 engages the roller 216, the pin 214 descends and the damp 208 engages the projection 206 which causes the shaft 198 to rock. The projection 201—the length of which is sufficient to prevent its coming out of the lower notch in the lever 202—rocks this latter. The lever 202 causes the blocking bar 192 to slide in the opposite direction to that indicated by the arrow. All the rods 86 are thus held in the position which has been imparted to them by the operator.

(3) in continuing its rearward movement the yoke 136 allows the stop bars 130 to advance until they are arrested by those of the rods 134 which have been lowered by the operator. The bars 128 and the shafts 123 are driven in this movement and by this fact the engagement shafts 28 of each section of the machine are brought into the position corresponding to the composition realised by the operator on the keyboard. In other words one of the fingers 27 is placed in front of the projection which corresponds to the abacus 20 which must be set in operation for the calculation to be made.

(4) the cam 47 leaves the roller 49, the lever 46 rocks and the levers 40 are drawn back by the springs 41. The rollers 39 push the engagement ramps 35 forwards thereby causing the engagement shafts 28 to rock. These latter by their fingers 27 arranged opposite the abacus 20 cause the said abacus to slide with all its reglets 22. At the same time, the said reglets 22 are disengaged from the blocking bar 29 and enter into engagement with the bent edges 56 of the square numbers 52.

(5) the cam 120 frees the roller 119 so that the three yokes 103, 105 and 106 retire and permit of the advance of the driving bars 59 attracted by their springs 62. The bars 59 drive the square numbers 52 by the pawls 57. At the same time the bars 59 drive the stop bars 74 by the shafts 73 until the rods 86, lowered by the operator, arrest the said bars 74. As the reglets 22 of the considered abacus 20 are in engagement with the square number 52, these reglets 22 advance by an amount equivalent to that by which the rods have been lowered.

It may happen that the amount by which the reglets 22 advance, augmented by their progression in a previous operation is equal to or greater than the basis of numeration adopted for the machine (that is to say greater than nine in the case of the decimal numeration). In this case, the carrying over parts will intervene as follows:

The echelon 71 of the reglets 22 will then engage the disconnecting shaft 68 which rocks slightly with the stop which is integral with it. This latter disengages the carrying over bar 64 which rises under the action of its spring 67 and disengages the roller 61 corresponding to its row of numeration and also the roller 60 corresponding to the row of numeration immediately above it. Under the action of the spring 62, the pawl 57 which carries the roller 61 rises at this moment and disengages the stop 55 so that the square number 52 recedes until the stop 56 meets the shaft 63 of the pawl 57. Now it will be remembered that the position of the stop 56 is such that the recoil of the square number 52 is exactly equal to the length of the number of calculating elements 50 formed by the basis of numeration (ten, in the example chosen of the decimal numeration).

The roller 60, of the next higher row of numeration has likewise been raised. The roller permits the lever 58 (of the same order of numeration) to rock so that the pawl 57, on which the lever 58 is pivoted, advances by an amount which is supplementary to that which it ought to have progressed according to the position of the rod 86 of the order of numeration considered and which would have been eventually lowered by the operator of necessity.

The carrying over bar 64 can only rise by such an amount that the above mentioned supplementary amount is exactly equal to the length of an element of calculation 50.

(6) the cam 166 abandons the roller 165 and the cams 162 consequently rise. The registering members then function as has already been described. The stop bars 74 have advanced until stopped by the rods 86 which have been lowered by the operator. None of the stop bars have made any lateral movement so that the addition echelons 144 are located in the plane of the straight hook 148 of the registration sectors 146. The arrangement of these echelons 144 is such that the rise—which they limit—of the impression devices corresponds exactly to the emplacement of the rods 86 arrested by these bars. At the same time the registration of the advance of the stop bars 130 takes place. Concerning this it is necessary to remark that the character bars 157, corresponding to the stop bars 130, can carry special signs other than figures or in addition to figures.

(7) the cam 166 again engages the roller 165 and as has just been described the impression devices are brought back to their position of rest.

(8) the cam 47 engages the roller 49 which brings back the levers 40 to their position of rest. The same thing happens in the case of the ramps 35 (under the action of the springs 38). This movement moves the shaft 28 and the fingers 27 also away from the projection 26 of the abacus 20 considered, which returns to its position of rest under the action of the springs 31. This return to rest of the abacuses 20 may also be controlled by the key hole slots 257 pivoted to the levers 32, 33 by means of the small connecting rods or links 258.

(9) the cam 120 engages the roller 119 which causes levers 103, 105 and 106 to rock towards their normal position, the said levers 103, 105, 106 bring back to their normal position all the driving bars 59, all the carrying over bars 64 and all the square numbers 52 which have been removed as the result of the calculation.

(10) the cam 217, after having been rocked by the ramp 219 engages the projection 220 which lifts the pin 214 above its normal position. The ramp 208 pushes the projection 207 which rocks the driving shaft 198 and the block 200 integral therewith. The block 200 then drives the blocking bar 192 in the direction indicated by the arrow. The notches 193 in the upper edge of the bar 192 unlock the members 87 and push them back so as to unlock all the rods 86 and 134 depressed by the operator. As soon as the cam 217 has passed the roller projection 220, the pin 214 and the shaft 198 return to their normal positions under the action of the levers 221 and of the spring 222.

(11) the cam 143 engages the roller 142 so that the levers 139 rock and the yoke 136 resumes its normal position bringing back into the position of rest all the stop bars 130 and the rods 134.

(12) the shaft 198 can return to its normal position under the action of the fork 224, integral with the yoke 136. All the stop bars 74 return to rest under the action of the lever 102.

II. Subtraction.—The operations to be effected are the same as for addition, with the following differences. Besides the keys depressed for addition, the operator depresses the key marked S. This causes the ramp 101 to rock the lever 100 which rocks the lever 97 and moves it away from the stop 98. When the yoke 136 recedes carrying with it the lever 102, the whole of the stop bars 74 are displaced laterally under the action of the spring 96. The bars 74 are then arrested by their teeth S. These latter teeth are in such a position that they do not arrest the stop bars when they are displaced by sliding a distance proportional to the value of the rod depressed, but rather by a length or distance proportional to the difference between this value and a number of calculating elements 50 equal to the basis of numeration diminished by one (that is to say nine in the decimal system).

As all the stop bars 74 are displaced laterally, the tooth 96 of the addition row (see Figures 8, 10) becomes disengaged from the fingers 95; the stop bars 74, corresponding to the rows of numeration for which no bar 86 has been depressed by the operator, can then slide freely—and they slide freely—until the tooth 259 comes into contact with the cross bars 80, the tooth 259 being at a distance from the cross bar 80 equal to the length of as many calculating elements 50 less one which there are in the basis of numeration employed. As a result subtraction is performed by addition of the complement and the registration of the operation takes place in the same direction by the ramp 145 for subtraction which is placed in the reverse direction to the ramp 144 for addition so that the rise of the printing devices is inversely proportional to the longitudinal displacement of the stop bars 74. A rod 260 (see Figure 7) acts on the stop 69—on which it is pivoted—of the disconnecting shaft corresponding to the higher row of numeration.

III. Totalisation.—For the totalisation of the counters and the registration of the totals, the working is analogous to that of the machine which adds, with the following differences: the abacus 20 which has to be "totalised" belongs to one or the other of the Sections I or II of the machine which is supposed here to comprise only two sections. The operator then depresses the key T_1 or T_2 according as the abacus in question belongs to the first or second section of the machine. Owing to this depression one of the levers 228 or 229 is rocked and the notch 231 in this lever engages one of the rings 226 or 227 integral with the shaft 198. When the yoke 136 recedes, the shaft 198 is arrested by one of the levers 228, 229. The arms of the levers 211, 213 carried by the shaft 198, engage with one or other of the arms 212 of the lever 191 according to the section of the machine contemplated. The projection 209 remains engaged with the ramp 210 in such a way that when the said ramp descends the shaft 198 rocks in the direction opposite to that of the addition producing the following operations:

(*a*) the bar 192 which blocks the keyboard slides in the direction of the arrow moving all the teeth 95 away from the plane of the large tooth 96. At the same time, it rocks all the members 87 which liberates every rod 86 which may have been depressed by the operator

(*b*) one of the arms 211, 213 pushes the lever 212 corresponding to the section of the machine under consideration.

(*c*) the total blocking bar 188 moves in the direction of the arrow (see Figure 7) and its teeth 189 block the stops 69 and the disconnecting shaft 68 on which they are fixed.

When the yoke 103 recedes, all the stop bars 74, the driving bars 59 and the reglets 22 which have been engaged move forward under the action of the springs 62 (see Figure 8) because neither the rods 86 nor the bars fingers 95 oppose this advance. When, however, the echelon notch 71 of the reglets 22 strikes against the disconnecting shafts 68, these latter do not rock since they are blocked by the bar 188. Under these conditions, the reglets 22, the square numbers 52, the bars 39 and finally the stop bars 74 with the echelons 144 and 145 are arrested by overcoming the force of the springs 62. At this moment the printing devices come into action as has been described above and they register a sum corresponding to the position of the echelons 145 that is to say one equal to the complement of the distance covered by the reglets 22 when they move into their extreme position. The result is that when the cam 47 engages the roller 49—which produces the disengagement of the reglets 22—the latter are located in their extreme forward position, that is to say, are in the zero position.

IV. Negative balances.—The bar 59, corresponding to the highest row of numeration, has a stop 262 which engages, when the said bar arrives in the zero position, the lever 97 which disengages in its turn the stop 98 thus permitting the lateral displacement of the stop bars 74. When the moment of registration arrives, all the stop bars 74 rock under the action of the spring 96 and the echelons 144 are located in the plane of the notches 148. The amount registered is, therefore, equal to the distance covered by the reglets 22 when they move to their zero position.

A connecting rod 263 consolidates the longitudinal movements of the bars 59 of each order of numeration corresponding to the two sections of the machine. As only the disconnecting bars 68 of one section of the machine are blocked it is obvious that the totals registered are transferred to the other section of the machine. This transfer is made solely for the distance covered by the reglets 22 up to their zero, that is to say for the complement of their position before totalisation of the counters. As the transfer is made in the opposite direction to that in which the various amounts have accumulated on the abacus emptied by the totalisation, the negative balance required is obtained.

V. Sub total.—The differences between the operation of totalisation described under III and the "sub-totalisation" are the following:

The operator depresses one of the keys ST_1 or ST_2 according to the section of the machine which is to intervene. The pawl 196 of the section under consideration rocks. Consequently when the lever 40 is brought back to its normal position, the ramp 35 can no longer follow it and the spring 38 expands. When the keys ST_1 or ST_2 are liberated the pawl 196 rises under the action of the springs 264 and the ramp 35 returns to its normal

position under the action of the spring 41. In other words, the disconnecting movement of the reglets 22 is retarded so as to be produced after the return of the yoke instead of taking place previously. The reglets 22 do not therefore remain in the zero position when the registration is effected by the printing devices but as they still are engaged by the square members 52, return to their original position.

VI. Non addition.—The operator depresses one of the keys NA_1 or NA_2. The pawl 197 of the section corresponding thereto rocks so that when the lever 40 is disengaged by the lever 42, the lever 40 remains blocked because the ramp 35 is arrested by the pawl 197. If the operator then depresses the key NA_1, the corresponding rod lowers, through the cross bar 239, the connecting rod 235 corresponding to the keys NA_1 and NA_2. All the pawls 197 rock and the two ramps 35 of the two sections of the machine are arrested.

A stop bar 265, provided with echelons 266, slides on the guides 132 and 133. A registering sector 267 (see Figure 20) is connected to an assemblage of registering devices described with reference to Figures 17, 18, 19 in which assemblage, however, the character bar 157 carries instead of figures the signa or indications corresponding to the functions under consideration.

VII. Correction.—A lever 268 is fixed to the side piece 1 of the machine so as to be able to rock (see Figure 20). At one end of the said lever is pivoted a rod C. The other end of the lever 268 is adapted to engage the projection roller 220 of the pin 214. To cancel any amount set up on the keyboard the key C is depressed. Both the pin 214 and the ramp 210 which rocks the driving shaft 198 with the block 200 is thus lowered. The blocking bar for the keyboard 192 then slides in the direction of the arrow (see Figure 10) which rocks all the members 87 and unlocks all the rods 86.

VIII. Repetition.—The ramp 219 can rock about a point on the side piece 1 and is pivoted to a lever R provided with a key and guided by a support 270. The lever R has a notch R_1. When the operator depresses the key R, the lever remains hooked by R_1 in the support 270. The ramp 219 descends and moves away from the periphery of the roller 218. When the shaft 48 makes a revolution, the cam 217 is not rocked and does not therefore come into contact with the roller 220. The pin 214 thus remains arrested in the normal position which is imparted to it by the levers 221 and the spring 222. At the end of the rotation of the shaft 48, the pin 214 does not move upwards which—as has been seen—would cause the unlocking of all the rods 86; the amount set up by the operator therefore remains set up on the keyboard by the ulterior operations.

FÉLIX PAPPÉ.

PUBLISHED
MAY 25, 1943.
BY A. P. C.

F. PAPPÉ
CALCULATING MACHINE
Filed Feb. 1, 1940

Serial No.
316,824
11 Sheets-Sheet 1

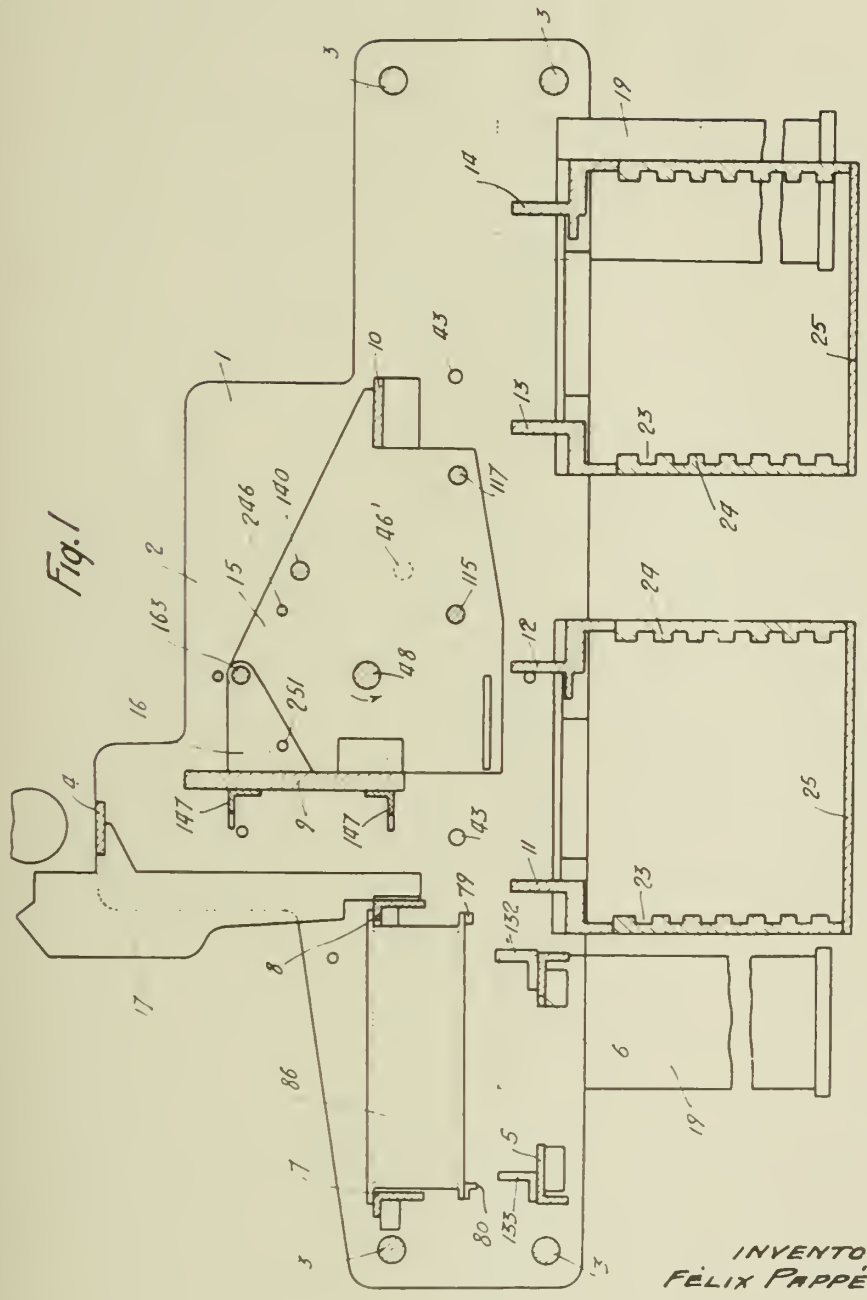

INVENTOR
FÉLIX PAPPÉ,

BY

ATTORNEYS

PUBLISHED
MAY 25, 1943.
BY A. P. C.

F. PAPPÉ
CALCULATING MACHINE
Filed Feb. 1, 1940

Serial No.
316,824
11 Sheets-Sheet 2

Fig. 2

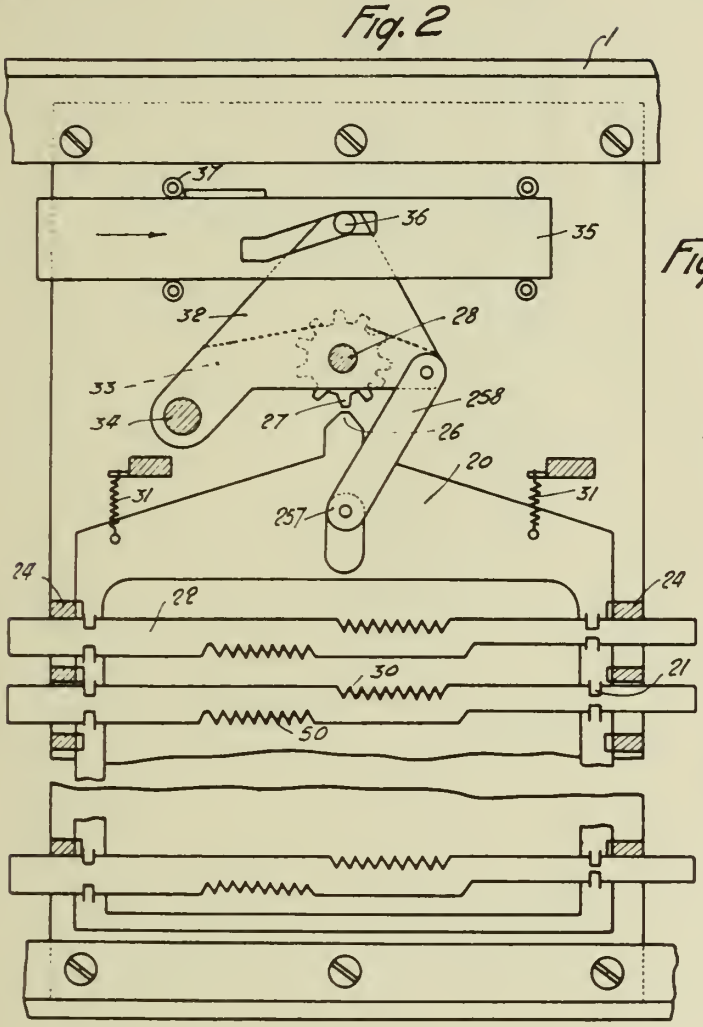

Fig. 4

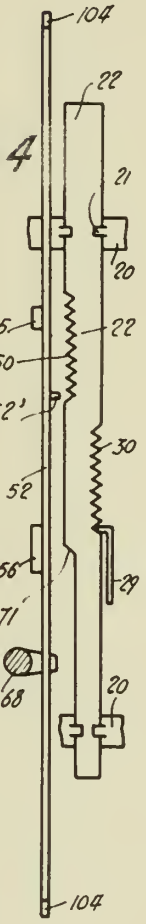

Fig. 3

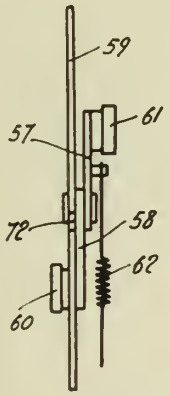

INVENTOR
FÉLIX PAPPÉ,

BY Allen & Allen
ATTORNEYS

PUBLISHED
MAY 25, 1943.
BY A. P. C.

F. PAPPÉ
CALCULATING MACHINE
Filed Feb. 1, 1940

Serial No.
316,824
11 Sheets-Sheet 3

Fig. 5

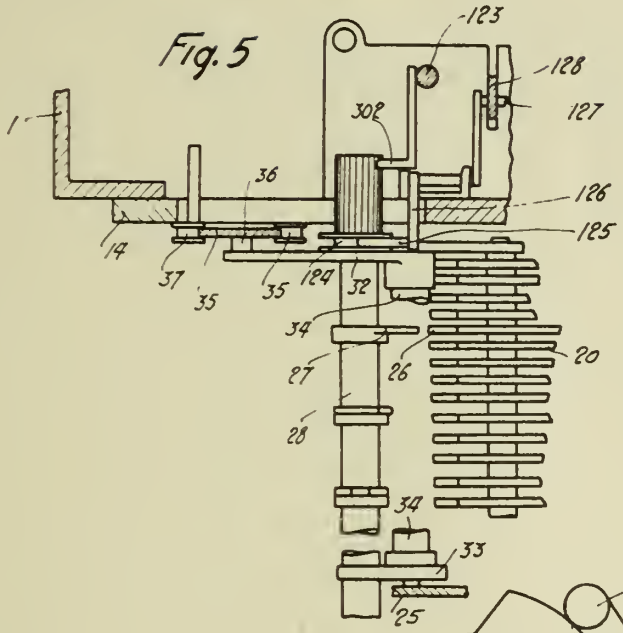

Fig. 6

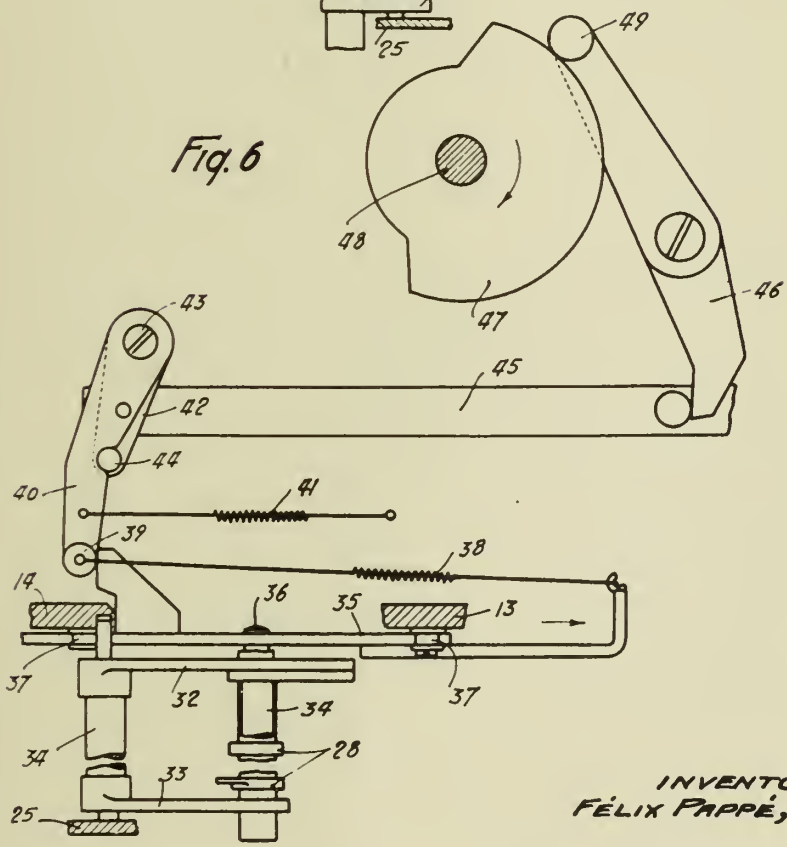

INVENTOR
FÉLIX PAPPÉ,

BY Allen & Allen
ATTORNEYS

PUBLISHED
MAY 25, 1943.
BY A. P. C.

F. PAPPÉ
CALCULATING MACHINE
Filed Feb. 1, 1940

Serial No.
316,824
11 Sheets-Sheet 4

Fig. 7

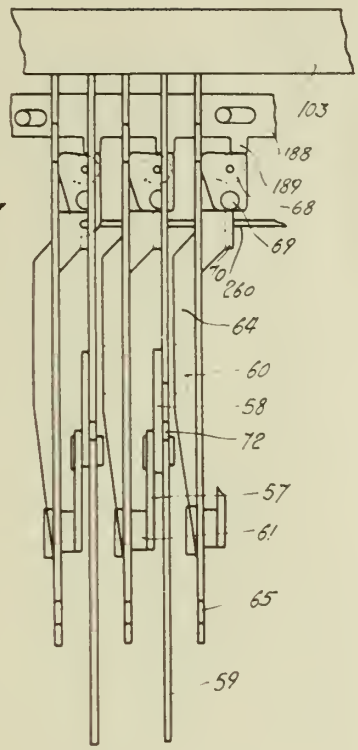

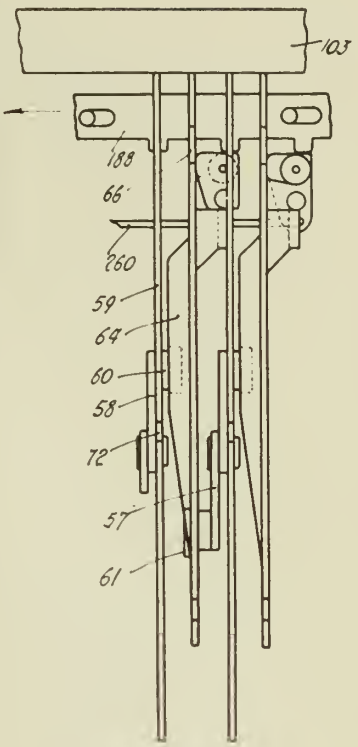

Fig. 11

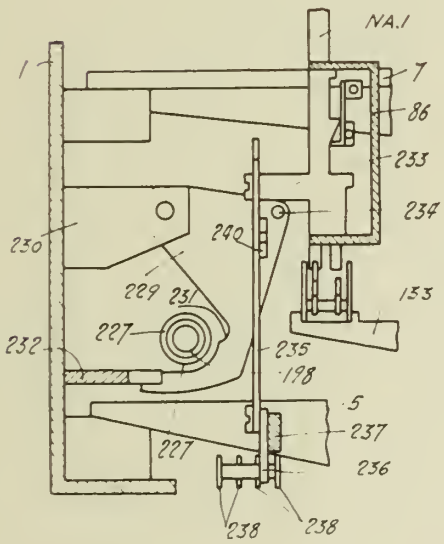

Fig. 12

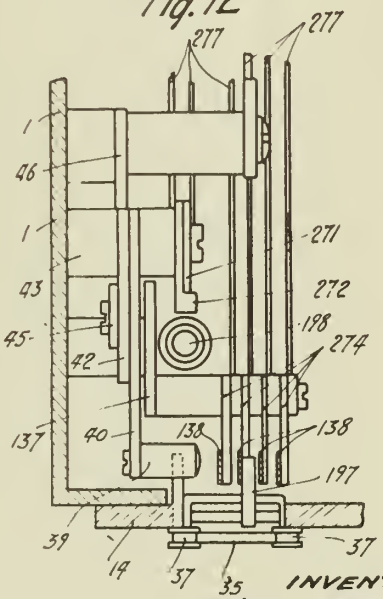

INVENTOR
FELIX PAPPÉ,

BY Allen & Allen
ATTORNEYS

PUBLISHED

MAY 25, 1943.

BY A. P. C.

F. PAPPÉ

CALCULATING MACHINE

Filed Feb. 1, 1940

Serial No.

316,824

11 Sheets-Sheet 5

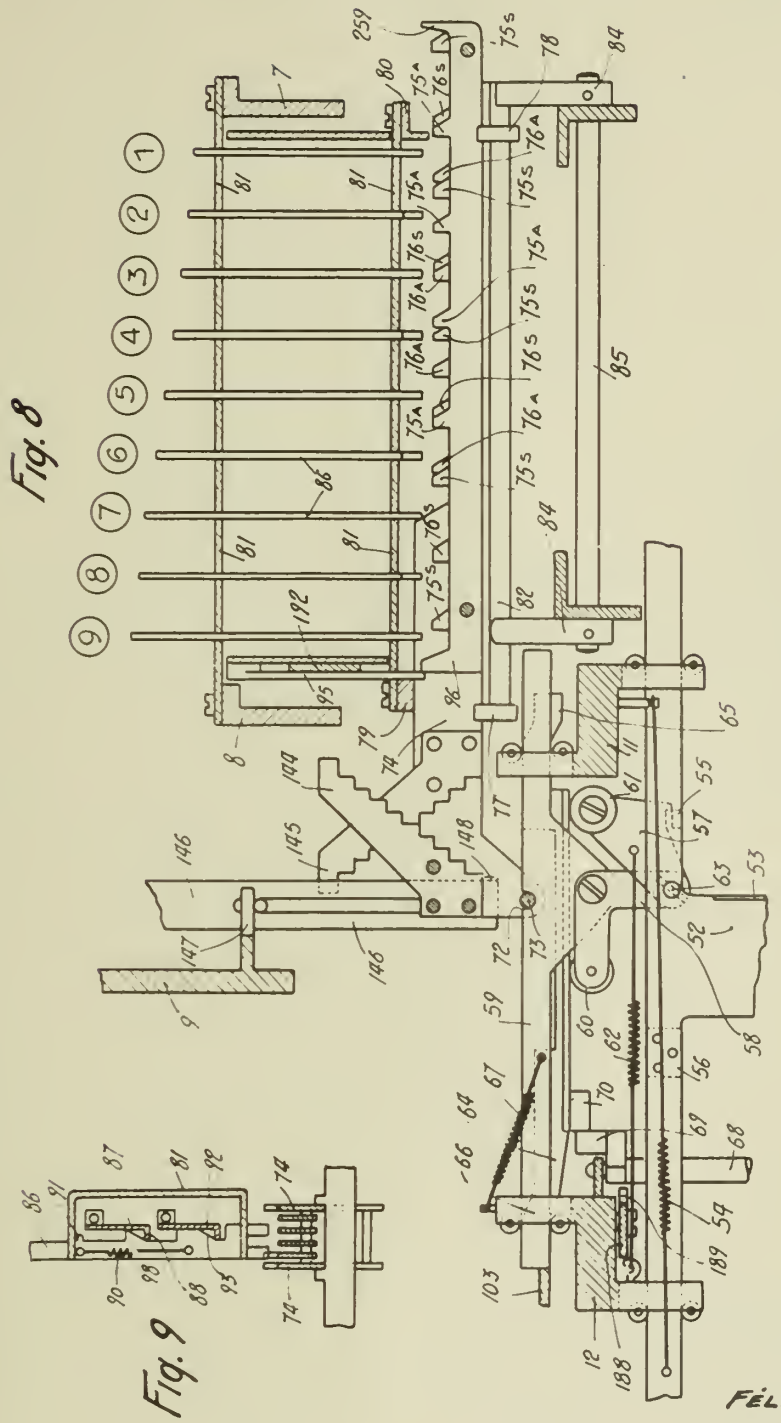

Fig. 8

Fig. 9

INVENTOR
FÉLIX PAPPÉ,

BY Allen & Allen
ATTORNEYS

PUBLISHED
MAY 25, 1943.
BY A. P. C.

F. PAPPÉ
CALCULATING MACHINE
Filed Feb. 1, 1940

Serial No.
316,824
11 Sheets-Sheet 6

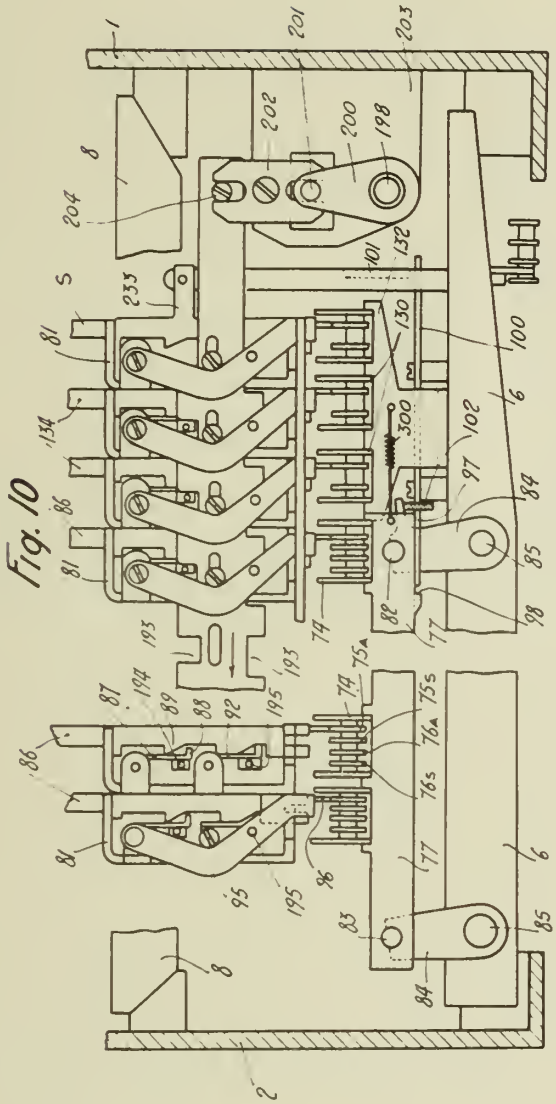

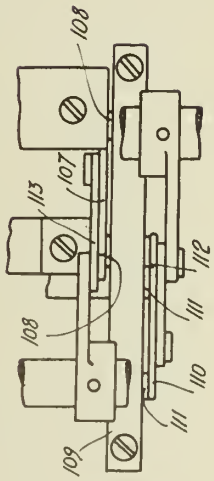

INVENTOR
FÉLIX PAPPÉ,

BY Allen & Allen
ATTORNEYS

PUBLISHED
MAY 25, 1943.
BY A. P. C.

F. PAPPÉ
CALCULATING MACHINE
Filed Feb. 1, 1940

Serial No.
316,824
11 Sheets-Sheet 7

Fig. 13

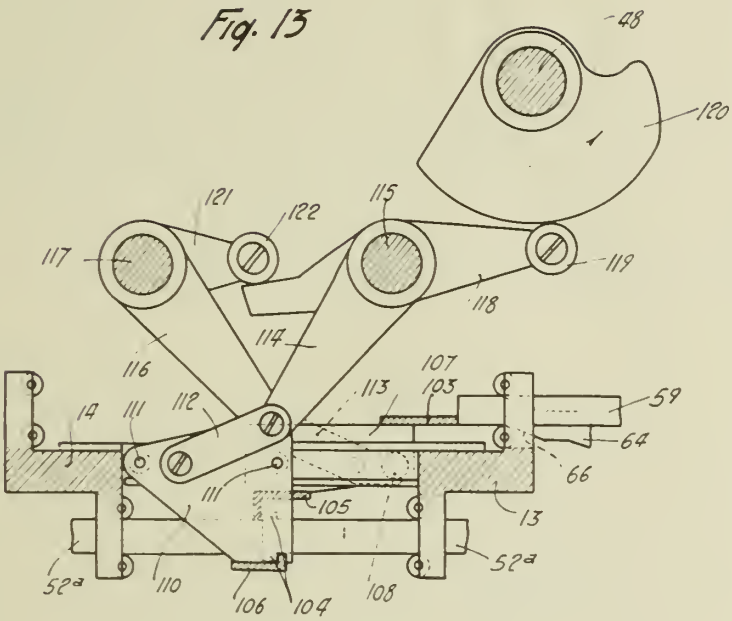

Fig. 15

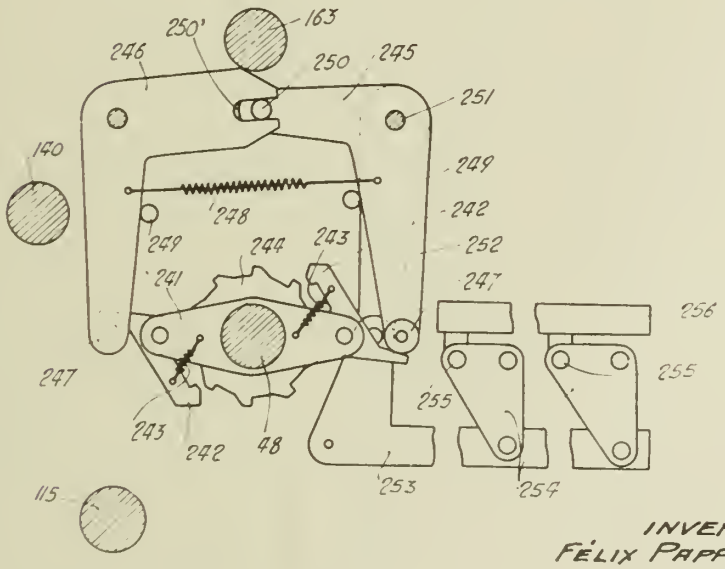

INVENTOR
FÉLIX PAPPÉ,

BY Allen & Allen
ATTORNEYS

PUBLISHED

MAY 25, 1943.

BY A. P. C.

F. PAPPÉ

CALCULATING MACHINE

Filed Feb. 1, 1940

Serial No.

316,824

11 Sheets-Sheet 8

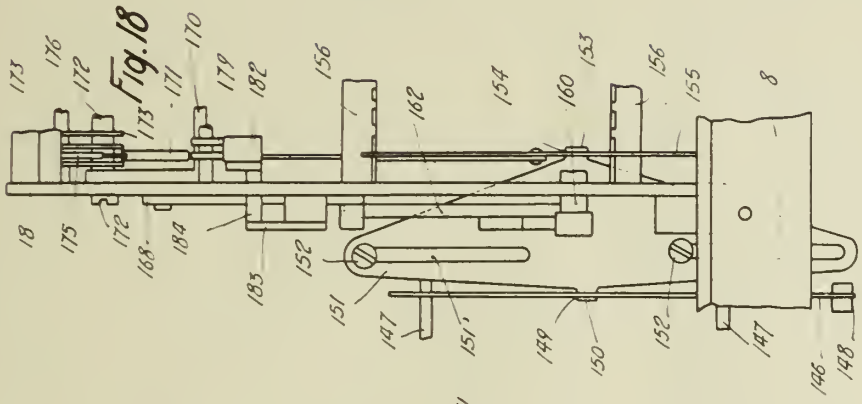

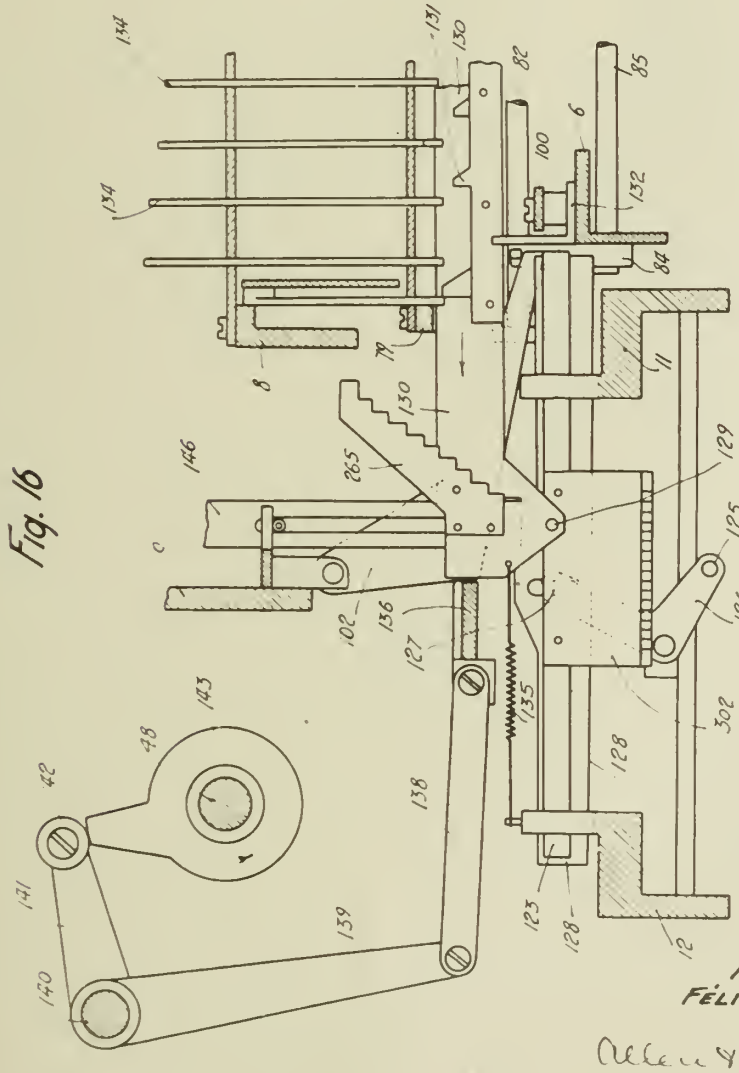

INVENTOR
FÉLIX PAPPÉ,

BY Allen & Allen
ATTORNEYS

PUBLISHED
MAY 25, 1943.
BY A. P. C.

F. PAPPÉ
CALCULATING MACHINE
Filed Feb. 1, 1940

Serial No.
316,824
11 Sheets-Sheet 9

Fig. 17

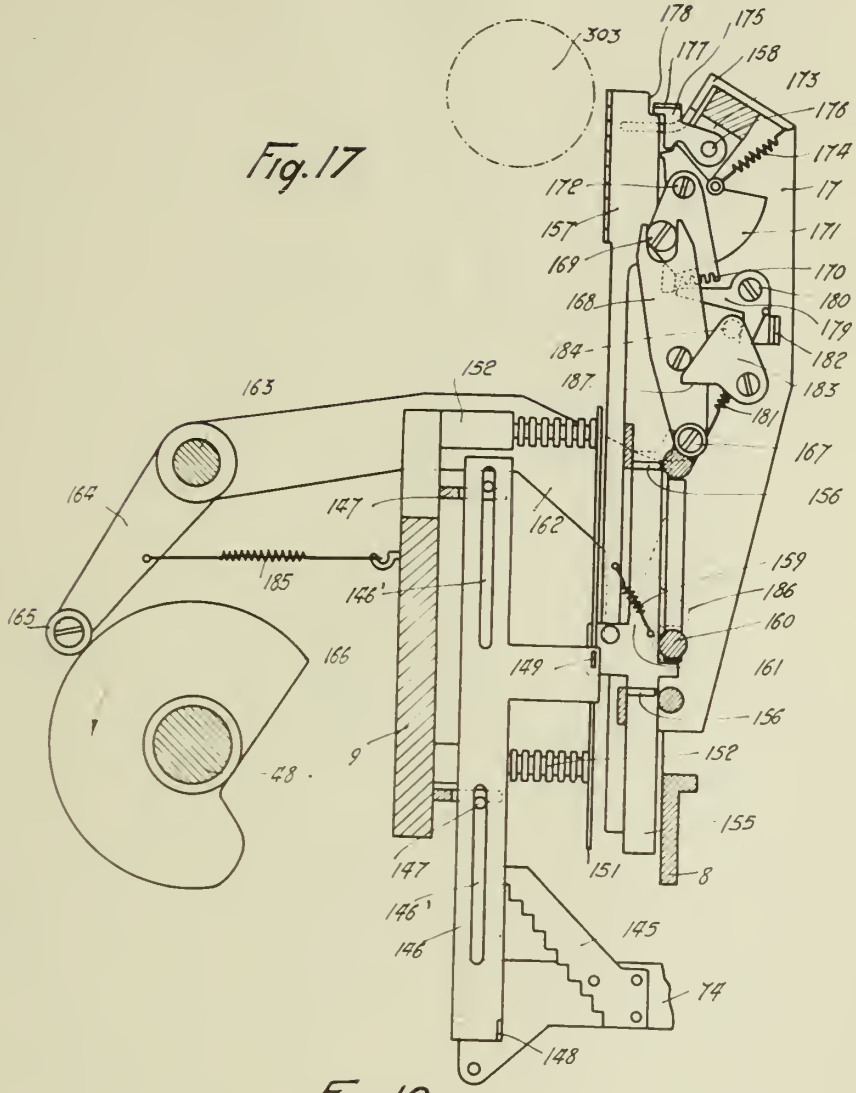

Fig. 19

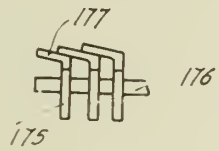

INVENTOR
FELIX PAPPÉ,

BY Allen & Allen
ATTORNEYS

PUBLISHED

MAY 25, 1943.

BY A. P. C.

F. PAPPÉ

CALCULATING MACHINE

Filed Feb. 1, 1940

Serial No.

316,824

11 Sheets-Sheet 10

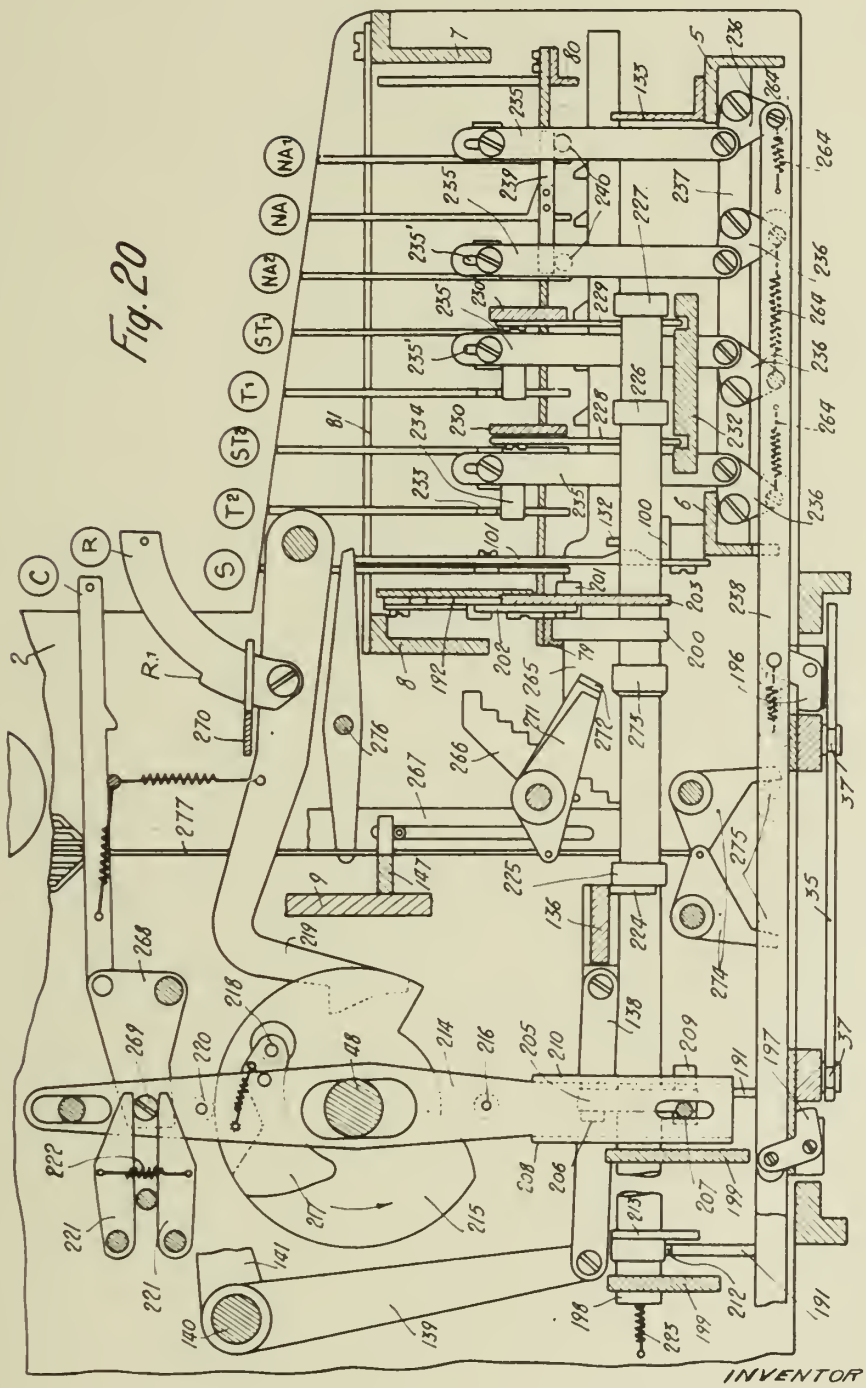

INVENTOR

Félix Pappé,

BY

Allen & Allen

ATTORNEYS

PUBLISHED
MAY 25, 1943.
BY A. P. C.

F. PAPPÉ
CALCULATING MACHINE
Filed Feb. 1, 1940

Serial No.
316,824
11 Sheets-Sheet 11

Fig. 21

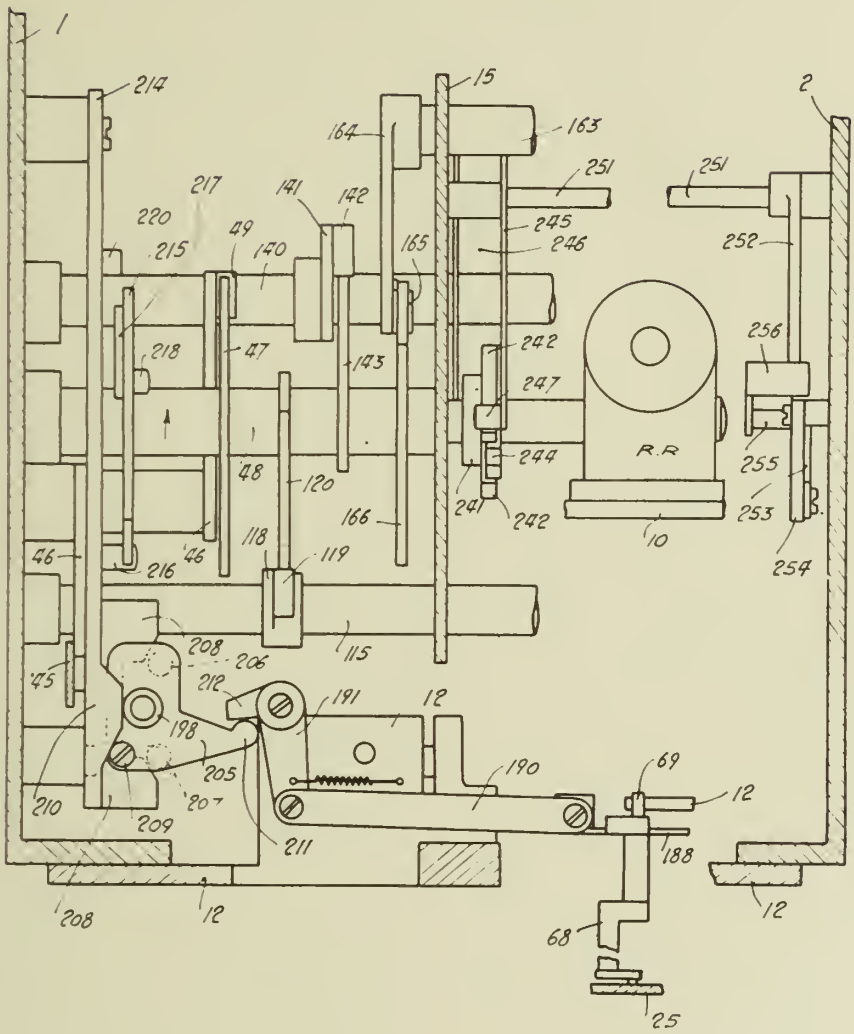

INVENTOR
Félix Pappé,

BY Allen & Allen
ATTORNEYS

Published May 25, 1943

Serial No. 317,139

ALIEN PROPERTY CUSTODIAN

SNOW SCREENS

Poul Tholstrup, Roskilde, Denmark; vested in the Alien Property Custodian

Application filed February 3, 1940

The present invention relates to an improved snow screen for preventing the collecting of snow in drifts.

It is commonly known to erect snow screens for preventing the drifting up of snow on railway lines and on roads. Such screens usually comprise elements arranged with a suitable spacing through which the air current and a part of the drifting snow may pass, and which space serves to reduce the speed of the current of air to such a degree that the major portion of the drifting snow drops behind the screen.

Such screens are erected temporarily at wintertime along great distances, and the practical value of them is thus not only dependent on their ability to retain the drifting snow, but likewise on the costs incurred in their production, and the facility of their erection and subsequent removal, as well as their durability. Various forms of snow screens have been proposed, as for instance screens made of a number of wooden bars arranged mutually parallel in vertical, horizontal or oblique rows, or arranged crosswise to each other, and fixed in any suitable manner with a suitable spacing between the separate bars. These snow screens of known construction are comparatively expensive, and experience shows that they do not provide a screening effect such as is obtained by means of screens or hedges consisting of elements having a surface that offers greater air resistance than the comparatively smooth bars.

Screens made of plaited material such as rope or the like are likewise known, but they are more expensive in production than the above described screens of wooden bars, and they are very heavy to handle while erecting or removing the screens.

The object of the present invention is to provide means for producing a snow screen that is cheap in production, in transport, and in erection and removal. The snow screen according to the invention is mainly characterized by the combination of a number of bands having a brush-like surface, and a number of posts, on which the bands are attached in rows above each other and relatively spaced, and substantially parallel to the soil in which the posts are inserted in vertical position.

The bands employed in such snow screens are according to the invention made of straw or wood-flock or similar material. The material employed is twisted in known manner to form a rope-like element. Alternately the straw may be sewn or in any other suitable manner assembled with a rope, which serves as the carrier of the band.

Bands of this kind are exceedingly easy to make, and they are very light, and accordingly are easy to apply to and remove from the posts, which are provided with carrier members for this purpose.

In order to increase the durability of the bands, when intended to be employed for instance for more than a single winter, the material employed may be impregnated in any suitable known manner.

The invention is illustrated in the accompanying drawing, in which

Fig. 1 is a side elevation of a snow screen,

Fig. 2 a vertical section through the screen, shown in Fig. 1, and

Fig. 3 a modified construction of a straw band for a snow screen according to the invention.

Referring particularly to Figs. 1 and 2, the numeral **1** indicates a band member made of straw and attached to a number of posts **2** by means of carrier members. These members each comprise a block **3** affixed to the post and provided with an incision **4**, into which the band **1** is inserted laterally while erecting the screen. The blocks **3** are arranged on each post in such a manner that the desired spacing between the bands after their insertion within the incisions may be obtained.

Preferably the lower end of each post is provided with a spade-like widening **5**. When inserting this end of the post into the soil, the widened part lies in the longitudinal direction of the screen. In this manner it is possible to provide a comparatively great resistance against the upsetting of the screen, even if posts of a light construction are employed. Furthermore the driving of the posts into the soil is facilitated.

Instead of employing straw in the manufacture of the bands there may be used a material as wood-flock. As an alternative there may be used straw which by sewing or other means of attachment is fastened to a rope or line that serves as carrier member for the band. In Fig. 3 there is shown a portion of such a band, in which **6** indicates the carrier rope, to which there is affixed transversely disposed rows of short straw.

Through experiments it has been found that the rows of bands should cover about one half of the surface area of the screen, so that accordingly the space between the bands will substantially correspond to the cross section of a band, taken on a vertical plane. The brush-like bands suspended between each pair of posts have a

considerable checking effect on the current of air passing through the screen, and owing to the swinging of the bands brought about by the wind, there are caused whirls in the air to the effect that the drifting snow is thrown to the ground, where it remains. Furthermore the swinging of the bands has the effect that the snow cannot cling to the bands and thus alter the brush-like character thereof to a smooth surface.

The costs of production of the bands will normally be so small that after removal they may be burned, and only the posts are stored until again to be used.

POUL THOLSTRUP.

PUBLISHED

MAY 25, 1943.

BY A. P. C.

P. THOLSTRUP

SNOW SCREENS

Filed Feb. 3, 1940

Serial No.
317,139

Fig. 1.

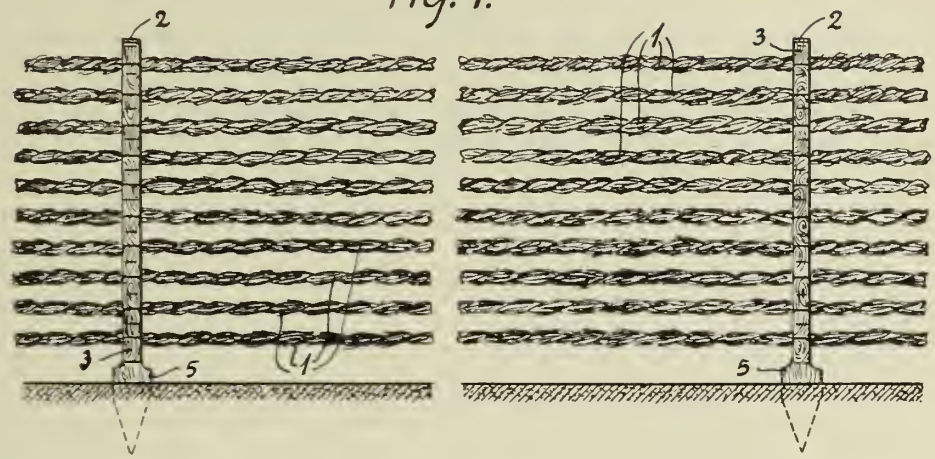

Fig. 2.

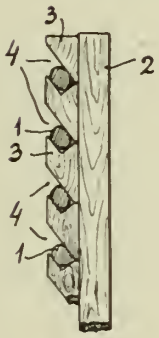

Fig. 3.

Inventor.
Poul Tholstrup

Published May 25, 1943

Serial No. 317,206

ALIEN PROPERTY CUSTODIAN

METHOD OF MIXING OR GRANULATING OF PULVERULENT AND PLASTIC MATERIALS OF ALL KINDS

Ludwig Eirich, deceased, late of Hardheim, Baden, by Gustav Eirich, Ludwig Eirich, Walburga Eirich, Maria Hollerbach nee Eirich, Rosa Eirich, Johanna Eirich, Anna Eirich, heirs at law, Hardheim, Baden, Germany, and Joseph Eirich, Hardheim, Baden, Germany; vested in the Alien Property Custodian

Application filed February 3, 1940

The invention relates to a method for converting powdery up to finely grained masses into a strewable material consisting of practically uniform ball shaped grains of small diameter. Very many substances which up to the present have been employed in the technics in powdery up to finely grained form possess inconveniences resulting from this special form of condition.

In the case of mixtures of different solid substances the danger exists, that the mixture during the transport or during the handling separates completely or partly. This is the case for instance with Portland-cement-raw mixtures produced in dry state, glass mixtures for melting glass, artificial manures, pharmaceutical preparations.

In other instances when powdery single substances are to be treated, there exists frequently the tendency to caking and to forming lumps, particularly when they are stored a longer time, and for using these substances power must again be expended for the division of the material.

A further inconvenience of powdery substances is that losses due to the substances becoming dusty occur, this being very disturbing especially in the case of dry mixtures of different substances, as the losses alter in a disagreeable manner the composition of the mixture.

The invention offers the possibility to obviate all these inconveniences.

By the method according to the invention the powdery up to finely grained initial substances are converted into a physical state of a special kind, namely into the shape of practically uniformly spherical grains. The products according to the invention are free from powdery substances, so that losses by becoming dusty can no longer occur. By the formation of the granulated material in which every single grain, when a mixture is present, contains the individual constituents in the desired proportion and in intimate mixture, separation cannot occur anymore. Also caking is impossible as the uniform ball-shaped grains touch each other only at points. The strewing capability and preserving in this condition is thus secured even after long storage.

The conversion of the powdery up to finely grained material into a practically uniform spherical and strewable granulated material is effected according to the invention in that the powdery up to finely grained initial substances are brought on to an essentially plane support and treated on this support, which is moved planet-like relative to the material, with the aid of tools, regulated quantities of a medium in finely distributed form having an agglomerating effect being added during this treatment. As support serves preferably a mixing plate or a flat shallow mixing cup which may be rotatable about its centre. In the method according to the invention the manner of the treating by the tools circulating in long planet-like courses is very material. Thin knives, of which several are arranged the one parallel at the side of the other, serve for this purpose. These knives can circulate, about a vertical axle arranged eccentrically to the plate axle, at high speed, whereas the plate rotates in opposite direction. If desired, the plate may be stationary, and a planet movement may be imparted to the tools, for instance by conducting the knife-shaped tools circulating about the vertical axle on a closed path eccentrically to the axle of the mixing plate. The planet movement of the knives relative to the material to be mixed may be produced, however, in any other manner. By the form, arrangement and manner of operation of the apparatus for the treatment, the material to be treated is continually divided in changing directions into narrow strips and turned over.

As regards the effect and the individual measures essential for the method according to the invention the following has to be said:

A plate, substantially plane, rotating about a vertical axle is of advantage for holding the material to be treated, in order to exclude any disturbances which might result as effect from the gravitation. The material to be treated must remain at rest during the treatment and carry out only the movements which are imparted to it by the rotating plate and by the treating tools.

The shape of the treating tools are narrow knives is important because caking occurs when a substance is added to the powdery mass which exerts an agglomerating effect, this mass being then cut through and divided only by a thin tool. It is necessary that the tools circulate at high speed in order to attain the desired division even if the masses are dense or become dense during the treatment.

It is of advantage to arrange several knives parallel the one to the other after the manner of a rake or of a comb in order to obtain a strewable material of small grain diameter.

To the knives arranged rake-like a movement has preferably to be imparted which is directed opposite to the direction of the plate rotation. In this manner curved courses intersecting the one the other in the most favorable manner and

the most rapid effect of grain formation are thus obtained.

The knives may be shaped slightly wedge-like and exert then, upon the material which has just been cut through by the cutting edge, such an effect that this material is thrown over towards both sides.

An oblique position of the knives is admissible besides and instead of the wedge-like shape of the same, so that the cutting edge is directed forward, cuts the material during the circulation of the knife, and one of the broad sides exerts then a throwing-over effect.

If the knives work only with their cutting edges, a uniform mixing and division without pressing effect is exerted. For material, which does bind with difficulty, it is advisable to produce a certain pressing effect of the tools by giving to the knives an oblique position relative to the direction of movement. A thick knife exerts also a stronger pressing action than a thin knife.

The thickness of the layer of the charge to be granulated depends on the properties of the mass. Material possessing little sticking force is treated in a comparatively thick layer of about 25 to 50 cm, so that the knives exert a certain pressing effect which is favourable for the compression and for the grain formation. This is valid also for meagre material, which has to be granulated with little binding medium and little liquid.

Different other materials, for instance compressible porcelain mass, in which the kaolin is moistened with a mixture of water and oil, behave quite differently. The granulated mass must further possess a grainy drizzling character, in order that the dies of the press can be easily and uniformly filled with this material. On the other hand, the mass must contain so much water that, during the pressing proceeding, the material in excess brought into the mould swells over through the overflow slots of the press ram, as otherwise shaped bodies of irregular size are produced. Such a mass strongly moistened in this manner is very sensitive against pressing, so that the granulating process must be carried out with moderate thickness of layer for instance of about 2 to 3 cm, in order to bring on the one hand the required quantity of water into the material and on the other hand to still preserve the fine granulated consistency.

For the production of a medium coarse or very coarse granulation, the material can first be converted into plastic consistency by strong moistening and then, by addition of powderous material within the granulating machine, the degree of moisture can be reduced. In this manner substantially denser granulated bodies are obtained than when powderous material is gradually moistened.

Water. solutions of binding agents, salt solutions, oil, tar and sulfite waste liquor may be used as media exerting an agglomerating effect.

If masses are present, which contain water binding substances, for instance masses which have a content of clay, or salts soluble in water or crystal water binding salts, the simplest and easiest agglomerating medium is water. The use of this substance is advisable for the treatment of Portland cement- raw mixtures, for artificial manure, for glass mixtures.

In other instances it may be advisable, to employ the solution of a binding agent, for instance a solution of waterglass, of lime, dextrine and so forth. In a third instance the use of oil or tar is recommended as binding agent, for instance for the granulation of lime "nitrogen".

As salt solutions which may be employed calcium chloride solution and magnesium chloride solution may be mentioned.

Fundamentally it has further to be stated, that by dimensioning the quantity of the medium exerting an agglomerating effect and at the same time adjusting of the circulating speed of the treating tools it is possible to adjust the size of the granulated material to be produced. If a small grain is desired, high circulation speed of the tools and addition of small quantities of agglomerating substances are to be employed.

If a coarser grain is desired, the circulation speed of the tools must be less great and/or larger quantities of substances have to be added which exert an agglomerating effect.

The method according to the invention may be further explained by the following examples:

The treating apparatus consisted of a circulating mixing plate, above which two knife rakes, each having three knives, circulated about a vertical axle eccentric to the axle of the mixing plate.

5 kg of superphosphate and 5 kg of ammonium sulfate ground as usual in commerce were charged on to the plate. The substances were first worked through on the plate during one minute by means of the tools. The revolving speed on the driving shaft amounted to 300 revolutions per minute.

Water was then added with the aid of a spraying nozzle, in all about 0.9 kg of water within five minutes. During these five minutes the treatment with the circulating knife-tools was continued. The total charge assumed a fine gravelly state.

When lengthening the time of treatment to in all 6 minutes slightly coarser granules were obtained.

By increasing the water quantity to 1.1 kg and by lengthening the treating time by further 50 seconds a medium-coarse granulated material was obtained.

At a second experiment the circulation speed of the driving shaft was reduced to 220 revolutions per minute. 15 kgs. of dry cement raw flour was charged upon the plate. 2.7 litres of water were sprayed into the material within five minutes, and the mass at the same time treated by means of the circulating knife-tools. The water supply was then cut off and the material treated again for 2 minutes, wherefrom resulted a considerable enlargement of the granules formed.

A control by spraying in further 200 grs. water showed, that the capability of the material to absorb the agglomerating medium was already exhausted. In this instance 1 kg. of dry raw flour was added and the treatment continued for further 2 minutes. Also in this instance a granulated material was formed, which consisted exclusively of uniform grains.

Reduction of the number of revolutions to 150—measured on the driving shaft—per minute resulted in a gradual increasing of the granulation.

From the description of these experiments can be seen, that the treatment period is dependent on the time during which the granulated mass absorbs the sprayed-in moistening liquid and develops its adhesive force.

Employment of longer treating periods makes it possible generally that the smallest possible quantity of moistening liquid is sufficient.

It has finally to be added, that the method according to the invention affords also the possibility, to combine the mixings of several powderous single substances and to transform this mixture into uniform, fine-granulated material. As has been shown in the above first example, a dry mixture had been produced first from the single substances and then, with addition of the agglomerating medium, and in the same apparatus, the dry mixture was transformed into a uniform granulated material.

In the accompanying drawing the arrangement necessary for carrying out the invention is illustrated in several forms of construction.

Fig. 1 shows in top plan view an arrangement for carrying out the method according to the invention.

Fig. 2 shows a similar arrangement in side elevation and part section.

Fig. 3 shows in top plan view another arrangement which is also suitable.

Fig. 4 shows on larger scale in top plan view and partly in section a special configuration of a treating tool in the arrangement shown in Fig. 1 or 3.

Fig. 5 shows in side elevation the arrangement and configuration of the knife serving for the treatment.

Fig. 6 shows in top plan view an other configuration of the treating tools adapted to be used for the method according to the invention.

In the figures *a* designates the container, in which the granulating of the material has to take place. This container has an almost plane bottom with a central opening *b* adapted to be closed by a lid.

The cylindrical container for the treatment is rotatable and rests, with this object in view, on supporting rollers *c* which are fixed on supports *d*. The driving elements of the container are not shown on the drawing. The drive can be effected in any suitable known manner, for instance by spur wheels.

e designates the axle which is arranged eccentric to the centre of the plate of the container for treatment, and about which axle the treating tools circulate which are fixed on separate supports. Also the drive of this eccentric shaft or of the treating tools is not especially shown in the drawings. The drive can be effected by means of spur wheel transmission, by directly coupled engine, by belt pulleys or the like in a manner known per se.

The tools for the treatment, which are shown in Fig. 5 on an enlarged scale, consist of knives *h* which, as indicated at *k*, have a sharp cutting edge. These knives are fixed on the supports *g* by means of screws *i*, the supports in turn being fixed by means of the arms *f* on the shaft *e*.

According to Fig. 4 the knives are elastic and adjustable. The arm *f* is connected with a spring casing *m* in which a torsion spring *n* is arranged which in turn is connected with the arm *l*. The knife support *g* can be moved by a hinge o about the arm *l*. Care has been taken, that these knife supports can be secured in any desired position by means of a screw *p* and a screw nut *p'*.

Fig. 6 shows another construction of the knife supports which is carried out after the manner of a wheel and composed of a ring *r* connected by an arm *q* with the eccentric shaft *e*. Knives *h* with cutting edges *k* are adjustably connected with the ring *r* and also with the arms *q* and can be secured in position by means of screws *s*.

The direction of rotation of the container and of the tools for treatment is indicated by arrows in the Figs. 1, 3, 4 and 6. The position of the knives must in all cases be such, that the cutting edges are forwardly directed in the direction of movement, that is cut, during their circulation, through the material to be treated. A slight inclination of these knives to the direction of movement is admissible, in order to turn over the cut material to be treated.

GUSTAV EIRICH.
LUDWIG EIRICH.
WALBURGA EIRICH.
MARIA HOLLERBACH, NEÉ EIRICH.
ROSA EIRICH.
JOHANNA EIRICH.
ANNA EIRICH.
Heirs at law of Ludwig Eirich, deceased.
JOSEPH EIRICH.

PUBLISHED

MAY 25, 1943.

BY A. P. C.

L. EIRICH

METHOD OF MIXING OR GRANULATING OF PULVERULENT AND PLASTIC MATERIALS OF ALL KINDS

Filed Feb. 3, 1940

Serial No. 317,206

2 Sheets—Sheet 1

Fig. 1.

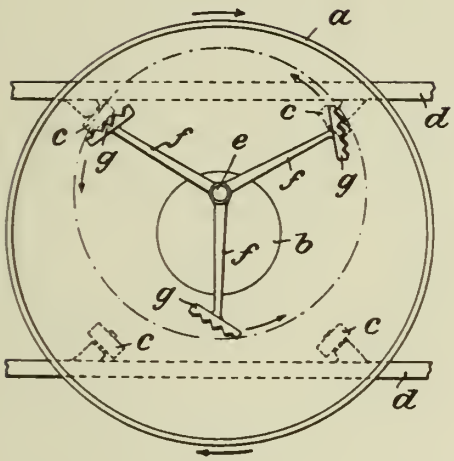

Fig. 3.

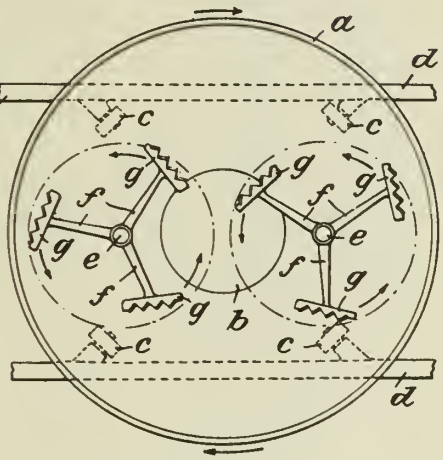

Fig. 2.

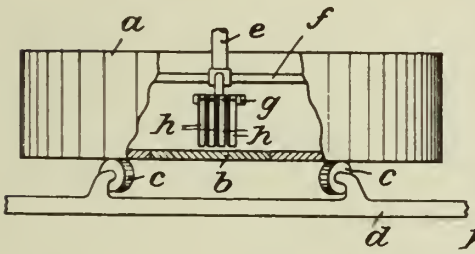

Fig. 6.

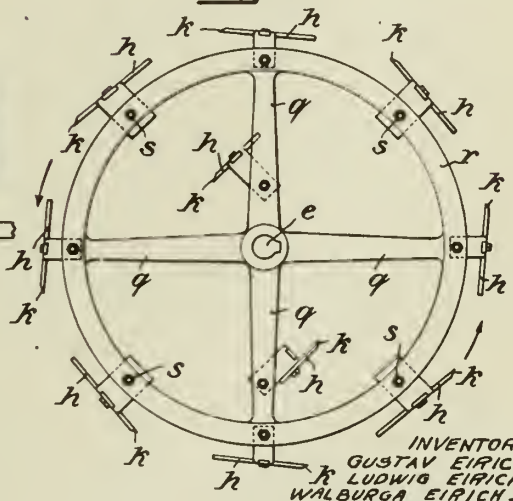

INVENTORS:
GUSTAV EIRICH,
LUDWIG EIRICH,
WALBURGA EIRICH,
MARIA HOLLERBACH NEE EIRICH,
ROSA EIRICH,
JOHANNA EIRICH,
ANNA EIRICH,
JOSEPH EIRICH,

Bailey & Larson

Attorneys

PUBLISHED

MAY 25, 1943.

BY A. P. C.

L. EIRICH

METHOD OF MIXING OR GRANULATING OF PULVERULENT AND PLASTIC MATERIALS OF ALL KINDS

Filed Feb. 3, 1940

Serial No. 317,206

2 Sheets-Sheet 2

Fig. 4.

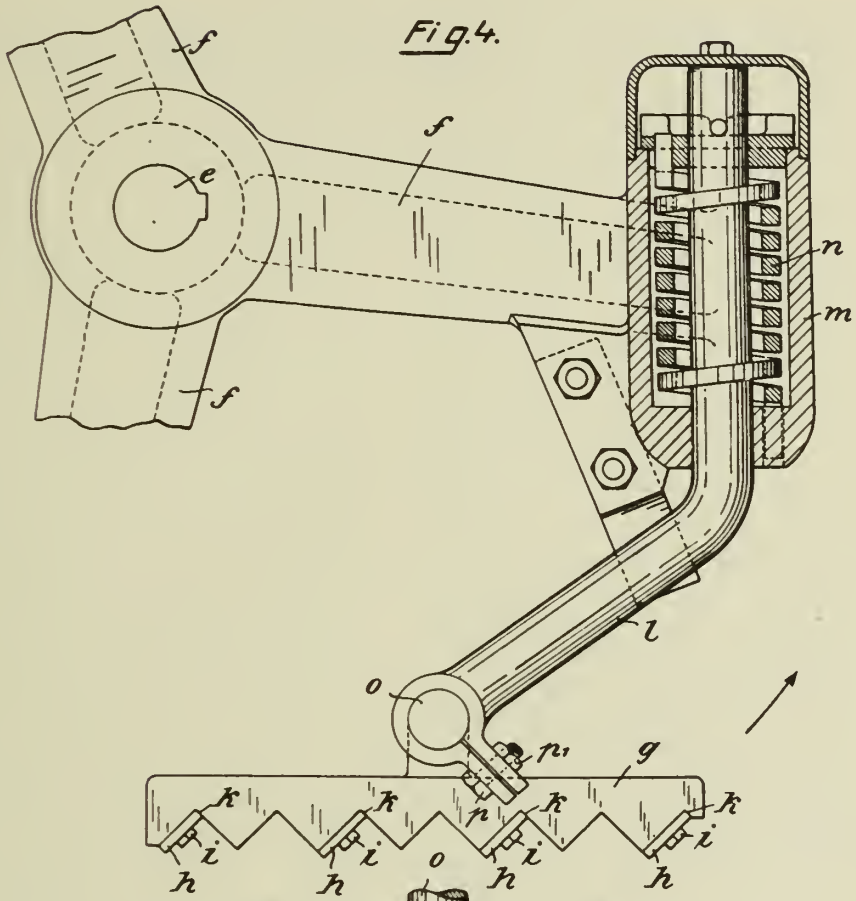

Fig. 5.

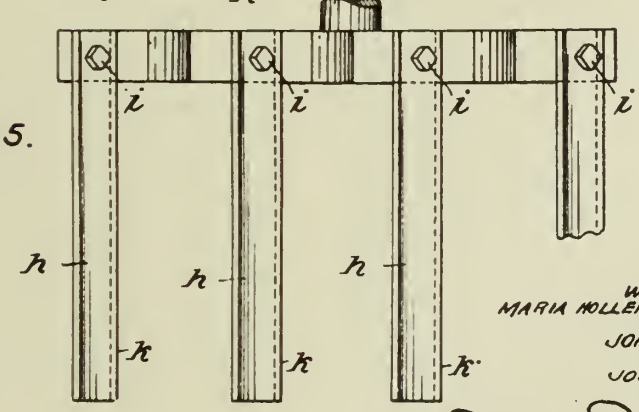

INVENTORS:
GUSTAV EIRICH,
LUDWIG EIRICH,
WALBURGA EIRICH,
MARIA HOLLERBACH NÉE EIRICH,
ROSA EIRICH,
JOHANNA EIRICH,
ANNA EIRICH,
JOSEPH EIRICH,

Bailey & Carson
Attorneys

Published May 25, 1943

Serial No. 317,610

ALIEN PROPERTY CUSTODIAN

ELECTRICAL HEATING DEVICES

Georg Barth Mossin, Oslo, Norway; vested in the Alien Property Custodian

Application filed February 6, 1940

The present invention relates to a device mainly for heating the walls and eventually also the ceiling and/ or the floor in rooms by means of electrical current. The device also may be used for other purposes, for instance drying purposes.

The main characteristic feature of the invention is, that the walls and eventually the ceiling and/or the floor of the room or parts of the walls etc. are provided with suitable conductors serving as heating bodies, the conductors being attached directly to the inner surface of the walls etc. or inside the surface, said conductors consisting of resistance wire or metal foil, for instance aluminium foil.

According to the invention the said conductors on the one or both sides may be provided with paper, cloth or the like before the conductors being attached to the wall etc., and the heating bodies thus formed may be covered by a coating of a suitable material. The conductors also may be attached to the hangings or coatings adapted to cover the walls etc.

For obtaining a great effectivity it is of importance, that the walls etc. outside the conductors are effectively insulated against conduction of heat, the walls etc. before the fitting up of the conductors being provided with one or more coatings of heat insulating material, for instance fibre plates or the like. The conductors, preferably metal foil, also on beforehand may be attached to such insulating plates, and the heating elements thus constructed either may be used as ordinary electric stoves or may be attached to or mounted inside the walls etc. of a room.

A further feature of the invention is, that thermostats are used, by means of which the temperature of the walls etc. automatically is kept higher than the temperature of the air in the room.

Still further important features of the invention will appear from the following description of an embodiment of the device.

In order to describe clearly my invention I will refer to the accompanying diagrammatical drawing, wherein:

Figure 1 shows a vertical transverse section through a wall provided with the present heating device, and

Figure 2 shows a vertical transverse section through a floor, this floor also forming the ceiling in the room below.

Figures 3 and 4 show transverse sections through a part of a hanging and paper respectively provided with heating bodies of metal foil.

Figure 5 and 6 show a front view of a part of the inner side of a wall and of a hanging or the like provided with metal foils of different shapes. In these figures the paper etc. fixed in the foils are removed.

Figure 7 shows a section through an insulating plate, the one side of which being provided with metal foil.

Figure 8 shows a section through a room with thermostats adapted to regulate automatically the temperature of the walls and the air respectively.

In Figure 1 the outer masonry wall is indicated by 1, the inner surface of which, facing towards the room, being provided with plastering 2. Inside this plastering is placed a heat-insulating material 3 consisting for instance of suitable insulating wall-boards, say plates of fibre, kivron, cement- asbestos, sea-weed, glass wadding or cork or a combination thereof. Directly on this insulating material are mounted heating bodies 4 consisting for instance of resistance wire passing in suitable windings along the wall. The insulating material eventually may be provided with open grooves, in which the resistance wire is placed. The side of the heating bodies facing towards the room is covered by a thin layer 5 consisting of tapestried hanging, paper-hanging coating, veneer or the like.

In Figure 2 is shown a floor and ceiling respectively, and 6 indicates the concrete flooring, 7 timber bricks and 8 a wood flooring. This wood flooring is covered by a heat insulating plate 9, on which the heating bodies 10 are placed. These heating bodies are covered by the flooring 11, which may consist of rubber, linoleum, parquetry, pressed fibre plates or the like. Below the concrete flooring 6 is placed an insulating plate 12, to which the heating bodies 13 are attached. These heating bodies may be covered by cardboard, coating or the like 14 forming the inner surface of the ceiling.

The heating bodies eventually may be attached to the said insulating plates before the attachment of the plates to the wall etc., the attachment of the heating bodies to the plates suitable being made in the factory. Thereby the plates will serve as heating elements, which if wanted can be used as ordinary electric stoves. The heating bodies also on beforehand may be attached to the hanging and the floor and ceiling covering respectively, said heating bodies eventually being mounted in grooves pressed in the hanging etc. The attachment may be effected by pasting paper or the like outside the heating bodies.

It will be seen, that when the devices shown in Figures 1 and 2 are used, practically all the heat produced in the heating bodies will be transmitted to the room, the heat transmission outwards through the wall being negligible in relation to the heat transmission to the room. For obtaining a good heat utilization it of course also is important, that the doors and windows are being effectively tightened.

In the above said it is provided, that the walls etc. are especially good insulated by means of fibre plates and the like before the mounting of the heating bodies, such insulation of course being of great importance for obtaining a good heat economy. However, the heating bodies also may be attached directly to the walls etc. already existing. In this case the heat bodies may be attached to a layer consisting of paper, cloth or the like or mounted between two layers before the attachment of the same to the wall etc. After the attachment to the wall the heating elements may be covered by a thin plastering or the like.

Instead of using resistance wire the heating bodies suitably may consist of metal foil of a suitable thickness, for instance foil of aluminium, copper, iron or an alloy. This foil, shaped as suitable sheets or strips, is fixed to the walls etc. or to the hangings or the like and the floor and ceiling covering respectively or also to the insulation plates. Figure 3 shows a section through a hanging **15**, to the one side of which the metal foil **16** is fixed by pasting or the like. The foil is covered by paper **17** or the like, which forms the surface facing towards the room. The hanging can be provided with such a foil in the factory.

As shown in Figure 4 the metal foil **16** serving as a heat body may be attached only to a sheet of paper **18**. This paper eventually may face towards the wall, and the foil after the attachment to the wall etc. may be covered by hangings, coatings etc.

According to Figure 7, which shows a section through an insulating plate **19**, for instance a fibre plate, the heating bodies **20**, which suitably may consist of metal foil, are attached to the one side of the plate. In this case the foil may be attached to a layer of paper, cloth or the like or may eventually be enclosed between two layers, whereafter the entire heating body is fixed to the insulation plate. The plates thus will form heating elements, which may be arranged next to each other on the walls etc. The plates also may be arranged without being connected to the walls and thus be used as ordinary panel stoves. In this case both sides of the plates may be provided with metal foil.

As shown in Figure 5 the metal foils **22** attached to the wall, hanging, insulation plate etc. **21**, may have a relative great area. The foils also may be shaped as narrow strips **23** as shown in Figure 6, the strips for instance being zigzag-shaped. In Figures 5 and 6 the layer of paper etc., which shall cover the foils, is supposed to be removed.

The conductors serving as heating bodies suitably consist of more sections, which may be connected in series and in parallel as desired. The heating bodies may be connected to any suitable source of current, for instance an ordinary power current network. The voltage in such a network, however, is relatively high, ordinarily about 220 volts, and the heating bodies therefore must be effectively insulated. Owing to this fact it will be of advantage to use a relative low voltage, preferably not exceeding 35 volts, which may be obtained by connecting the heating elements to the secondary side of a suitable transformer, the primary side of which is connected to the current network. More transformers or a transformer with more secondary windings eventually may be used in order to make it possible to vary the voltage. Neither the transformer nor the connections of the heating bodies, however, are shown on the drawing.

By the heating device above described the walls, the ceiling and the floor of a room will be heated, and heat is transmitted to the air in the room. The fact is, however, that the highest feeling of pleasantness is obtained when the temperature of the air in the room is lower than the temperature of the walls etc. In order to obtain a heat distribution corresponding hereto a thermostat **25** may be used, placed for instance on the wall of the room **24**, Figure 8, said thermostat only being influenced by the temperature of the wall. This thermostat is adapted to keep the temperature of the walls etc. constant by automatic opening and closing of the current circuit or by variation of the voltage. Besides the thermostat **25** also a thermostat **26** is used which is influenced only by the temperature of the air in the room and is adapted to effect automatically the opening and closing of an air valve **27** or the regulation of a suitable cooling device so as to cause the air temperature to be kept constantly on a lower value than the temperature of the walls etc. A suitable temperature of the walls may be for instance 22° C. and the corresponding air temperature for instance 14° C.

More thermostats placed in different parts of the room eventually may be used, and the thermostats may be of any suitable type.

GEORG BARTH MOSSIN.

PUBLISHED
MAY 25, 1943.
BY A. P. C

G. B. MOSSIN
ELECTRICAL HEATING DEVICES
Filed Feb. 6, 1940

Serial No.
317,610

Fig. 1.

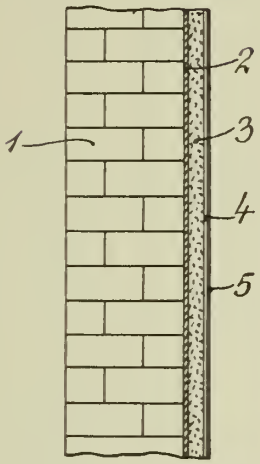

Fig. 2.

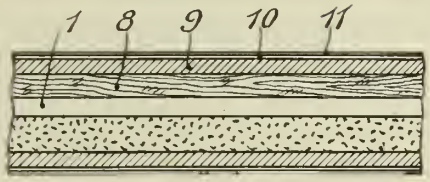

Fig. 3.

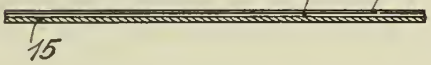

Fig. 4.

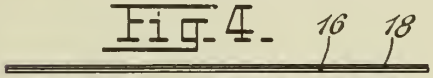

Fig. 5.

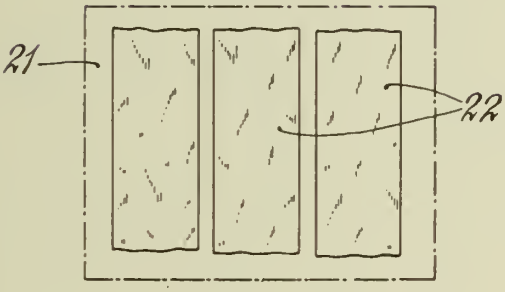

Fig. 6.

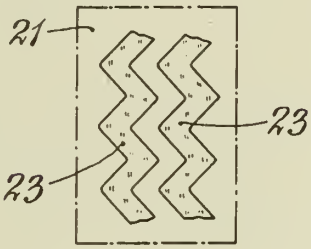

Fig. 7.

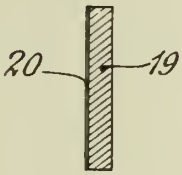

Fig. 8.

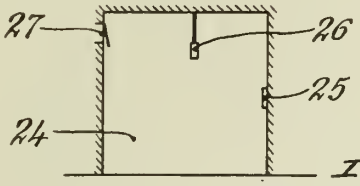

Inventor:
G. B. Mossin
By: Stern and Davis
Attys

Published May 25, 1943

Serial No. 318,343

ALIEN PROPERTY CUSTODIAN

DEVICES FOR AIRCHUTS

René Tauty, Clichy, France; vested in the Alien Property Custodian

Application filed February 10, 1940

The present invention relates to parachute equipments, and more especially to those of the harness type, that is to say including, in particular, a U strap forming a seat for the parachutist, with thigh straps.

The object of the present invention is to provide a device of this type which is better adapted to meet the requirements of practice than those used for the same purpose up to this time, and in particular with which release can be obtained in a safer and simpler manner.

According to the present invention, the harness as above set forth including central release means for acting from a distance on the thigh straps is provided with a belt and the release means are mounted on said belt, said means being adapted simultaneously to release the belt, the thigh straps, and, eventually, shoulder straps connected to said release means.

According to another feature of the present invention, the harness as above set forth, including means for releasing the thigh straps from a distance is arranged in such manner that the means for opening or releasing said last mentioned straps include control means running along the U strap and partly along the belt, when such a belt exists.

According to still another feature of the present invention, the harness as above mentioned, with central releasing means, is provided with thigh strap releasing means adapted to be operated, when so desired, for opening the thigh straps without operating the central release buckle.

According to still another feature of the present invention, the buckle of a quick release parachute gear is arranged in such manner that release is obtained by rotation of a control member, the latter being further adapted, in a harness, to release the thigh straps.

Other features of the present invention will result from the following detailed description of some specific embodiments thereof.

Preferred embodiments of the present invention will be hereinafter described, with reference to the accompanying drawings, given merely by way of example, and in which:

Fig. 1 is a diagrammatic perspective view of the whole of a harness made according to the invention and of the release means thereof, also made according to the invention;

Fig. 2 is a transverse sectional view showing separately, on a larger scale, the central release buckle of the harness of Fig. 1;

Fig. 3 is a sectional view on the line III—III of Fig. 5;

Fig. 4 is a sectional view on the line IV—IV of Fig. 5;

Fig. 5 is a sectional view on the line V—V of Fig. 3 or Fig. 4;

Fig. 6 is a front view of a device for securing the thigh straps, adapted to be controlled from a distance by means of the above mentioned central buckle;

Fig. 7 is a sectional view on the line VII—VII of Fig. 6;

Fig. 8 is a sectional view on the line VIII—VIII of Fig. 6.

I will now describe, with reference to the above mentioned Figs, a preferred embodiment of a parachute harness made according to the present invention.

This harness essentially includes, in the usual manner, a strap **1**, forming a U, the base or lower part of which is adapted to act as seat for the parachutist.

To this U strap, I combine the following elements:

a. On the one hand, a belt **2**, suitably connected to said strap, for instance sewn at **3**;

b. On the other hand, thigh straps **4**, which extend from the rear, where they are fixed to strap **1**, substantially at the middle part thereof, and are fastened at the front part to said strap **1**, at **5**, by means of releasable securing means, such as will be hereinafter described; and, preferably,

c. Shoulder straps **6**—**7**, the front portion **6** of which is, for instance, fixed to the belt or the buckle which will now be described, while the rear portion **7** is fixed to strap **1**, preferably at **5**, where the thigh straps are secured.

Being given such a system, or the like, I provide the belt with fastening means arranged in such manner as to permit, when they are operated to perform the release, of simultaneously opening the belt, the shoulder straps and the thigh straps, said thigh straps being closed through fixation means which are advantageously controlled, from the central fastening means above mentioned, through sheathed cables (of the same kind as those used for controlling the shutter of a camera) as it will be hereinafter supposed.

In the embodiment illustrated by the drawing, all these means are made as follows:

I make use of a buckle **8**—**11**, to which are fixed both the belt and the shoulder straps, that is to say one of the shoulder straps and one of

the ends of the belt are, for instance, permanently fixed to the buckle proper, or a piece 9, rigid therewith, (on the left hand side of the drawing) while the other shoulder strap and the other end of the belt are fixed to a piece 10 adapted, on the contrary to be fixed in a releasable manner to the belt.

In order to permit of securing the two parts together or, on the contrary, of separating them from each other, the buckle is provided with a control member, constituted, for instance, by a kind of pivoting cover 11, suitably connected, on one hand, to the releasable piece 10, and, on the other hand, to thigh strap control cables 12^1 and 12^2, slidable in their sheaths 13^1, 13^2.

In the embodiment described, the buckle constitutes a circular case the bottom of which is shown at 8, with cylindrical walls 14 (Figs. 2 to 5) said kind of cup-shaped element being covered by a cover 11, with the interposition of a separating partition 15, if necessary. The cover is pivotally mounted, about the axis of the cup-shaped structure and is advantageously provided with lugs 16, in order to permit of handling it more easily.

Wall 14 is preferably overlapped by a flange 17 of cover 11 and it is provided with a hole through which extends piece 9, and another hole 18 (visible on Fig. 3) through which can be engaged the corresponding end (for instance wedge-shaped) of piece 10.

I will now describe the means for enabling cover 11 either to catch or, on the contrary, to release piece 10—19.

In the embodiment shown, said means consists of a hook 20, fixed to said cover. For instance, said hook 20 is carried by a piece 21, fixed on a support 22, itself driven by the pivot member 23 of the cover.

This hook 20 coacts with a lug 24, fitted with a roller 25, the whole being carried by piece 19, which is advantageously hollow, so that the hook can penetrate into the interval between the two plates which constitute said piece 19. Piece 10, rigid with 19, can be made in a similar way.

Finally pieces 21—22 are provided with an elongated slot 26 in which engages a pin 27, in such manner as to limit the angular displacement of the cover.

I will proceed to describe the means for enabling the cover to operate the cables which control the opening of the thigh straps. Preferably these cables lead to pieces 9 and 10, respectively.

According to an interesting feature of the invention, these means are made in such manner as to permit of releasing the thigh straps without having to operate the central buckle.

For this purpose, I provide two driving members 28, 29, combined with the control cables in such manner as to be able to drive said cables in only one direction.

One of these pieces, 28, located on the side where the buckle is permanently fixed to the belt, is for instance constituted by a projection of pivot member 23. Through this projection extends cable 12^1, provided with a small abutment mass 30. But this piece 28 might also be made similar to the piece 29 which will now be described.

This piece 29 is arranged in such manner that it can cooperate correctly with cable 12^2 or parts associated therewith, when piece 10 is engaged with the buckle.

Piece 29 is, for instance, constituted by a driving radial finger, slidably mounted in the buckle cover and urged outwardly by a spring 31 so as to project across the path of a lug 32 rigid with a sliding part 33 which serves to drive cable 12^2. Said cable extends through said sliding part and is provided, at its end, with an abutment mass 30. The sliding part is, for instance, movable along a circular path inside piece 10, the lug 32 of said sliding part projecting to the outside of said piece 10 owing to the provision of a slot 34 therein.

Furthermore, driving finger 39 is provided with a bevelled edge 35 adapted to permit, after the engagement of piece 10 on the buckle, lug 32 to occupy any position and finger 39 to come, during the closing of the buckle (which is produced by a rotation of the cover in the direction of arrow *f*, shown by Figs. 3 and 4) into contact with said lug and, owing to bevel edge 35, to pass on the other side thereof. In this way, the finger can thus drive the lug during the release operation, which corresponds to a rotation in the direction opposed to arrow *f*. It should be noted that, in this case also, the drive takes place in only one direction, which permits of manually releasing the thigh strap without acting on the central buckle.

This buckle further includes means for locking it in the closed position. Said means includes in the embodiment shown by the drawing, two push pieces 36, adapted to be operated from the outside against the action of springs 36^1 which, normally, tend to engage projections 37, carried by said push pieces into one or the other of two series of holes 39, corresponding to the closed and opened positions, respectively, and provided in the wall 14 of piece 8. In order to pass from one to the other of these positions, it suffices to push in the two push-pieces and to operate the cover in the direction of arrow *f* (for closing) or in the opposite direction (for releasing).

Concerning, finally, the mounting of the control cables for operating the thigh strap fastening means, I have found that it is advantageous to make use of the following arrangement:

The control cables advantageously pass first along the ends of the belt, then along strap 1, so as to lead preferably to a projection 5 to which the thigh strap fixation means are secured. For instance, this projection 5 is constituted by an extension of the shoulder strap 1.

The thigh strap fastening means are made as follows:

They include a male element 40, preferably fixed to the thigh strap and provided with a spindle 41 having a hole 42 formed therein. On the other hand, there is a female element 43, fixed to projection 5, said element including a pin 45 adapted to penetrate into hole 42 once the spindle has been correctly engaged into the female element. Hole 42 is widened at 46 on the side of the pin so as to facilitate the engagement thereof.

This pin, which is constituted for instance by a cylindrical rod suitably guided in piece 43, can be operated, on the one hand, by the corresponding control cable 12^1 or 12^2, and, on the other hand, preferably manually so as to permit the fastening of the device when the parachutist puts the harness on, and also to permit the release, when so desired, without acting on the central buckle.

For this purpose, an operating member 47 is provided on the outside, being fixed to the pin at 44 and suitably guided at 46.

It should be well understood that any other

means than those (spindle and pin) above described might be used within the scope of the invention.

The harness further includes any suitable tightening means for fitting it to the size of the parachutist. The double-D buckles shown at **49** on Fig. 1 are supposed to cooperate respectively with the two portions **6** and **7** of each shoulder strap, such an arrangement being given merely by way of example,

Whatever be the particular arrangement that is chosen, I obtain a system the operation of which results sufficiently clearly from the above description for making it unnecessary to enter into further explanations.

This operation can be summed up in the following manner:

When the parachutist puts the harness on, the central buckle being supposed to remain in the release position, the closing of the belt is effected first by means of this buckle, the cover of which is turned in the direction of arrow *f* after having introduced wedge **19** into the corresponding housing. At the end of this operation, bevel edge **35** having passed on the other side of lug **32**, the operation of the two control cables **12**[1] and **12**[2] is quite free. Therefore all the parachutist has to do is to secure the thigh straps by acting on operating members **47**.

If now the parachutist wishes to release the harness, for instance after he has landed, it suffices to operate said cover in the direction opposed to that of arrow *f* after having brought the locking means thereof out of action. The release of the various parts of the harness is then simultaneous and complete for all of them.

If, on the other hand, at any time, the parachutist, wearing the harness, wishes merely to unfasten the thigh straps, he can always do so by acting on members **47**, without touching the central buckle.

The system according to the invention is particularly simple to make, easy to operate and perfectly safe.

RENÉ TAUTY.

PUBLISHED
MAY 25, 1943.
BY A. P. C.

R. TAUTY
DEVICES FOR AIRCHUTS
Filed Feb. 10, 1940

Serial No.
318,343
3 Sheets-Sheet 1

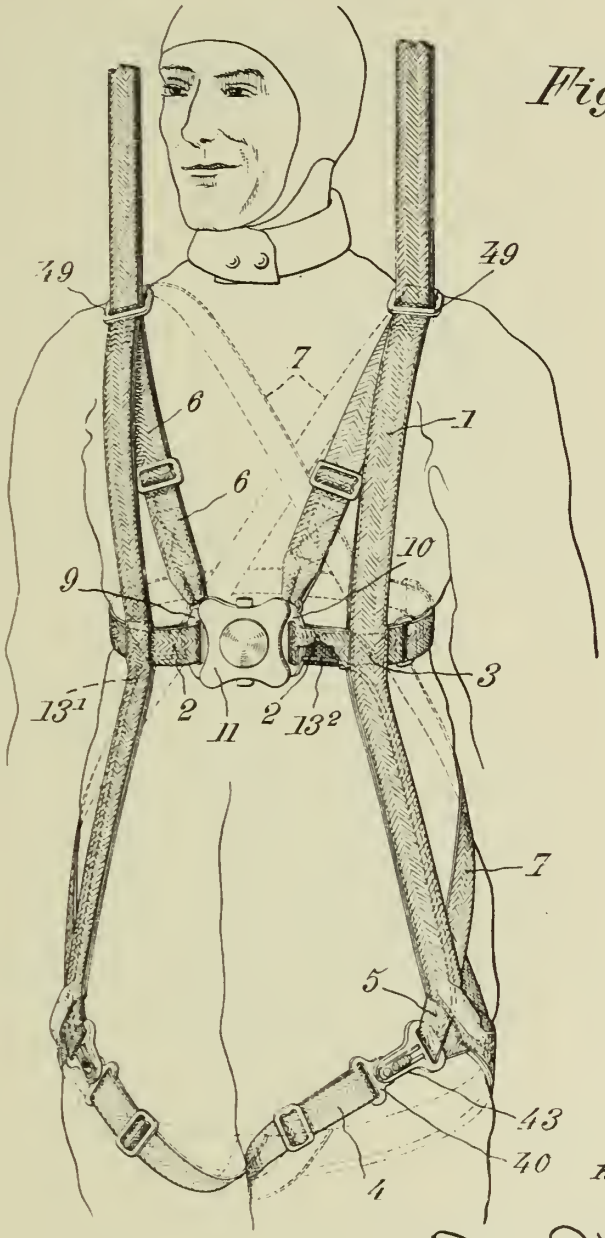

Inventor
René Tauty,
By Bailey & Larson
Attorneys

PUBLISHED
MAY 25, 1943.
BY A. P. C.

R. TAUTY
DEVICES FOR AIRCHUTS
Filed Feb. 10, 1940

Serial No.
318,343
3 Sheets-Sheet 2

Fig. 2

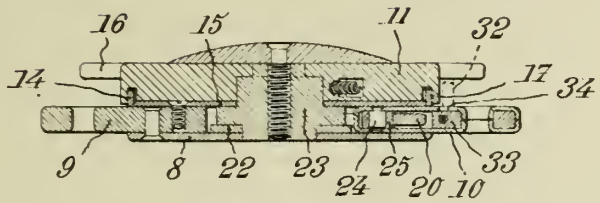

Fig. 3

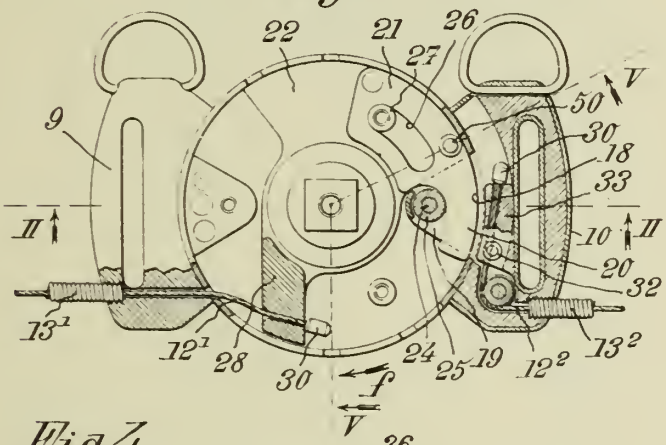

Fig. 4

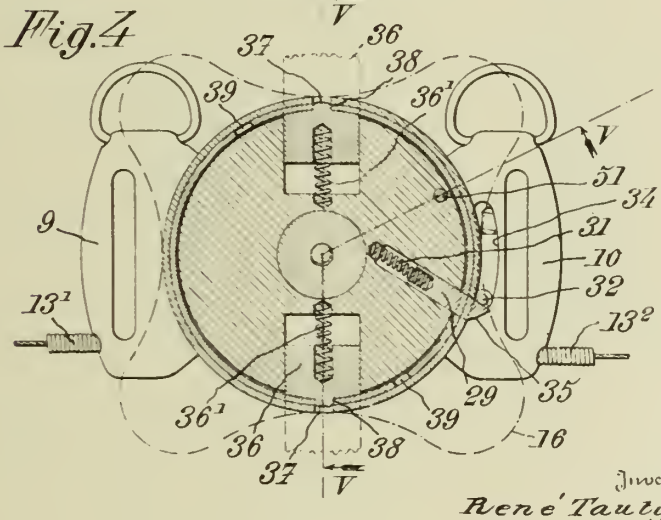

Inventor
René Tauty,

By Bailey & Larson
Attorneys

PUBLISHED
MAY 25, 1943.
BY A. P. C.

R. TAUTY
DEVICES FOR AIRCHUTS
Filed Feb. 10, 1940

Serial No.
318,343
3 Sheets-Sheet 3

Fig. 5

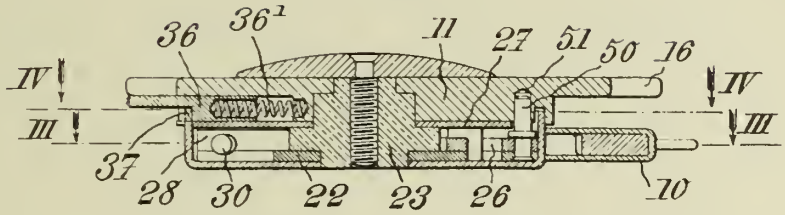

Fig. 6

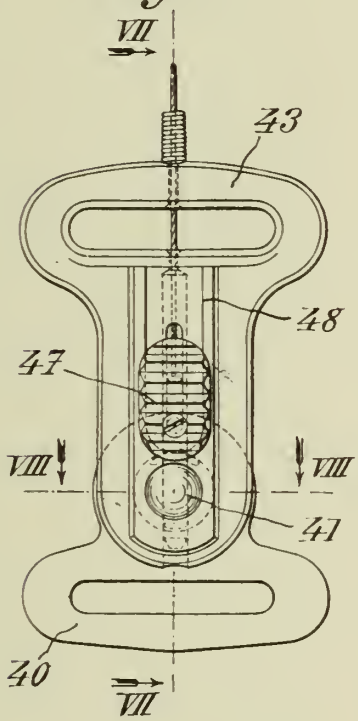

Fig. 7

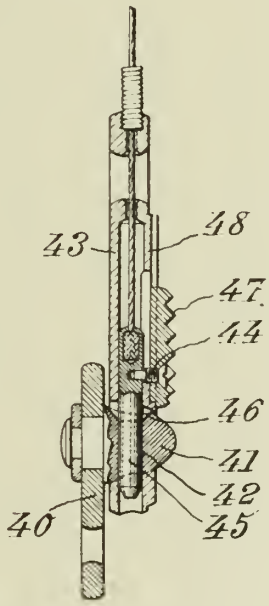

Fig. 8

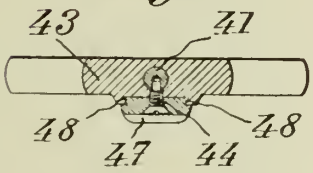

Inventor
René Tauty,

Bailey & Larson
Attorneys

Published May 25, 1943 Serial No. 318,932

ALIEN PROPERTY CUSTODIAN

MEANS FOR TESTING HARDNESS OF MATERIALS

Pierre Bollée and Marcel Bollée, Le Mans, France; vested in the Alien Property Custodian

Application filed February 14, 1940

This invention relates to means for testing hardness of materials.

It is very well known that the hardness of materials may be determined by measuring the impression effected on a convenient sample of the substance to be tested by an impression producing element, such as steel ball, diamond sphere, diamond cone, or square point of diamond or any other convenient substance, the measurement of impression being effected by measuring either the depth or the diameter of said impression when said impression producing element is constituted by a sphere. With some known machines the hardness is determined by the load which must be exerted on the impression producing element for obtaining on the material to be tested a determined depth of impression.

The load exerted on the impression producing element is constituted either by a system of weights and a set of levers pivoted on shafts or on knives or by a liquid pressure (produced by a pump) or by a spring constituting a dynamometer or also by the combination of several of the cited means.

The mechanism which produces and transmits the pressure to the impression producing element (ball or other) requires a complicated delicate and expensive arrangement, which contributes for a large part to the cost of keeping in good state of repair and to the want of precision of the machine.

The means according to this invention which remedies above drawbacks comprises in combination a table designed for receiving the pieces or samples of material to be tested, provided with a hand operating device for displacing same and for resiliently applying the piece or sample to be tested against the impression producing element located on a convenient support, comparators in any number located on convenient supports being provided with contacting members or fingers respectively in contact with the supporting table of the substance to be tested and with the support of the impression producing element, with a view to realize a unit of a simple strong construction allowing a great precision of the test to be obtained.

In the accompanying drawings which show by way of example a preferred embodiment of a machine according to this invention,

Fig. 1 is a side view of the machine,

Fig. 2 shows a plan view of Fig. 1,

Fig. 3 shows an end view of Fig. 1,

Fig. 4 is a perspective view of the machine,

Fig. 5 is a diagram showing the principle of operation of the machine,

Fig. 6 shows a modification of machine, according to the principle of this invention and equipped for testing of wear.

The member which presses the impression producing element (ball or other) is an arm 1 having a convenient cross section, a convenient length and made of convenient substance, said member being rigidly located on the frame 2 of the machine. The impression producing element 3 shown on the drawing is a ball of $\frac{1}{16}$ of inch and is secured at the end of arm 1 by means of the socket 4 and tightening screw 5.

The sample of material to be tested is located on the table 6 which is provided with a tail 7 for instance cylindrical in shape which passes axially into the screw 8 constituting a jack. At rest, the table 6 rests upon the upper end of screw 8 while tail 7 which constitutes a pushing device is in contact with a cam 9 provided with an actuating hand lever 10 combined with a braking device constituted by a friction sector 11 secured on the frame 2 of the machine. The cam 9 is located on the lower end of screw 8. A nut 12 provided with handling arms 13 is designed for raising or lowering the screw 8 which is allowed only to slide endwise, a screw 14 or key preventing same against rotation.

Thanks to such an arrangement the vertical displacement of table 6 can be controlled either by the hand nut 12 for the quick displacements, or by means of the excentered lever 10 for slow displacements.

The vertical columns 15 and 16 (not shown in Fig. 3), rigidly secured on frame 2, are provided for securing the dial comparators 17 and 18 by means of two arms 19 and 20. The contact fingers of the comparators are located in the transverse plane of the machine which passes through the impact point of the impression producing element upon the material to be tested. The fixed point of said comparators being the frame 2 of the machine, said fingers are in contact, on the one hand, for the comparator 17, with arm 1 through the angle bar 21 with a micrometric regulating screw 22, and on the other hand, for the comparator 18, with the table 6 supporting the material to be tested, by means of the micrometric regulating screw 23.

The result of such an arrangement is that every yielding of the arm 1 is measured by means of the comparator 17, while the comparator 18 measures the raising of the table.

The operation is as follows:

The sample of material to be tested is first placed upon the table 6. By operating the hand screw 12, the operator actuates the screw jack 8 until the pointer of the comparator 17 begins to move, the comparator 18 being already in contact with the plate 6 thanks to the regulation effected by means of the screw 23.

When the said pointer of comparator 17 starts moving, the operator brings both dials of comparators to zero. He acts then upon the cam lever 10 for actuating the pushing member 7 thus exerting a thrust of the sample to be tested against the ball 3, which transmits such thrust to the end of arm 1 and deflects said arm until said deflection, measured by the comparator 17, owing to the characteristic features of the arm (length, cross section, shape and elasticity) indicates that the required pressure for testing the hardness is obtained on the ball 3.

The pointer of comparator 17 having attained a mark of the dial relating to the load deflection, the operator, by actuating the lever 10, depresses said lever and lowers the table 6. Said table is stopped when the pointer of comparator 17 attains its starting zero point, that is to say, when the pressure or thrust on the ball has become equal to zero. The pointer of comparator 18 is behind of a quantity which is equal to the depth of the impression on the sample to be tested.

Fig. 5 diagrammatically shows in positions I, II and III, the respective positions of the table 6, of substance to be tested, of the arm 1, of the ball 3 and of both comparators 17 and 18.

Such diagram, moreover, shows that if the comparator 18 were secured on arm 1 instead of being secured on frame 2, it would be possible to test the hardness starting from a required depth of impression, the hardness being indicated by the thrust which is necessary for obtaining the necessary depth of impression.

The operation is effected in two stages, as follows:

Both comparators 17 and 18 starting from zero, the depth of impression is indicated by the difference between both comparators. When the extreme difference is obtained, the indication of hardness is then read on the comparator 17.

The arm 1 may be rendered removable by locating its stationary end on a supporting device, similar for instance to the support of a broaching tool on a lathe, by means of a wedge or through any other means giving the necessary rigidity. Such removable fixture of the arm allows same to be adapted as to its cross section to the test to be executed and to the nature of the material to be tested.

The important particular for the arm is that the deflection which it has to bear, does not cause an excessive stress of same in order to be sure that after each of the resilient deformations of said arm, same comes back to its starting zero point. A vibrating device located on its free end and constituted for instance by a small motor slightly unbalanced may render its return to the zero position easier by actuating same after each test.

It is to be noticed that the impression producing element could be located on the arm 1 through a socket containing a plunger which supports a ball acting upon a calibrated spring, a device which allows a previous "setting" pressure to be exerted before any resilient deformation of the arm. Said previous pressure, for instance of 10 kgs. per square centimeter, may be more simply exerted by the deformation of the arm itself.

The arm 1 may be beforehand conveniently tightened by an adjustable member located on the machine frame and constituting an abutment for preventing the arm to resume an absolutely free position of balance. Said arrangement thus leaves a reduced degree of elastic tension of the arm and thus secures the regular bringing to the zero position of the comparator 17.

The machine while keeping the same principle of elastic deflection of an arm 1 bearing the impression producing element, could also have a shape different from that which is shown in Figs. 1, 2 and 3.

The parts producing the raising of the table 6, which carries the material to be tested, could be different from those hereabove described.

Fig. 6 shows that the machine could advantageously have the shape of a milling machine, the arm 1 being for instance located on a group of carriages 24, 25 and 26, provided with an instantaneous locking device for allowing the displacement of same in the three directions of the space. In such a constructional form the columns 15 and 16 which carry the comparators 17 and 18, are secured on the box 27 which contains the arm 1 locked by means of a wedge. The columns 15, 16 and box 27 are a part of the carriage 24 having a vertical displacement.

The machine shown in Fig. 6 is equipped for a friction testing. The comparator 18 has consequently been removed. The rotating table 28 located on the box 29 is actuated by an adjustable gear 33 controlled by means of motor 30. The box 29 replaces the stationary table 6 of Fig. 1, on the end of screw jack 8. The internal thrust producing device and the cam actuated by the hand lever 10 are kept. A pick-up 31 located on the arm 32 is pivoted on the box 27. The vibrating member of pick-up 31 rests on a machined part of arm 1 on the movable end of same.

For the testing executed by the machine shown in said Fig. 6, the impression producing element is replaced by a friction device 35 of tungsten-carbide or any other convenient substance, having a convenient shape and located either rigidly or through a ball joint at the free end of the arm 1. A small oiling canal may be arranged in the vicinity of the friction device in order to allow the friction testings to be made with a lubricant substance.

A revolution counter connected with the shaft 33 of the gear is secured on a part 34 of the frame. The comparator 17 and the counter secured on the frame 34 give indications concerning the results of the testing which takes as a fixed basis either the travel of the sample secured on table 28 or the reduction of the deflection of the arm 1 produced by the wear of the sample.

For the testings which require a long duration, a compensating means acting upon the micrometric raise of the device which supports the sample keeps constantly the deflection at its maximum value in the same way as in the gear truing machines, the automatic advance of the mill bearing compensates for the wear of mills. For such a purpose, a feeling device is located near the pick-up on a rigid arm provided on the poppet 36. The comparator 18 may be used for

appreciating the degree of wear of the sample at the stopping time of the machine.

The pick-up has for its duty to electrically detect and amplify for instance: the alteration of the rubbing surfaces, the first stripping of substance as a result of a seizing, or the undue presence of foreign substances between the sample and the friction device **35**. A regular noise having periodic changes of intensity characterises a normal friction.

The seizing caused by a stripping of substance is perceived as a parasitary spark. Such detection may be an optical one and in this latter case a neon lamp may be fed by the amplified circuit.

The pick-up makes it possible to record the wear testing on a gramophone disc or cylinder or even on a magnetic wire and to compare the result thus obtained with a standard record. For that purpose a disc rotating device actuated by the gear **33** is provided on the frame of the machine together with a registrating device. The comparison may be made either acoustically or optically. In the latter case, a photometric arrangement may be provided for determining the differences existing between the record of the sample and the standard record.

It is also possible to have, the standard record put into rotation by a corresponding device, an optical mark, for instance a neon lamp, constituting a comparison term for the luminous mark concerning the tested sample.

Galvanometers could be provided in the place of earpieces or of the lamps or together with said devices. An electrical system comprising convenient relays could actuate a signal device or stop the machine as soon as the wear of the sample corresponds to predetermined satisfactory or nonsatisfactory conditions.

A device comprising a table having a to-and-fro movement for the testing of alternative wear could be substituted for the box **29**.

The friction device **35** could also be replaced by a rotating smooth disc or a quickly rotating disc of tungsten carbide or other convenient substance, the sample being still secured on table **28**. In such instance, it is not necessary to have the sample displaced, so that the rotating table **23** may be kept unmovable unless it is preferred to simply use the table **6** of Fig. 1 which, in that figure, is used for testing hardness. The disc rotating around a horizontal axis depresses in the stationary sample a wear impression in the form of a half-moon. The sample could also be secured on the arm **1** in a similar manner as the friction device of Fig. 6. The wearing disc is then located on the screw **8**, its horizontal shaft being located on a convenient box which is then secured in the place of box **29**, the movement being transmitted by the gear **33**. The box can also be directly mounted on the table **6** which is used for testing hardness.

The vibrating device which is optionally located upon the arm **1** may be actuated for some wear testings. The vibrations of said device produce a sounding background which does not modify the detection of the particulars of the wear.

The compensating movements between the arm **1** and the sample carrying table could be totalized in function of the number of revolutions of the counter and be recorded by pulsations on the disc.

The machine could also be used for appreciating the degree of achievement of cylindrical or plane surfaces. It is thus only necessary to place the carriage **24** at the top end of its course and to substitute the pick-up for same, so that the latter directly rubs upon the surface to be controlled. The control could be realized by the recording method previously described.

The arm **1** is devised for working by deflection. It is obvious that nothing would be changed to the invention when using an arm, a bar or like member, either simple or composite, working by torsion, traction or compression, thermical processes being eventually used for obtaining the lengthening of the bar.

The machine being devised for testing hardness could also be used for obtaining testings of any kind on convenient samples which could substitute for arm **1** and which would be submitted to a vibratory standing in order to follow the variations of load and of deflection of a metal under the effect of vibration communicated to the latter.

In the several constructional forms the elastic arm **1** may have any desired constitution: it could, for instance, be constituted by a series of spring leaves, of any convenient arrangement and having any desired shape. It could also be constituted by a rigid arm pivoted upon a shaft located in the box **27** with interposition of a torsioning spring, any other arrangement being used for that purpose.

The described arrangement could also be inverted, the arm **1** being rendered rigid and the table **6** (or **28**) being provided with an elastic means such as for instance coil springs or the like, the operation of the comparator being conveniently modified for that purpose.

The machine according to this invention, and more particularly the machine described and shown in Figs. 1 to 4, could be provided with only one single comparator located on the impression producing element.

The invention applies for determining the hardness of metals or any other substances as well as the resistance of said substances to wear.

PIERRE BOLLÉE.
MARCEL BOLLÉE.

PUBLISHED

MAY 25, 1943.

BY A. P. C.

P. BOLLÉE ET AL

MEANS FOR TESTING HARDNESS OF MATERIALS

Filed Feb. 14, 1940

Serial No.

318,932

4 Sheets-Sheet 1

Fig. 1

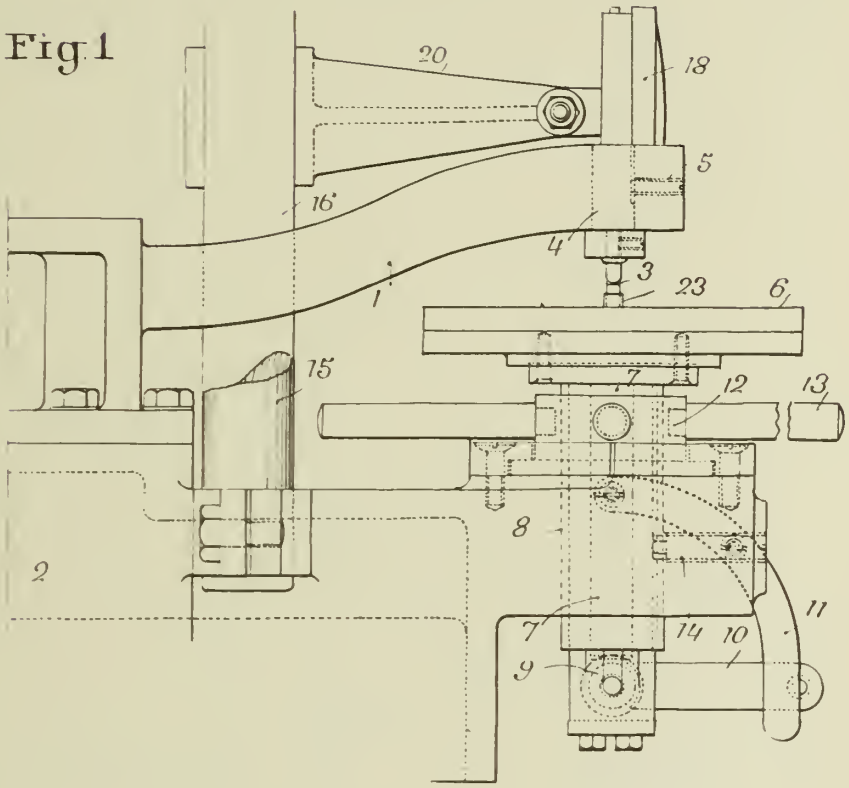

Inventors,
P. Bollee &
M. Bollee
By: Glascock Downing & Seebold
Attys.

PUBLISHED MAY 25, 1943. BY A. P. C.

P. BOLLÉE ET AL

MEANS FOR TESTING HARDNESS OF MATERIALS

Filed Feb. 14, 1940

Serial No. 318,932

4 Sheets-Sheet 2

Fig. 2

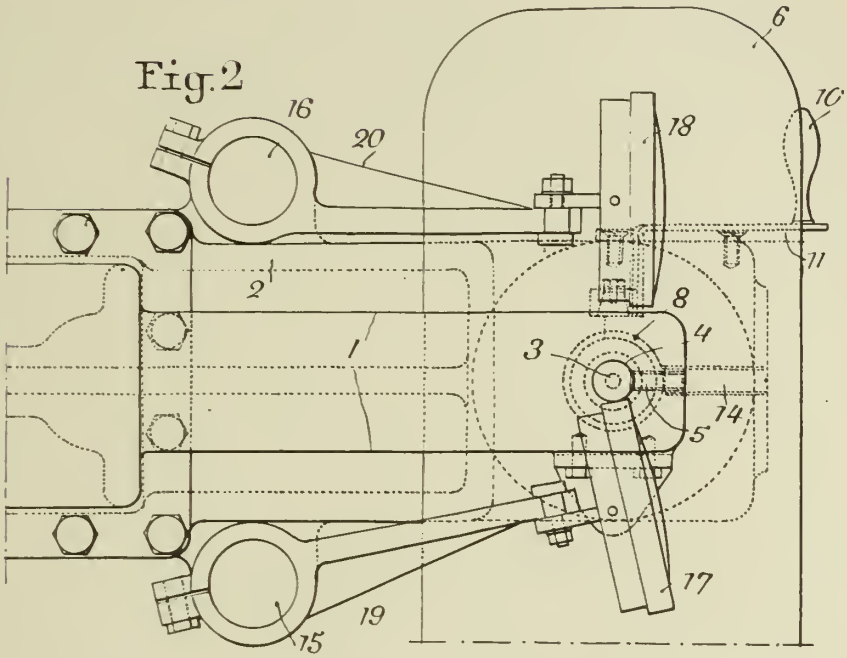

Fig. 4

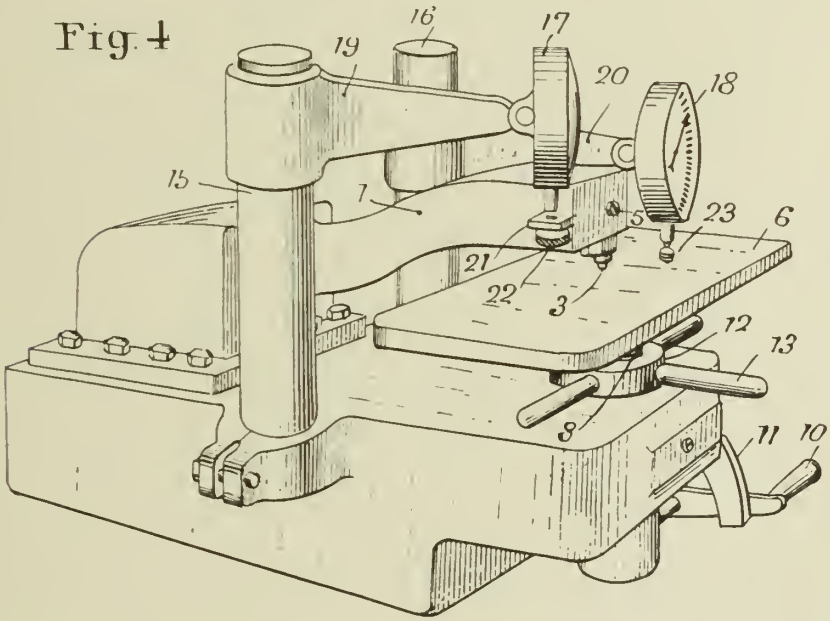

Inventors,
P. Bollée &
M. Bollée
By: Glascock Downing & Seebold
Attys.

PUBLISHED

MAY 25, 1943.

BY A. P. C.

P. BOLLÉE ET AL

MEANS FOR TESTING HARDNESS OF MATERIALS

Filed Feb. 14, 1940

Serial No. 318,932

4 Sheets-Sheet 3

Fig. 3.

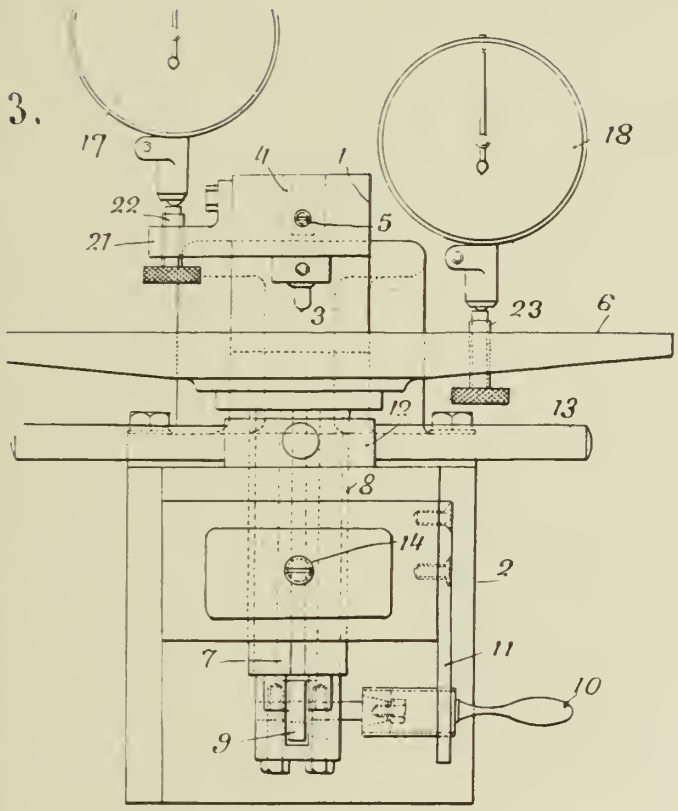

Inventors,
P. Bollee &
M. Bollee

By: Glascock Downing & Seebold
Attys.

PUBLISHED

MAY 25, 1943.

BY A. P. C.

P. BOLLÉE ET AL

MEANS FOR TESTING HARDNESS OF MATERIALS

Filed Feb. 14, 1940

Serial No. 318,932

4 Sheets-Sheet 4

Fig 6

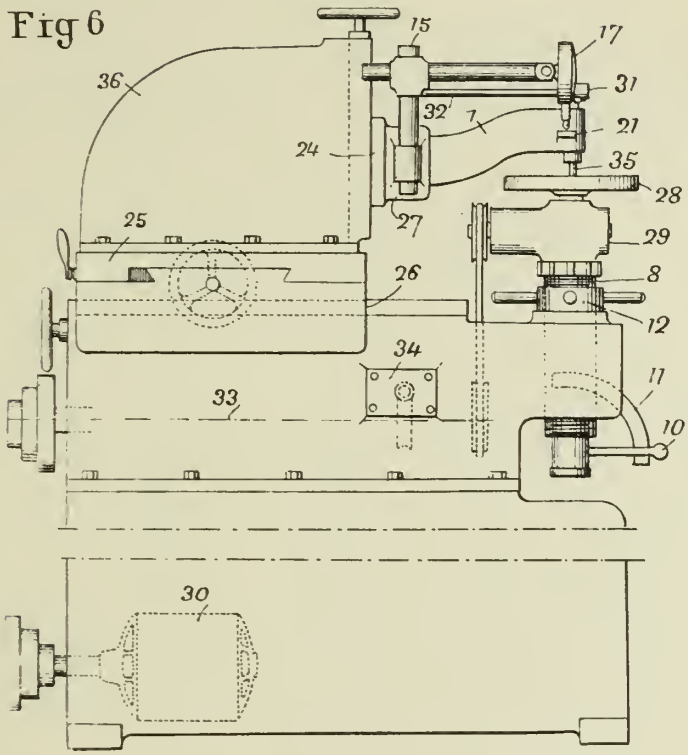

Fig. 5

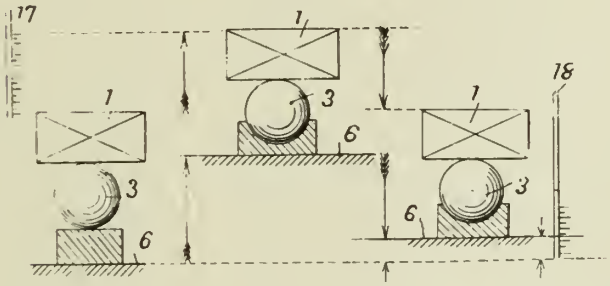

Inventors,
P. Bollee &
M. Bollee
By: Glascock Downing & Seebold
Atty's.

Published May 25, 1943

Serial No. 319,192

ALIEN PROPERTY CUSTODIAN

JOINING PAPER REELS

Paul Dietrich, Augsburg, Germany; vested in the Alien Property Custodian

Application filed February 16, 1940

The invention relates to a device for sticking the rear portion of a running-down web to a new reel, in which the new reel is carried in a rotatable frame and caused to revolve with the speed of the running-down web, and by a turn of the carrier frame is brought into position for sticking, adhesion being affected by the pressure of a brush. Devices of this kind are preferably used in rotary printing machines. In known devices of this description the brush is actuated by means of rods. Since the sticking is to be done very quickly, vigorous shocks consequently occur in known devices of this sort which jeopardize smooth working; they lack a sensitive and still sufficiently safe means of actuation.

According to the invention such a means is provided in the following manner. The brush carrying lever is actuated by one or more pistons which stand under the influence of some non-mechanical pressure, such as pneumatic or hydraulic pressure controlled, agreeably to the purpose, by an electromagnetically operated piston valve or system of valves. In effecting this by pneumatic or hydraulic pressure it offers no difficulties to regulate the duration of the operation by more or less sharp throttling. In order to prevent the brush being pressed too vigorously against the web, in a further developed form of the invention, the brush carrying lever is rendered yielding, for instance by means of an intermediately placed torsional spring, this spring acting in a manner as an organ of safety. Moreover the elasticity of the spring and with it the pressure of the brush may be regulated.

Since it is possible in this invention to release the impulses by means of the electric current, in itself a simple and therefore advantageous way, and no shocks occur which are usual with the operations of these organs, it is also feasible to use as simply the known cam gear for controlling the electric current to release the impulse for the brush to operate. The use of the cam gear is necessary because the adhesive is spread over the larger part of the circumference of the reel. Were the brush accidentally to press the running-down web against the new reel at the instant when the running-down web could touch only the rear edge of the area covered with the adhesive, the not used adhesive would be sure to cause an obstruction further along which in turn would cause the web to break. This may be avoided by the cam which of course has to have a definite position relative to the adhesive area. The cam gear also controls the motions of the knife for cutting off the tail end of the old web after the new reel has been stuck to the main portion.

In known cam gears which serve such purposes the contacting member is actuated by a rotating cam member and rods. There being considerable masses to be quickly accelerated and retarded, these arrangements were not successful. According to the invention this defect is avoided in the following manner. The cam gear consists of a member which is controlled directly by the rotating member and provided with an elastic bearing and also having a multiplicity of contacting areas which operate with counter contacts, also in elastic bearings. In this manner a contact is provided which will bear hard usage.

Also means have to be provided which after the brush has been put in operation, will prevent the afore-mentioned cam gear from actuating brush and knife a second time when the contacts touch anew but which will allow both these organs enough time to operate effectually. To this end, according to the invention, the electric circuit for operating the brush and knife which is closed arbitrarily and the cam gear dependant on the position where the sticking will take place is influenced by time relays.

It is moreover necessary that the running-down reel be subjected to a brake controlled by the tension of the web as soon as in the carrier frame it is moved out of reach of the usual reel brake. To this end, according to the invention, the reel cones are fitted with band brakes, the effect of which may be arrested by a spring acting upon the brake lever. In the no-load position the reel axle with its reel swung inside the turning frame will be situated under a lever which is shaped, agreeably to the purpose, like the segment of a circle and which is moved by an oscillating roller influenced by the tension of the web. This lever consequently operates by the roller upon the brake lever proper whereby the band brake upon the axle of the reel will be tightened more or less.

When the web normally rolls off the reel, the reel is, agreeably to the purpose, influenced by a band pendulum and an oscillating roller dependent on the tension of the web, which roller by means of a control motor and a step-less gear ensures uniform speed of printing machine, rollers and paper reel. Normally the speed of the reel will exceed that of the printing machine rollers and the coupling of the roller speed will act brakelike. Before the new paper reel may be stuck to the running-down web, the new paper reel which at the start is not in motion must be

made to acquire the speed of the running-down web. To this end, according to the invention, a free wheel of known construction is provided between roller and reel which in the event of the reel drive failing which is normally faster than the roller speed, the band pendulum may no longer be coupled to the roller drive. Hence the speed of the band pendulum may adapt itself to that of the reel which at first is nil. Now in order to make the new reel attain the speed of the running-down web, the band pendulum will be driven from the roller only by a slip coupling.

The drawing shows a preferable form of the object of the invention.

Fig. 1 is a diagrammatic total view;

Figs. 2 and 3 show the cam gear for the control of the electric circuit;

Figs. 4 and 6 the means for regulating the speed of the band pendulum, and

Fig. 5 the slide coupling and the free wheel pertaining thereto.

The three-reel-star 2 rests rotatably in bearings of the floor stand 1. It carries the running-down reel 3 with the running-down web 4 and the new reel 5 which is to be stuck to the running-down web 4. After applying the adhesive, sticking is effected by the brush 6 at the end of a lever 7. This lever 7 will be moved by torsional springs 8 on a shaft 9, which by means of pistons 11 or 11′ acting on levers 10 or 10′ may be twisted either way. The pistons 11 or 11′ are actuated by compressed air which after release by a piston valve or a valve system 13 enters into the one or the other line of piping. Control is effected by either the magnet 14 or 14′. The air is supplied through a pressure reducing valve 16 and the piping 15. Pressure in the pressure reducing valve may be adjusted at will. The speed with which the lever 7 and together therewith the brush 6 is swung into operating position, may be regulated at will by means of throttling valves in the air pipes. On the lever 7 a magnet 17 also is placed which actuates the knife 18 for severing the running-down web.

Together with the paper reels a cam 30 rotates which operates directly together with a counter cam 31 (see Fig. 2 and 3). The cam 31 is supported in three places by springs 32 and is provided with silver contacts 33 in two places which operate together with corresponding counter contacts which are also elastically supported by springs 35.

The electric circuit according to Figs. 1 to 6 may for instance operate as follows:

While the old reel runs down, that is before the reel star is put in position where sticking may take place, the connection prepared between contact S2 and the electromagnetic control valve S4 is interrupted by a push button, not shown. There is now no connection between the contact S2 and the lifting magnet S5 which operates the severing knife 18.

As soon as the push button is pressed and the cam 30 on the paper reel cone closes the contact S2, the electromagnetic control valve S4 is energized and opens the compressed air pipe and the way to the piston 11′. This causes the lever 7 with the brush 8 to swing towards the web of the running-down reel which will thereby be stuck onto the new reel. Simultaneously the end switch S1 breaks the connection between the contact S2 and the electromagnetic control valve S4 and prepares a connection between the contact S2 and the electro-magnetic control valve S3, and also between the contact S2 and the electric lifting magnet S5, which latter connection however is still interrupted by the contact S2.

On the next revolution of the cam 30 on the reel cone the contact S2 will again be closed. Now the electro-magnetic control valve S3 as well as the electric lifting magnet S5 will be energized. Between S2 and S3, and also between S2 and S5 a time relay is interposed. The effect of which is that first the lifting magnet S5 will actuate the knife which severs the running-down web and only then the electro-magnetic control valve S3 will open the compressed air piping leading to the piston 11, which moves the lever 7 back again to rest.

The return swing of the lever 7 operates the end switch S1, and the connection between S2 and S3 as well as that between S2 and S5 is thereby broken. Simultaneously the previous connection between S2 and S4 is prepared so that conditions for another sticking operation are again restored.

The Fig. 1 shows moreover that the reel shafts are provided with brake bands 40 which at 41 are fastened and at 42 attached to a two-armed lever 43. A spring 44 holds the two-armed lever 43 with sufficient force against a stop 45 to balance the brake effect. A roller 46 at the one end of the two-armed lever 43 is within reach of the circularly curved lever 47 when the reel is in the normal running-down position, without any special brake effect taking place; since the paper reel in this position stands under the influence of the band pendulum 60. In the no-load position however as in the case of reel 3 a brake effect may be caused by the lever 47, since the oscillating roller 48 is influenced by the tension of the web. If the tension relaxes the oscillating roller will sink a little, whereby through an intermediate two-armed lever 50 in bearings 49 a rod 51 is moved downward. This motion is transmitted to the rod 54 by means of the two-armed lever 53 in bearings 52, whereby the two-armed lever 56 in bearings 55 is caused to swing contrary-clockwise. By the motion of the lever 53 as well as that of the lever 56 the curved lever 47 will be moved towards the middle shaft of the floor-stand 1. The roller 46 will thereby be swung about the fast center of motion 57 and the brake band will be tightened. The reversed motion takes place when the tension of the web increases and the oscillating roller 48 is thereby raised. A counter-weight 58 serves to balance the lever.

The band pendulum is influenced by the paper reel as well as the roller of the printing mechanism. An oscillating roller 48 (see Fig. 6) is influenced by the tension of the web 4 and adjusts by means of a toothed wheel 63 and a rack 64 and also a lever 65 a mercury tilting switch 67, the lever 65 oscillating about the center of motion supposed at the time to be at rest. It drives an electromotor 62 (see Fig. 4) which adjusts the rack 68 (see Fig. 6) whereby a gear without steps is adjusted which regulates uniformity of motion of the band pendulum 60 and the roller until the tension of the web is again compensated. To prevent excessive regulation the rack 68 like the stop 66 will be adjusted in the sense that the lever 65 will swing about the point 70 as the now supposed to be fast center of motion, so that the mercury tilting switch 67 will break the circuit driving the motor before the oscillating roller 48 may get into the normal position. In this manner intermittent adjustment is attained which prevents oscillations.

Between the printing machine roller and the paper reel a free wheel 71 (see Figs. 4 and 5) is interposed which is constructed as follows: The rollers 72 will be pressed into the wedge-shaped spaces between the outer wheel 73 and the inner wheel 74 as long as the drive of the paper reel, which normally overruns a little the speed of the printing machine rollers, is effective. As soon however as the running-down reel 3 is rocked out of reach of the band pendulum 60 (see Fig. 1), this drive fails as the paper reel 5 which is now situated under the band pendulum 60 is still at rest. The rollers 72 will be held back by the outer wheel 73 so that the wheel 74 which is coupled to the printing machine roller may freely rotate. The wheels 74 and 73 are connected only by a slip coupling 75. This causes the presently resting paper reel 5 to attain slowly the speed of the running-down reel 3, whereupon the sticking operation may in the manner described be started anew.

PAUL DIETRICH.

PUBLISHED
MAY 25, 1943.
BY A. P. C.

P. DIETRICH
JOINING PAPER REELS
Filed Feb. 16, 1940

Serial No.
319,192
2 Sheets-Sheet 1

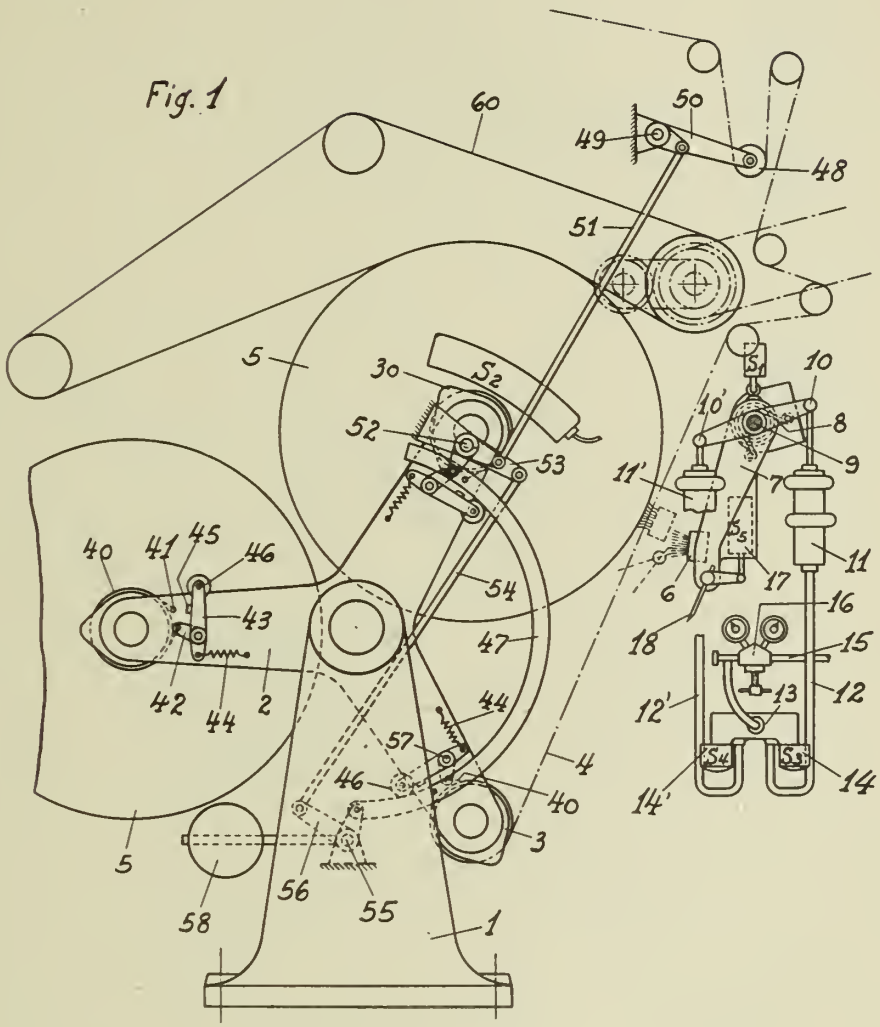

Inventor
Paul Dietrich
Maréchal & Noi
Attorneys

PUBLISHED
MAY 25, 1943.
BY A. P. C.

P. DIETRICH
JOINING PAPER REELS
Filed Feb. 16, 1940

Serial No.
319,192
2 Sheets-Sheet 2

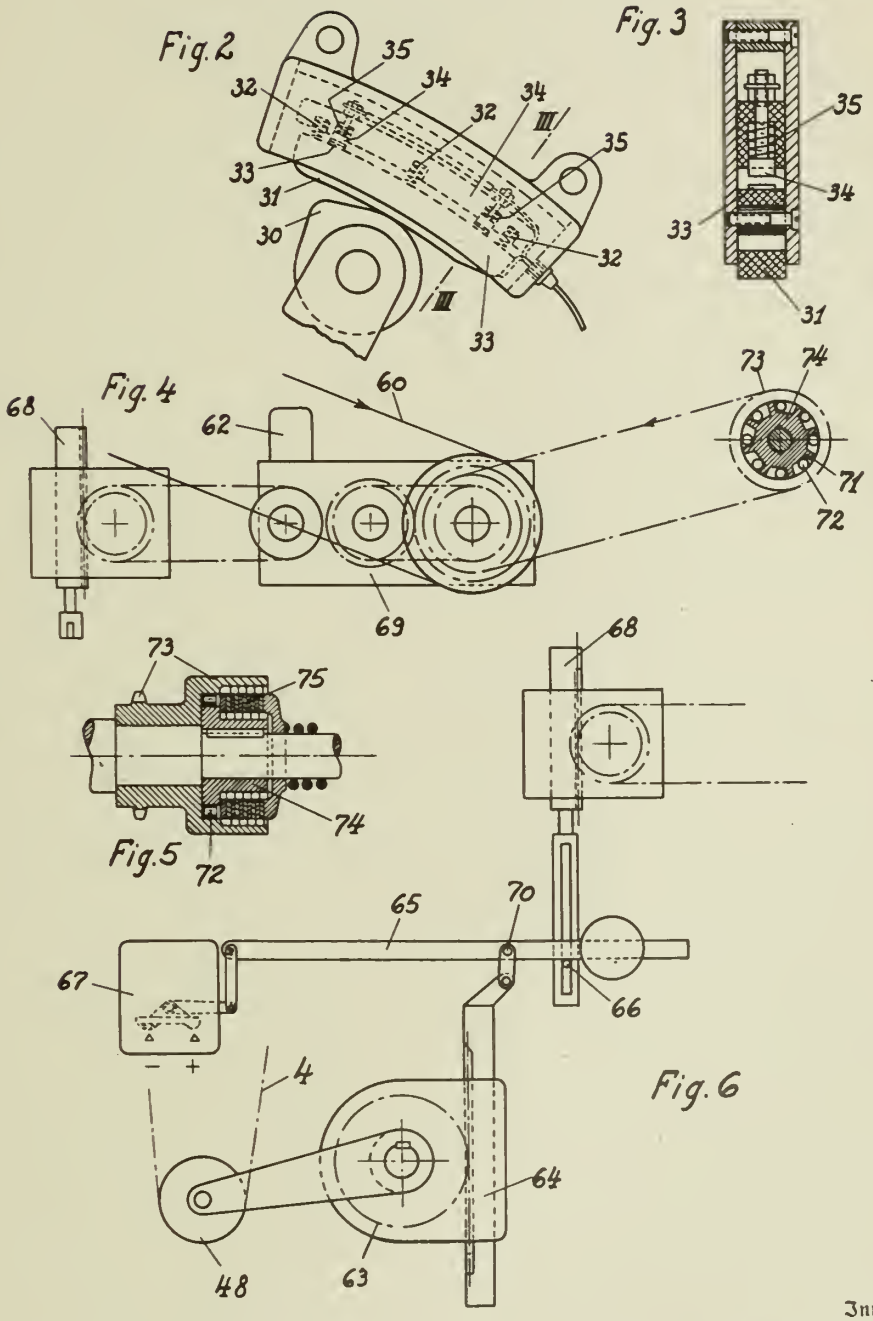

Inventor
Paul Dietrich
Marechal & Noe
Attorneys

Published May 25, 1943

Serial No. 319,423

ALIEN PROPERTY CUSTODIAN

SLIDE VALVES FOR LIQUIDS AND VAPORS WITH BILATERALLY ACTING GATES

Bernhard Vervoort, Dusseldorf, Germany; vested in the Alien Property Custodian

Application filed February 17, 1940

In case of slide valves for liquids and vapors with bilaterally acting gates, handling and especially pressing the gates against the valve passages offers considerable difficulties. If—as it has already been proposed—the lock faces and the gates to be applied on these faces are wedge-shaped, the shutting of the valve requires considerable energy, and a high wear will result thereof, which soon renders the apparatus unfit. Sometimes, there are used pressure rolls or balls for pressing the wedge-shaped end of the valve spindle against the gates, which rolls or balls render the head piece of the valve very complicated and the valve itself very expensive.

Object of the present invention is a slide valve for liquids of all sorts as well as for vapors having bilaterally acting gates, offering the advantage of highest simplicity and, therefore, of absolute working reliability, as it does not require any additional pressing members for the gates and, therefore, can act very simply and safely.

For this purpose, the valve being of known nature and having a straight passage, is provided with two laterally acting gates, the straight and smooth lock faces of which can be put tightly against the passage openings of the valve to be shut off, which, however, have a conical bore between each other, into which fits the end of the valve spindle being formed conical according to this bore. In addition to this, the valve spindle itself has, somewhat above its conical end, an annular flange which gears under clearance space into corresponding annular recesses of the two gates.

The lower conical opening of the two gates is closed by means of an elastic plate, which is fixed to one of the two gates, the gates having still so much clearance in their lowermost position that the elastic plate can give way when the spindle is turned further. In addition to this, the elasticity of the plate is of such a nature that the plate, when moving the gates downward to their locking position, does not detach itself from the gates, thus ensuring them to be guided in an absolutely straight direction until the said position. Only if the gates have reached their lowermost position, in which they are to place themselves laterally against the locking faces of the valve, the elastic plate gives way downward when the valve spindle is turned further, so that now the wedge-shaped end of the spindle can start operating by spreading the two gates apart and forcing them firmly against their seats.

At the lower end of the gates, the valve casing is open and can be closed by a removable cover.

The drawing shows a cross-section of a slide valve for liquids and vapors according to the present invention:

The valve 1 of known nature has a straight passage 2, which is shut off by a bilaterally acting lock. The locking is effected by two gates 3 and 4, the exterior faces 5 and 6 of which are flat and rectilinear and pass into the upward directed canal 7 of the valve. The interior faces of the two gates have a conical bore, into which gears the end 8 of the valve spindle 9 being of corresponding conical shape. Somewhat above its conical end the valve spindle has an annular flange 10, which gears under clearance into corresponding recesses 11 and 12 of the gates.

At their lower ends, the gates are covered by an elastic plate 13, which is fixed to one of the two gates by means of screws 14.

At the lower ends of its gates, the valve according to the present invention has a cleaning inlet being closed by means of a cover plate 15, which can be unscrewed.

If the passage 2 of the valve is to be shut by means of the two gates 3 and 4, the spindle 9 is turned downwards by the hand wheel. When passing down, the two plates 3 and 4 slide along the inner walls of the valve top 7, without the wedge-shaped end 8 of ——— the valve spindle spreading in any manner the gates apart, such spreading being prevented by the elastic bottom plate 13, which is constructed in such a manner that it remains in its closing position as long as the frictional force only is to be surmounted. However, as soon as the gates 3 and 4 have reached their lowermost position and are to be pressed against their tightening faces, i. e. when the fixing screws 14 touch the bottom of the valve, the elastic bottom plate 13 gives way when the spindle is turned further downwards, so that the end 8 of the valve spindle can get further into the space between the gates 3 and 4 and will spread them apart (press them outward).

In order to open the valve, the spindle 9 is turned upwards, the spreading pressure upon the gates 3 and 4 releasing, and the cover plate 13 being shut again. After the collar 10 has touched the recess in the gates 3 and 4, these ones are carried upwards, easily sliding along the walls.

The removable bottom plate 15 of the valve covers a cleaning inlet which permits to eliminate eventual impurities from the bottom of the gates.

As for the rest, the valve provided with a lock according to the present invention may be of any shape: e. h. it may be a flat as well as a round valve.

BERNHARD VERVOORT.

PUBLISHED

MAY 25, 1943

BY A. P. C.

B. VERVOORT

SLIDE VALVES FOR LIQUIDS AND VAPORS WITH BILATERALLY ACTING GATES

Filed Feb. 17, 1940

Serial No. 319,423

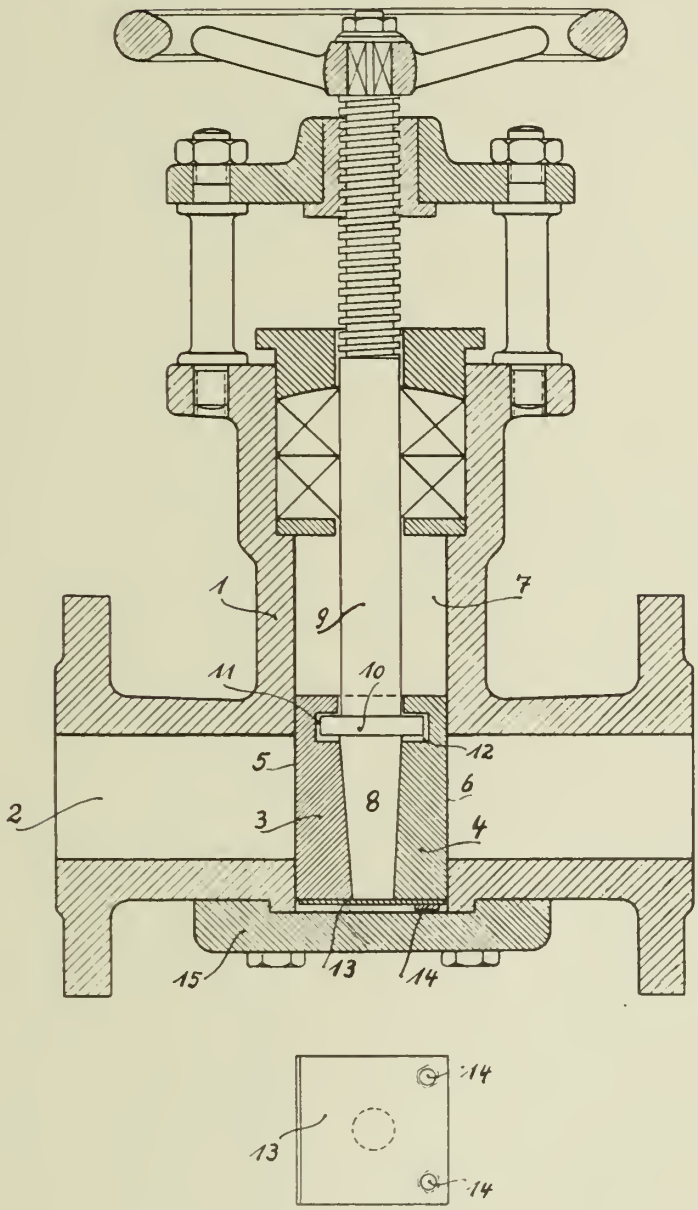

Inventor:
Bernhard Vervoort
by Knight Bros
Attorneys

Published May 25, 1943

Serial No. 319,977

ALIEN PROPERTY CUSTODIAN

SUPPORTING AND ACTUATING MEANS FOR A VERTICALLY RECIPROCATING MEMBER

Carlo Schleifer, Milan, Italy; vested in the Alien Property Custodian

Application filed February 20, 1940

In existing machines for spinning, twisting, winding-on and doubling, there are movable members actuated with a vertical reciprocating movement. The carriage that carries the spindles in fly frames, the spindle carriage or ring rail in continuous spinning or twisting ring frames, and the ring rail that carries the thread guides or bells in certain special spinning machines, are members of this nature.

In the constructions hithereto known, these movable members are supported, guided and actuated by the aid of vertical rods or pokers sliding in the sleeves or couplings substantially integral with the frame of the machine, and actuated through the medium of suitable transmission members by a rod extending in the longitudinal direction of the machine and actuated with a reciprocating motion by the winding-on eccentric or other equivalent kinematic drive.

This arrangement exhibits various disadvantages. Above all in machines of considerable length, such as spinning machines, it is difficult to ensure and maintain correct parallelism between the guiding rods, and it is also difficult to effect the lubrication thereof for the purpose of ensuring smooth sliding in the interior of the coupling sleeves in which the said rods slide with accurate adjustment. There are consequently considerable losses by friction, and a great expenditure of motive power. Furthermore, owing to the fact that the movable member is positively driven only during its ascent, whereas its descent is accomplished under the action of gravity, this member cannot be accurately balanced for the purpose of reducing the expenditure of motive power.

Now the present invention, the object of which is to obviate the aforementioned disadvantages, relates to a device for supporting and actuating the said movable members, according to which each member is not supported and actuated by rigid rods, but is on the contrary suspended by the aid of flexible members from driving members having an oscillating rotary movement, with which the said flexible members are positively engaged, and in relation to which they unwind now in one direction and now in the opposite direction, so that the movable member suspended therefrom executes a vertical ascending and descending movement.

These flexible members may be continuous, that is to say, in the form of a closed ring, unwinding also in engagement with tensioning members, so as to ensure the actuating of the movable member both during its ascent and during its descent, thereby enabling the weight to be accurately balanced.

According to a further feature of the present invention the unit comprising all the movable members of the entire machine is subdivided into a plurality of unit movable members of small length, which are separately actuated. In this way the disadvantages arising from any lack of parallelism between the vertical guiding members and the totality of the movable members is reduced to a minimum.

Some forms of construction of the invention are diagrammatically illustrated merely by way of example in the accompanying drawings, in which

Figures 1 and 2 show in side elevation and in transverse section respectively the drive for the spindle carriage of a spinning or twisting machine;

Figure 3 is a view similar to Figure 2 showing a modification;

Figure 4 shows an end view of a device for superposing upon the alternating movement of the spindle carriage an intermittent slow vertical movement which is always in the same direction;

Figures 5 and 6 show two forms of bobbins that may be constructed with this spindle carriage drive;

Figures 7 and 8 show on a larger scale two forms of flexible suspension members for the movable member, and the drive associated therewith;

Figure 9 shows in side elevation a modification in the drive of the spindle carriage; and

Figures 10 and 11 show in side elevation and in transverse section respectively another modification.

According to the embodiment illustrated in Figures 1 and 2, each of the spindle carriages of the two halves *a* and *a'* that constitute the continuous spinning or twisting frame is subdivided into a plurality of elements 1 and 1' of limited length. Each of these elements, carrying the spindles 2 and 2', is so guided as to be capable of sliding in a vertical direction by the aid of sleeves or couplings 3 and 3' along the guide rods 4 and 4', which are substantially integral with the frame 5 of the machine. Each of the elements 1 and 1' is suspended by the aid of a flexible member 6 or 6', in the form of a closed or continuous ring, to which it is anchored at a point 6° and 6°', while these members are in positive engagement with driving wheels 7 and 7', keyed on to transverse shafts 8, rotatably supported by fixed bearing brackets 9 substantially integral with the frame 5. These flexible members are also engaged with tensioning wheels 10 and 10', keyed on to transverse shafts 11, which are also rotatably supported by the frame 5.

The flexible suspension members may consist of chains, as shown in Figure 7, and in this case the wheels 7 and 7' are ordinary toothed wheels with which the chains mesh; or alternatively they may be constituted by a cable or by a me-

tallic tape, anchored by the aid of a peg 12 to the periphery of the wheel 7 or 7′, which is then in the form of a flanged cylinder, as shown in Figure 8.

For the actuating of the various elements of the spindle carriage a rod 13 is provided, which is so guided as to be capable of sliding in the longitudinal direction of the machine, and is actuated with a reciprocating motion by the winding-up eccentric 14 or other equivalent member. In the example illustrated this member is constituted by a cylinder cam with a groove 14′, in which there engages a roller 15, which is secured to the rod 13. The rod 13 is provided at suitable points with screw threaded portions or worms 13′, which mesh with worm wheels 16, keyed on to the shafts 8. During the reciprocating movement of the rod 13 these threaded parts 13′, by functioning as racks, impart to the wheels 16, and consequently to the shafts 8 and to the wheels 7 and 7′, an oscillating rotary movement, which, through the medium of the flexible members 6 and 6′, is converted into an alternating vertical movement, which is positively controlled both during the ascent and during the descent of the elements 1 and 1′ of the spindle carriage.

With a view to reducing the force required for the raising of the elements 1 and 1′ of the carriage, these elements may be accurately balanced by the aid of counterpoises 17, acting through the medium of flexible members 18 upon pulleys 19 keyed on to the shafts 11. Alternatively the weight of the elements 1 may be directly balanced with the weight of the elements 1′ on the other half of the machine, through the medium of the same flexible suspension members 6 and 6′, by so arranging matters that while one element 1 is ascending the other is descending, and conversely, as diagrammatically indicated in the modification illustrated in Figure 3.

With the simple vertical alternating movement impressed upon the elements 1 and 1′ of the spindle carriage, cylindrical bobbins such as the bobbin 20 of Figure 6 may be obtained, having a height h equal to the amplitude of the alternating movement impressed upon the said elements. It is however also possible to obtain bobbins with a conical point, such as the bobbin 21 of Figure 5, if there is impressed upon the longitudinal rod 13, in addition to the alternating movement necessary for impressing upon the elements 1 and 1′ of the carriage a vertical alternating movement of amplitude h' equal to the height of winding of the stretch, an intermittent rotary movement in a suitable direction. The screw threaded portions 13′, by also functioning as endless screws or worms, will then impress upon the worm wheels 16 an intermittent rotary motion, so that upon the alternating movement of amplitude h' of the elements 1 and 1′ there will be superposed an intermittent progressive raising or lowering movement of amplitude H, which will determine the formation of the bobbin 21 of Figure 5.

In order to impress upon the rod 13 an intermittent rotary movement, recourse may be had for example to the device shown in Figure 1, and in detail on a larger scale in Figure 4. According to this device, there is made substantially integral with the rewinding eccentric 14 a heart-shaped cam 22, designed to actuate, with a reciprocating motion, a push rod 23, which, owing to the fact that it is jointed to one of the arms of a bent lever 24 oscillatably mounted upon a shaft 25, causes this lever to oscillate. The other arm of the lever 24 is provided with a pawl 26, engaging with a ratchet wheel 27, which is substantially integral with a wheel 28, which, by the aid of a chain 29, transmits the motion to another wheel 30, which is keyed by means of a sliding key 31 to the end of the rod 13. At each revolution of the rewinding eccentric 14 there is impressed upon the rod 13 a small intermittent rotary movement, so that upon the alternating vertical movement of the elements 1 and 1′ of the carriage there is superimposed a slow descending movement, in such a manner as to obtain the bobbin 21 shown in Figure 5. If, instead of the spindle carriage, it was a question of the ring rail, the said slow movement would have to be an ascending movement, which would be obtained by impressing a reverse rotation upon the rod 13, or else by making use of an inverse pitch for the screw 13′.

The flexible members 6 and 6′ that support the elements 1 and 1′ of the carriage may equally well be discontinuous, as shown in Figure 9. In this case the said flexible members, still engaging with the actuating wheels 7 and 7′ keyed on to the shafts 8, which are actuated with an oscillating rotary motion, are anchored at one end, at 6° and 6°′, to the element of the carriage, while at the other end they are urged by a force F, constituted by a counterpoise or a spring, with a view to balancing the weight of the elements 1 and 1′ of the carriage. Alternatively the weight of the elements 1 may be balanced directly against the weight of the elements 1′ on the other half of the machine through the medium of the same flexible suspension members 6 and 6′, on the actuating wheels 7 and 7′ and on the shafts 8, by arranging matters in such a way that when one element 1 rises the other element 1′ descends, and conversely, as indicated diagrammatically in Figures 10 and 11.

When discontinuous flexible elements are employed, as in the examples illustrated in Figures 9, 10 and 11, the positive actuation of the elements 1 and 1′ of the carriage takes place only during the ascent, whereas the descent is effected under the action of gravity.

In the device for supporting and actuating the movable members hereinbefore described, owing to the suspension and the actuation of these movable members by the aid of flexible members, and furthermore owing to the subdivision of these movable members into a plurality of short elements, the friction along the guiding members 4 and 4′ is reduced to a minimum, either owing to the fact that accurate adjustment of the guiding sleeves 3 and 3′ is no longer required, or else owing to the fact that any defects of parallelism between the guiding members of the various elements have no influence. The expenditure of motive power for the actuation of the machine is thus considerably reduced, while all the disadvantages presented by the actuating devices hitherto known are eliminated.

Although the invention has been described in its application to the actuation of the spindle carriage of a ring spinning frame or ring doubler, it is obvious that with appropriate modifications, and without going outside the scope of the invention, it is equally applicable to the actuation of the ring rail of these same spinning or twisting machines, or to the bell-carrying rail or thread guide rail in certain special spinning machines, and in general to any movable member of spinning, twisting, winding-on and like machines.

CARLO SCHLEIFER.

PUBLISHED

MAY 25, 1943.

BY A. P. C.

C. SCHLEIFER

SUPPORTING AND ACTUATING MEANS FOR A VERTICALLY RECIPROCATING MEMBER

Filed Feb. 20, 1940

Serial No. 319,977

2 Sheets-Sheet 1

Fig. 1

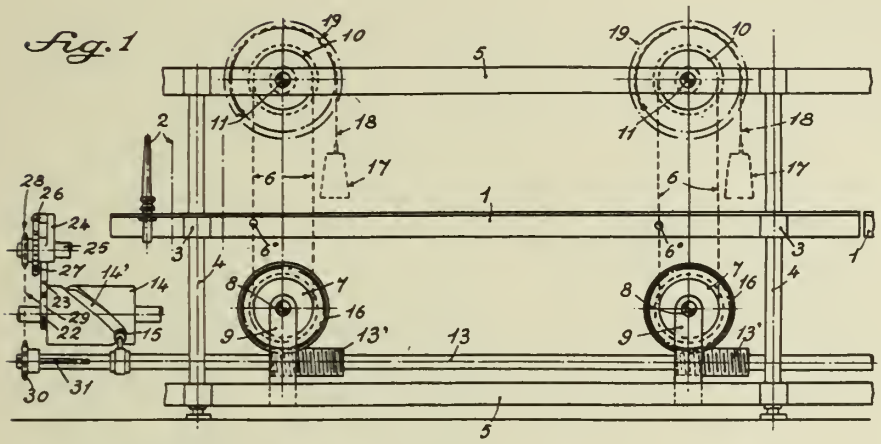

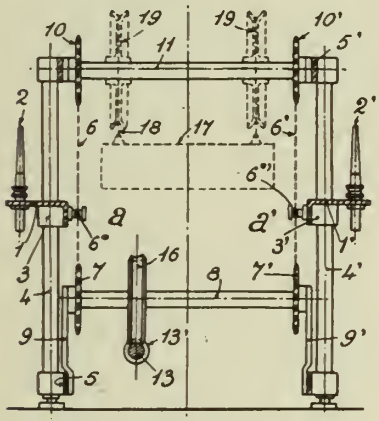

Fig. 2.

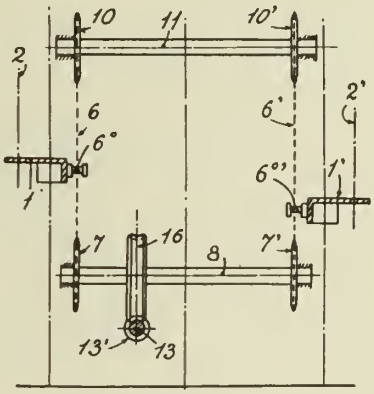

Fig. 3

Fig. 4

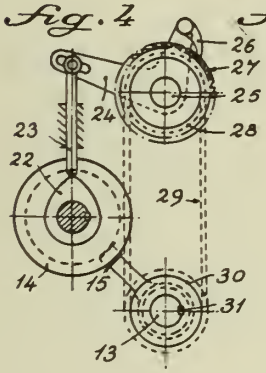

Fig. 5

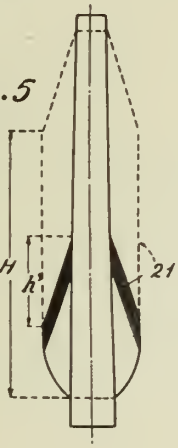

Fig. 6

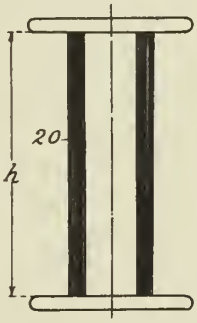

Inventor,
C. Schleifer

By: Glascock Downing & Seebold
Attys.

PUBLISHED

MAY 25, 1943.

BY A. P. C.

C. SCHLEIFE R

SUPPORTING AND ACTUATING MEANS FOR A VERTICALLY RECIPROCATING MEMBER

Filed Feb. 20, 1940

Serial No. 319,977

2 Sheets-Sheet 2

Fig. 7

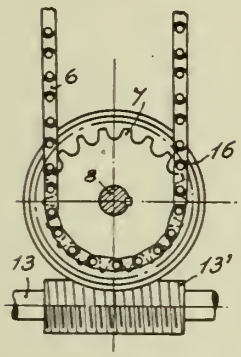

Fig. 8

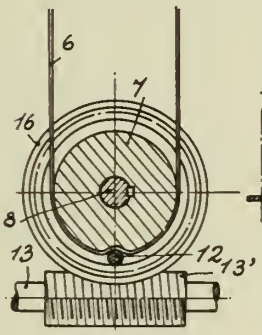

Fig. 11

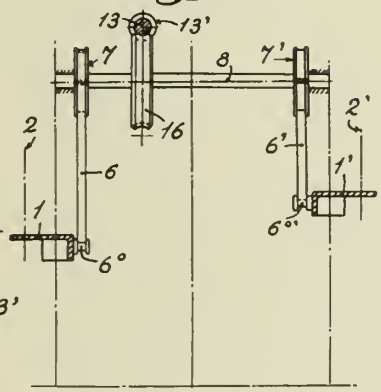

Fig. 9

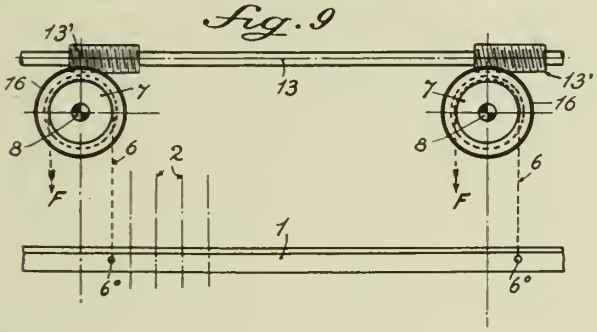

Fig. 10

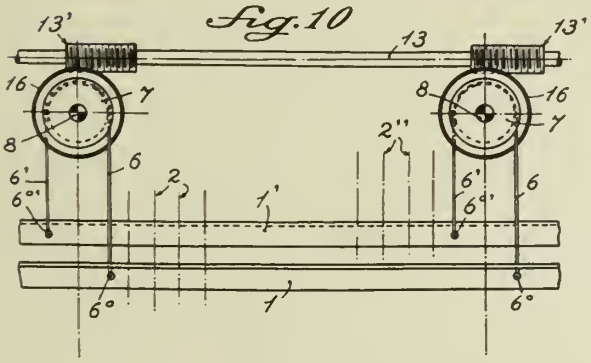

Inventor,
C. Schleifer

By: Glascock Downing & Seebold
Attys.

Published May 25, 1943

Serial No. 320,217

ALIEN PROPERTY CUSTODIAN

LUBRICATING SYSTEMS

Werner Schmidt, Torino, Italy; vested in the Alien Property Custodian

Application filed February 21, 1940

The present invention is concerned with lubricating systems and relates more particularly to lubricating systems in which the lubricant is fed to bearing surfaces through the pores of a piece of porous metal.

Hitherto, it was customary to use for this kind of lubrication oil or the like fluid lubricants, which passed through the pores of the porous metal under the action of capillarity. According to the present invention, non-liquid lubricants are used and are fed past the porous metals, by means of pressure exerted on the lubricant.

It is therefore an object of the invention to lubricate bearing surfaces by pressing non-fluid lubricants or lubricants of pasty consistency through porous metal walls onto the respective bearing surface.

It is another object of the invention to provide a lubricating system for bearing surfaces in which a pressure exerting member cooperates with a supply of lubricant within a reservoir arranged adjacent or in constant contact with a member consisting of porous metal.

According to one modification of the invention, the reservoir may be arranged at the outside of the porous member, whereas according to another modification the reservoir may be located, at least partly, within the porous member. Lubricating systems containing porous metal are advantageous because they provide for sufficient lubrication without requiring a renewal of lubricant for relatively long periods of time. This desirable characteristic is increased in the lubricating systems according to the invention, which are adapted for the use of pasty or semi-solid fats. Moreover, the lubricating properties of pasty lubricants are for many purposes superior to those of liquid lubricants. Furthermore, the rate of lubrication may be easily controlled by adequately adjusting the pressure exerted on the lubricant within the reservoir.

Hitherto, it was necessary to pretreat the porous metal member prior to its being used for lubricating purposes by placing it for many hours in an oil bath or the like, in order to saturate the member with the lubricant. This step had to be repeated for renewal of the oil after certain periods of time. According to the invention, this step is dispensable, and accordingly the period of interruption of the running of a machine is substantially shortened for renewal of lubricant with the present lubricating systems, as compared with previously known porous metal systems. The system according to the invention may be so designed as to allow of a renewal of lubricant without interrupting the operation of the respective machine.

I preferably use for lubricating systems according to the present invention porous metal having relatively large pores. The size of the pores is to be chosen in dependency on the type of fat and on the working conditions of the respective case, and may be readily determined by a few preliminary tests. The manufacture of metal having large pores is known per se. Preferably this is carried out by sintering coarse particles of the starting material by means of high frequency. Small pieces of steel wire with the addition of some copper powder may be used, as well as milling chips or the like.

Thorough investigations have led to the result that porous metal the pores of which are sufficiently large to allow the passage of solid or plastic fats, still possess sufficient strength to take up the load to which bearings are usually subjected. The invention is, for instance, well adapted for use in connection with the bearings of top rollers or drawing rollers of spinning spindles, as well as for many other purposes.

In order that the invention may be more readily understood, reference is made to the annexed drawings showing by way of example various forms of the invention.

Fig. 1 illustrates schematically a shaft for top rollers having separate lubricating systems for the two porous bearing members.

Fig. 2 shows a shaft for top or drawing rollers in which both bearing members are commonly provided with lubricant.

Fig. 3 illustrates on an enlarged scale a cap structure adapted for use in connection with the device shown in Fig. 1 as well as that shown in Fig. 2.

Fig. 4 shows a bearing member provided with a pressure bush to be filled, for example, with so-called "Staufferfett".

Referring now to Figure 1, a bearing member is shown which is adapted to support two top rollers (not shown) on the end portions of the shaft, said end portions **3** and **4** consisting of porous bearing metal. Center portion **5***a* supports the weight (not shown), and preferably consists of solid metal. Portions **3** and **4**, which possess relatively large pores, are provided with inner bores **5** and **6** into which is filled the lubricant under pressure. Borings **5** and **6** are provided with non-return or reaction flap closure, as shown at **9** and **10**. The pores may be sealed, as by a coating **7**, **8** of varnish or lacquer, at those

outer faces of members 3 and 4, which do not serve as bearing faces.

Figure 2 illustrates a modified structure with one non-return closure only. The porous bearing pieces 13 and 14 are lubricated from one center boring 11 extending through both said pieces. Boring 11 may be drilled from one end of the shaft, and that end may be then closed by means of pin 12. Boring 16 through which the lubricant is introduced, is located within the massive center portion 15. Fat is pressed through boring 16 into the lubricating chamber 11, and boring 16 is then closed by means of a suitable closure.

Figure 3 is an enlarged view of one end of the structure shown in Figure 1. The boring which serves as reservoir for the lubricant, is provided with an enlarged portion 21 which receives a spring 24 one end of which abuts shoulder 22. Spring 24 carries a ball 23 which, by means of the spring pressure, is forced outwardly against the tapered walls 25 of the boring, thereby closing it. As already mentioned, borings 5 and 6 of the structure shown in Figure 1 are filled from both ends, whereas the structure shown in Figure 2 is filled through the massive center portion 15. The closure shown in Figure 3 is also adapted for the latter structure. It is to be understood that while the reservoirs are filled, ball 23 is forced away from the tapered walls 25, thereby giving free entry to the lubricant. When the pressure applied during the filling step is released, ball 23 returns to the closed position under the action of spring 24, the fat within the reservoir thus being held under pressure.

Figure 4 shows a porous bearing bushing 32 for shaft 31. Bushing 32 is located within casing 33 provided adjacent bushing 32 with a hollow space 34 accessible from the outside by means of bore 35. Bore 35 is provided with an adjustable lubricating device 36 of per se known structure, adapted to be filled with "Staufferfett" or the like. Faces 37 and 38 of the porous member 32 are sealed by a coating of varnish against the passage of lubricant, as otherwise dust might accumulate on these surfaces.

The fat passes from bush or container 36 into the hollow space 34, and is pressed through porous member 32 onto the bearing surfaces. The pressure may be varied by suitably adjusting the screwed cap of member 36. Also, a fresh supply of fat may be provided without interrupting the running of shaft 31.

Preferably, I use for the lubricating system shown and described a semi-solid or pasty high-grade fat, such as the type of fat sold in Germany under the trade name of "Staufferfett." The fat may be used with or without addition of graphite, as I have ascertained that a mixture of pasty fat and graphite, too, may be pressed through the pores of porous bearing metal.

The use of pasty or semi-solid fats instead of oils and the like liquid lubricants is advantageous for the further reason that soiling of the respective machine and of the goods under treatment is prevented. This is an important factor, for instance, in the lubrication of top roller shafts of spinning spindles. A further advantage resides in the fact that the rate of lubrication may be varied at any time without interrupting the working of the machine, by accordingly adjusting the pressure exerted on the lubricant.

WERNER SCHMIDT.

PUBLISHED
MAY 25, 1943.
BY A. P. C.

W. SCHMIDT
LUBRICATING SYSTEMS
Filed Feb. 21, 1940

Serial No.
320,217

Fig. 1

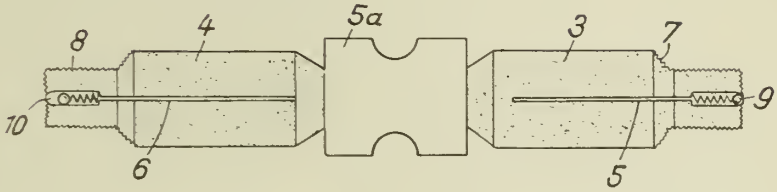

Fig. 2

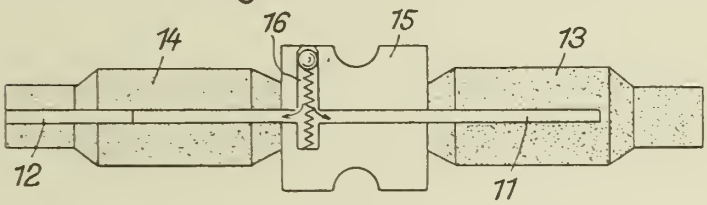

Fig. 3

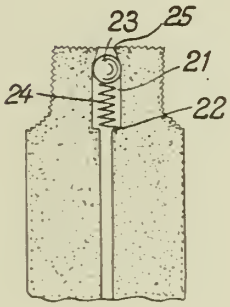

Fig. 4

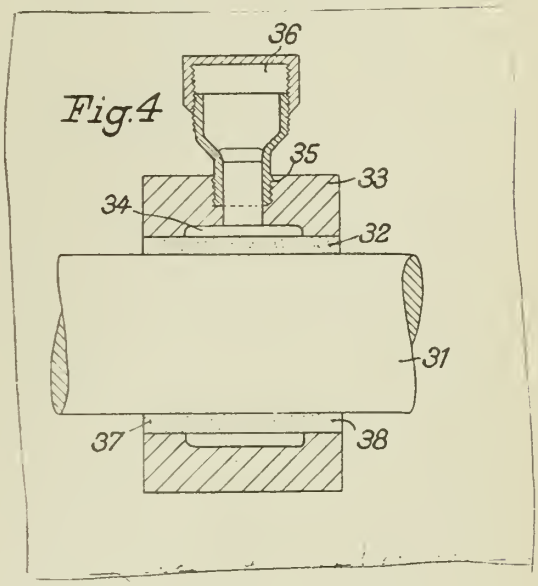

Inventor:
Werner Schmidt

By H. B. Willson & Co
Attorneys

Published May 25, 1943

Serial No. 320,937

ALIEN PROPERTY CUSTODIAN

CONTROL SYSTEM AND METHOD ESPECIALLY FOR RAILWAY CAR CLASSIFICATION YARDS

Jean Rabourdin, Paris, France; vested in the Alien Property Custodian

Application filed February 26, 1940

The present invention relates to devices for the giving movable bodies a controlled displacement and, in particular, automatically controlling the movement of railway cars in classification yards, so as to cause said cars to move under predetermined speed and spacing conditions.

The chief object of the present invention is to solve the following problem: These movable bodies (railway cars) move along a given path and they can be acted upon only at certain points of said path and it is desired to obtain, among other things, a predetermined average, maximum or minimum speed at a further point of said path. It should be well understood that as the conditions of displacement of the successive movable bodies or cars are not the same, only average, maximum or minimum speeds can be considered.

At the points where the movable bodies (cars) can be acted upon, said bodies are subjected to accelerating or braking actions which are determined, for instance, by prior running or speed conditions. But the action to be applied at these points depends upon other factors, which cannot practically be determined in advance. According to an essential feature of the invention, this preliminary determination of these conditions is replaced by an "a posteriori" control responsive to indications taken at points where it is possible to ascertain whether the speed of the cars, or other movable bodies complies with the desired conditions.

According to the invention, these indications will be registered and they will be caused to influence the adjustment of the accelerating or braking means so as to correct the error which will thus eventually have been found to exist.

In other words, according to the invention, the adjustment of the accelerating or braking means is modified by successive approximations indicated by the errors found precedingly to exist. This can be considered as an automatic, or mechanical, application of the methods used in artillery for finding the exact range of an objective, and which consist in modifying the firing elements in view of the error precedingly found by observation.

In the particular case of the speed control of railway cars in a classification yard two chief problems are to be considered:

a—As, in the switch zone, there are braking devices which can be used for obtaining a given speed of the railway cars when they reach the point from which start the various classification tracks, a speed measuring device placed at this point is used for automatically controlling the action of the braking devices in question.

b—As other braking devices can be placed at the entrance of each classification track for obtaining a given speed of the railway cars as they come into contact with other cars already stopped on these classification tracks, means for measuring the speed of said moving cars as they come into contact with these stationary cars are used for automatically controlling said braking devices.

Other features of the present invention will result from the following description of some specific embodiments thereof.

Fig. 1 is a diagrammatic view of an embodiment of the invention as applied to the braking control of railway cars;

Figs. 2 and 3 are parts of a detailed diagram of such an embodiment, these two Figs. completing each other;

Fig. 4 shows a modification of the apparatus of Figs. 2 and 3.

Fig. 1 shows a railway track element on which cars (one of which is diagrammatically shown at W) are running from right to left under the effect of an impulse imparted, in any suitable manner, on the right hand side of the drawing. At F, I have diagrammatically shown a car braking device of any suitable type. This device F is actuated by an electric motor Y, controlled by any one of the three relays R_1, R_2 and R_3, in such manner that the intensity of the braking action exerted by apparatus F has a high value when the motor is controlled through relay R_3, a mean value when the motor is controlled through relay R_2, and a low value when the motor is controlled through relay R_1.

The energizing of these relays R_1, R_2 and R_3 is made from a battery K one terminal of which is directly connected to motor Y, while the other terminal is connected to the pivot of a brush **22**. The end of this brush **22** passes successively on contacts a_1, a_2, a_3, a_4, a_5, a_6, a_7, a_8, a_9, a_{10}, a_{11}, a_{12}, a_{13}, a_{14}, a_{15} arranged along a circular arc.

Contacts a_1 to a_5 inclusive are electrically connected to one another and to relay R_1. Contacts a_6 to a_{10} inclusive are electrically connected to one another and to relay R_2. Contacts a_{11} to a_{15} inclusive are electrically connected to one another and to relay R_3.

Thus, when brush **22** is on one of the first five contacts a_1 to a_5 motor Y is controlled through relay R_1 and produces a relatively low braking of the cars, such as W, by apparatus F. The

presence of brush **22** on any one of the five next contacts a_6 to a_{10} corresponds to a medium braking being exerted by apparatus F. Finally, the presence of brush **22** on any of the last five contacts a_{11} to a_{15} corresponds to a high braking action.

Brush **22** is driven by a device S, called "selector" of any suitable type actuated by electric impulses and such that, under the effect of each impulse that is received, apparatus S causes brush **22** to turn, through an angle equal to the angular interval between two consecutive contacts, in the direction of arrow F_2 when the electric impulse that is received is produced by current flowing in one direction through S and in a direction opposed to arrow F_2 when the direction of this current is reversed.

The electrical impulses are transmitted from a battery K' to device S through two lines **13** and **18** leading to contacts **10** and **11**.

Then contacts cooperate with a rotating brush **3** electrically connected to one terminal of battery K' the other terminal of which is directly connected to one of the terminals of device S.

Furthermore, brush **3** can pass on an electrically insulated intermediate contact stud **12**.

This brush **3** is controlled by an apparatus E, located at the point X of the track where it is desired to have all the cars passing at speed V. This apparatus E is adapted to control at any time the position of brush **3**, as a function of the speed of the car which has just passed at X in such manner that:

a—brush **3** is on insulated contact stud **12** when the speed of the car that has just been passing is equal to the desired speed V;

b—brush **3** is on contact **11** when the speed of the car that has just been passing is lower than V;

c—brush **3** is on contact **13** when the speed of the car that has just been passing is higher than V.

A device E' is interposed in the circuit of battery K' so that, whenever brush **3** comes on one of the contacts **10** and **11**, a short electric impulse flows through the circuit thus closed.

Lines **13** and **18** are connected to terminals of device S arranged in such manner that, when the current impulse supplied by battery K' passes through line **13** (case of brush **3** being located on contact **10** and, therefore, of a speed of the last car that has passed at X being higher than V), the direction of the current flowing through device S corresponds to the displacement of the brush **22** thereof in the direction of arrow F_2.

On the contrary, when the circuit of battery K' is closed across line **18** (case of brush **3** being located on contact **11** and therefore of the speed of the last car that has passed at X being lower than V), the direction of the current flowing through device S is reversed and corresponds to the displacement of the brush **22** thereof in the direction opposed to arrow F_1.

This device works as follows:

It will be supposed that, initially, brush **22** is located on contact a_6 (first contact of the middle group). The braking applied by apparatus F is a medium braking adapted to give the cars passing at X a speed equal to V.

As long as these conditions are complied with, brush **3** remains on contact **12**.

If a car passes at B with a speed higher than V, brush **3** comes on contact **10**. An electrical impulse is then transmitted from K' to device S through line **13** and, as above explained, this causes brush **22** to pass from contact a_6 to contact a_7.

If, immediately after this, a car passes at X with a speed lower than V, brush **3** comes onto contact **11** and an impulse is transmitted, through line **18**, to device S, which brings back brush **22** from contact a_7 to contact a_6.

Thus, it will be seen that, excepting the cars which pass at X with a speed equal to V, and which do not modify the position of brush **22**, the successive passage at X of five cars running at a speed higher than V will cause brush **22** to pass from group $a_6 \ldots a_{10}$ to group $a_{11} \ldots a_{15}$, which brings relay R_3 into play and increases the braking action of apparatus F. If a single car passing at X with a speed lower than V is intercalated in this series of five cars running at speeds higher than V, brush **22** is caused to move backward a distance equal to one interval and the brush remains on group $a_6 \ldots a_{10}$ corresponding to relay R_2.

Of course, the passage of the brush to group $a_1 \ldots a_5$ corresponding to a reduction of the braking action of apparatus F is produced by inverse conditions.

Now, it will be understood that, if accidental or temporary circumstances may cause the speed of one or two cars to vary, that is to say to be higher or lower than the desired speed V, the fact that five successive cars (or six out of seven successive cars, and so on) pass at a speed higher than V surely indicates a variation of the working conditions (atmospheric conditions for instance) which is sufficiently permanent to necessitate a modification of the adjustment of braking apparatus F capable of increasing the braking action thereof. Likewise, the consecutive passage of five cars at a speed lower than V corresponds to the necessity of reducing the braking action of apparatus F.

Thus, the apparatus above diagrammatically described ensures the adjustment of the braking device (and more generally, of the means for acting on the speed of cars and other movable bodies) as a function of the actual speed of the movable bodies as they pass at a given point of their path of travel, but in such manner as to eliminate the influence of accidental or temporary circumstances, whereby the adjustment of the braking or equivalent means is modified only if the circumstances under which the movable bodies travel along the track undergo a substantial and sufficiently permanent modification.

In other words, it is the variation of speed of the movable bodies at a given point, with reference to a given value, which conditions any modification of the adjustment of the means which act on said speed. But, in order to be sure that only variations of a sufficiently stable character will be taken into account, the adjustment of the means above mentioned takes place only if a series containing a given majority of variations of speed in one direction of the cars passing at the above mentioned given point.

In the above example, it has been supposed that there were five contacts corresponding to each relay R_1, R_2, R_3, but of course this number has been chosen merely by way of example. Likewise, instead of the three relays above mentioned, I might have any number of relays, corresponding each to a different action of the braking or equivalent means F.

Of course, relays R_1, R_2, R_3 do not necessarily act braking or analogous apparatus so as auto-

matically to modify the adjustment or operation thereof. The apparatus shown at F might be a signalling apparatus indicating to an operator which modifications are to be brought, either manually or otherwise, to the action of braking or analogous apparatus.

As for the various apparatus, such as S, E, etc. above mentioned, they can be made in many different ways, provided that they comply with the conditions above mentioned. I will now describe two embodiments of such apparatus.

Referring more particularly to Figs. 2 and 3, the place X of the track where the speeds of the cars are measured includes two points, corresponding to contacts p_1 and p_2 controlled by treadles or pedals P_1 and P_2 successively operated by the passage of each car.

In this embodiment, apparatus E comprises a rotary switch including three movable contacts 1, 2 and 3 keyed on a common rotary shaft as diagrammatically shown by dotted lines. Contact 1 is connected to the negative terminal of a source of electrical energy through a contact 4 closed at regular time intervals by a cam 5 revolving at constant speed under the action of a motor. Contact 1 is adapted to engage stationary contacts 6 which are all connected together (except for the first and the last but one, which are isolated) and it is adapted to move forward a distance equal to the interval between two successive stationary contacts whenever a movable armature 7 is attracted (or repelled as an alternative arrangement) by the coil 8 of a relay H, said coil 8 being connected to the positive terminal of said source of electric energy. Similarly, movable contact 2 is adapted to engage stationary contacts 9, all of which, except for the extreme ones, are connected to one another and to the negative terminal of the source. To movable contact 3 correspond stationary contacts distributed into three groups, to wit, group 10 comprising contacts initially engaged by movable contact 3 when it rotates in the direction of arrow *f*, group 11 comprising contacts ultimately engaged by the same movable contact 3, and an intermediate group, located between groups 10 and 11, and which, in the example shown consists of a stationary contact 12. Stationary contacts 10 are connected together as well as stationary contacts 11; the two extreme stationary contacts are insulated.

Group 10 is connected to the negative terminal of the source of electric energy through conductor 13 (broken at 100 between Figs. 1 and 2), the normally closed contact 14 of relay R_1, the normally closed contact 15 of relay L and the coil 17 of relay M. Group 11 is similarly connected to the negative terminal of the source of electric energy through conductor 18 (broken at 101 between Figs. 1 and 2), the normally closed contact 49 of relay R_n, the normally closed contact 19 of relay M and the coil 16 of relay L. The armature 20 of relay L is adapted to rotate through lever 21, the movable contact 22 of selecting device S in the direction of arrow F_1 by engaging ratchet wheel 23. The armature 24 of relay M is similarly adapted to move contact 22 through lever 25, but in the opposite direction (arrow F_2) by acting on ratchet wheel 26. Movable contact 22 is connected to the positive terminal of the source of electric energy and the coils of relays R_1 to R_n are connected to the negative terminal thereof.

The operation of the above described system will now be explained:

It will be supposed that movable contact 22 originally engages stationary contact *a*2. When a car moving from right to left (as shown by the arrow on Fig. 1) engages treadle P_1, it closes contact p_1, thereby energizing relay A. The coil 27 of relay A shifts its movable armature or fingers from right to left, thereby closing contact 30; then, whenever contact 4 is closed by cam 5, the coil 8 of relay H receives an impulse through the following circuit: positive terminal of the source, coil 8, conductor 31, contact 30, the normally closed contact 32 of relay B, conductor 33, fixed contacts 6, movable contact 1, conductor 34, contact 4, and the negative terminal of the source. Movable contacts 1, 2 and 3 are simultaneously moved step by step.

When the car engages treadle P_2, thus closing contact p_2, the coil 28 of relay B is energized and the above circuit is broken at 32, while relay C has its coil 38 energized through the following circuit: positive terminal of the source, the contact 36 of relay B since the contact armatures or fingers of B have been attracted from right to left, the coil 38 of relay C and the negative terminal of the source. As relay C is a slightly delayed action relay, i. e. its normally closed contact 37 is not immediately broken, movable arm 3 is momentarily connected to the positive terminal of the source through the contact 36 of relay B, the contact 37 of relay C and conductor 39. Therefore the position assumed by movable contacts 1, 2, 3 when they have stopped, indicates the speed of the car when running from treadle P_1 to treadle P_2.

Assuming that movable arm 3 has stopped (due to the energizing circuit of coil 8 being broken at 32) upon a stationary contact of group 10, then the hereinafter mentioned circuit has been momentarily closed from the time when contact 36 was closed until the time when contact 37 has opened; said circuit is the following: positive terminal of the source, the contact 36 of relay B, the contact 37 of relay C, conductor 39, movable arm 3, stationary contact group 10, conductor 13 (broken at 100 between Figs. 1 and 2), contact 14, the contact 15 of relay L, the coil 17 of relay M, and the negative terminal of the source. Since the coil 17 of relay M is thus energized, its armature 24 is attracted and simultaneously contact 19 is broken; when armature 24 is picked up, ratchet wheel 26 driven by lever 25 turns movable contact 22 a distance equal to the interval between two stationary contacts in the direction of arrow F2. Although the normal energizing circuit of relay R2, which is as follows; positive terminal of the source, movable contact 22, the coil of R2 and negative terminal of the source, is now broken, relay R2 is still energized through a stick circuit which is as follows: negative terminal of the source, relay R2, the contact 40 of relay R3, the contact 41 of relay R2, the contact 42 of relay R1 and positive terminal of the source.

Assuming that the movable contact arm 3 has stopped upon stationary contact 12, then no energization of relays in selecting device S can take place, and relay R2 remains energized through movable contact 22 as above described.

Assuming now that movable contact 3 has stopped upon a stationary contact in group 11, then the following circuit is closed: positive terminal of the source, contact 36 of relay B, contact 37 of relay C, conductor 39, movable arm 3,

the contacts of group 11, conductor 18 (broken at 101 between Figs. 1 and 2), contact 49 (Fig. 2), contact 19, coil 16 of relay L, and negative terminal of the source; in the same manner as above described, contact 22 is moved but now in the direction of arrow F1 a distance equal to the interval between two stationary contacts.

As above explained, relays R1 to R*n*, control, through armatures or movable fingers 41, 42 . . . 49, signal devices, motive devices or the like, an example of which is to be hereinafter described.

I will now explain how the speed detecting means or rotary switch E is restored to its original position. When relay B is energized and therefore contact 36 is closed, the coil 38 of relay C closes contact 43, with a certain lag, thus closing the following circuit: positive terminal of the source, coil 8 of the relay H, conductor 31, contact 43, conductor 44, movable contact finger 35, stationary contact finger 46, movable contact 2 (engaging one of the stationary contacts 9), stationary contacts 9, and the negative terminal of the source. Coil 8 is thus energized and picks up its armature 7, whereby movable contacts 1, 2 and 3 are rotated a distance equal to the interval between two successive stationary contacts, in the direction of arrow *f*, but, immediately, movable finger 45 attached to armature 7 opens the above energizing circuit of relay H, whereby armature 7 is dropped to its original position, carrying therewith movable finger 45; then the circuit is closed again and the same operation takes place until movable contact 2 reaches the extreme stationary contacts in the corresponding row i. e. until the switch resumes its original position.

I will now describe the case in which the apparatus according to the invention is employed in a car classification yard and automatically controls, as a function of the speed of cars at point X, a braking apparatus.

In this instance, relays R_1, R_2, . . . R_n are intended to govern the amount of braking imposed on the cars while they pass through the braking apparatus. According to the showing on Fig. 2, stationary contacts a_1, a_2, . . . a_n connected to respective relays R_1, R_2 . . . R_n, have between them four stationary contacts bearing no connection (the number four is optional and has been selected solely for illustrative purposes).

If a car has cleared the braking apparatus and passes at point X with a speed such that apparatus E brings its movable contact 3 on stationary contact 12, no electrical impulse is transmitted to the selecting means S and consequently, contact 22 remains on contact a_2.

If now, a car passes from the treadle P_1 to treadle P_2 at a higher speed, the movable contact 3 has not time enough to reach stationary contact 12 and is stopped upon one of the stationary contacts in group 10; consequently, as above explained, relay M causes movable contact 22 to rotate one step in the direction of arrow F_2. Should five successive cars have similarly a speed higher than speed V, then movable contact 22 will reach stationary contact a_3 in the selecting means S; accordingly, relay R_3 is energized and substituted, in so far as its effect is concerned, for relay R_2 because relay R_3 is energized by the following circuit: positive terminal of the source, movable contact 22, stationary contact a_3, coil of relay R_3, negative terminal of the source, and relay R_2 which was no longer directly energized, has now its stick circuit broken at the contact 40 of relay R_3 (the armatures of which are picked up). A stick circuit for relay R_3 is simultaneously closed as follows: negative terminal of the source, coil of R_3, contact 71 of relay R_{n-1}, contact 72 of relay R_3, contact 73 of deenergized relay R_2, contact 42 of deenergized relay R_1, positive terminal of the source.

Assuming that relay R_3 is arranged and constructed so as to cause the braking apparatus to exert a higher braking action than relay R_2, it will be understood that its substitution for relay R_2 tends to bring down the speed of the cars closer to the optimum value; should its action be insufficient, then the step by step movement of movable contact 22 continues in the same direction, whereby another relay R_4 is substituted for relay R_3 and so on.

As a specific example, it will be assumed that the braking apparatus is made as follows (Fig. 3). After treadles P_1 and P_2, the track comprises a plurality of braking sections, say three S_1, S_2, S_3. Each section is provided with a braking device F_1, F_2 or F_3 which includes a braking shoe (not shown) normally maintained in readiness for operation but adapted to be sidetracked and thus rendered inoperative by a motor. To each braking section is associated a treadle Q_1, Q_2 or Q_3.

When a car engages treadle Q_1, contact 50 is made and the following circuit: positive terminal of battery 51, coil 52 of relay T_1, conductor 53, contact 54, contact 50, contact 55, and negative terminal of battery 51, is closed whenever contact 55 is closed by cam 56 rotated at constant speed. Thus coil 52 receives a number of successive impulses whereby, as above described with reference to rotary switch E, armature 57 is successively picked up and dropped, simultaneously causing a step by step motion of contacts 58, 58', which are keyed on a common shaft, as conventionally indicated by dotted lines. The operation of this impulse device is well known and is substantially the same as described with respect to the speed detecting means E, so that no further explanation is needed.

It will be assumed that relay R_2 is directly energized through movable contact 22 being in engagement with stationary contact a_2. Contact 60 is then closed and the negative terminal of the main source is connected with the stationary contact b_2 of the rotary switch or impulse device T_1 through conductors 61 and 62, contact 60 and conductor 63. Assuming that the car has remained in engagement with treadle Q_1 for such a time that movable contact 58 has reached stationary contact b_2, the engagement of said contacts results in the closing of the following circuit: negative terminal of the main source, conductor 61, conductor 62, contact 60 of relay R_2, conductor 63, stationary contact b_2, movable contact 58, conductor 64, contact 70 of relay I_1, coil of relay G_1 arranged in braking sub-section S_1 and positive terminal. Relay G_1, thus energized, sets in section, in a well known manner, the braking shoe control motor (not shown) in section S_1 so as to side-track said shoe and accordingly the car is not braked in section S_1. Simultaneously, the energizing of relay G_1 causes contact 54 to be broken, thereby deenergizing the coil 52 of relay T_1 so that movable contacts 58, 58' are stopped. When the car leaves treadle Q_1, contact 65 is closed, thus completing the following circuit: negative terminal of battery 51, conductor 66, group of stationary contacts 59', movable contact 58', conductor 67, contact 65, coil I_1, contact 69 of relay T_1, coil 52 of relay T_1, and positive terminal of battery 51. Then, in known manner,

coil **52** picks up its armature **57**, which breaks the energizing circuit of coil **52**, by engaging movable contact finger **69**, so that armature **57** is dropped, thus releasing movable contact finger **69** which again completes the energizing circuit and so on; accordingly movable contacts **58**, **58'** are rotated step by step until they come back to their original position, as above set forth in connection with the speed detecting means E.

Assuming now that the car travels fast enough to leave treadle Q_1 before movable contact **58** reaches the first stationary contact in group **59**, which is now connected to the negative terminal of the source of electrical energy (i. e. in the case considered, stationary contact b_2) the above traced energizing circuit for the coil **52** of relay T_1 is broken at contact **50** so that movable contacts **58**, **58'** are stopped. Relay G_1 has not been energized, so that the braking shoe has remained on the track and is engaged by the car, thus braking it through section S_1. The movable contacts **58**, **58'** are restored to their original position as hereinbefore described. Provision is made for preventing a temporary closing of the energizing circuit of relay G_1 while movable contacts **58**, **58'** are being returned to their original position from taking place or for rendering it inoperative with respect to the braking device. In this connection, as shown on Fig. 3, during the return movement of contacts **58**, **58'**, the circuit including the negative terminal of the main source, conductor **61**, conductor **62**, contact **60** of relay R_2, conductor **63**, stationary contact b_2 of group **59**, movable contact **58**, conductor **64**, contact **70** of relay I_1, coil of relay G_1, and the positive terminal of the main source, is broken at contact **70** because relay I_1 is energized, its coil being inserted in the energizing circuit of the coil **52** of relay T_1 when the latter operates to return the movable contacts **58**, **58'** to their original position.

When, due to the action of the speed detecting means E, relay R_1 is substituted for relay R_2 as above described, stationary contact b_1 is connected to the negative terminal of the main source of electrical energy. If, on the contrary relay R_3 is substituted for relay R_2, the stationary contact connected to the negative terminal of the main source is b_3.

The operation of the other braking sections is similar to that of sections S_1 and need not be explained.

In the modification of Fig. 4, wherein the same references are applied to members already shown on Fig. 3, conductor **13** (broken at **100** between Figs. 1 and 3) is connected to the contact **49** of relay R_n, while another conductor **213** connects said contact with the coil **233** of relay T_1, said coil being connected with the positive terminal of the main source of electrical energy. Similarly, conductor **18** (broken at **101** between Figs. 2 and 4) is connected with the positive terminal of the source through the contact **14** of relay R_1, conductor **218** and the coil **231** of relay T_2.

Relay T_1 operates, through its armature **234** attached to a pawl **235**, a ratchet wheel **236** secured to a shaft carrying three movable contacts x, x', x''. Relay T_2 is similarly constructed and is likewise capable of rotating three movable contacts y, y', y''. The movable contacts are adapted to engage stationary contacts which are interconnected in the following manner: stationary contact **1** in the group B_y associated with relay T_2 is connected with stationary contact $1+p$ in the group B_x associated with relay T_1, stationary contact **2** in group B_y with stationary contact $2+p$ in group B_x and, generally speaking, stationary contact n in group B_y with stationary contact $n+f$ in B_x; in the specific example p is equal to **5**. On the contrary, stationary contact n in group B'_x (whatever be the specific value of n) is connected with stationary contacts $n+p$ in group B'_y (p being in this instance equal to **5**) and finally stationary contact n in group B''_x is connected with stationary contact n in group B''_y.

Movable contacts x, x' and x'' are directly connected to the positive terminal of the main source of electrical energy while movable contacts y, y' and y'' are connected to the negative terminal thereof through the coils of relays Z_1, Z_2 and I respectively. The armature **236** of relay Z_1 is adapted to drive a shaft **239** in the direction of arrow F_a, through its pawl lever **237** and a ratchet wheel **238**; similarly, the armature **240** of relay Z_2 is adapted to turn the same in the direction of arrow F_b. Upon shaft **239** is keyed a movable contact **222** analogous to contact **22** shown on Fig. 3 and two positions of which are shown by the drawing one in solid lines and the other in dotted lines. Relays R_1, R_2, R_n are now connected to successive stationary contacts adapted to be operatively engaged by movable contact **222**. When either relay Z_1 or relay Z_2 receives an energizing impulse, movable contact **222** is rotated to engage the next following stationary contact in the direction of arrow F_a or arrow F_b respectively. The operation is as follows:

Assuming that, as explained with reference to Figs. 2 and 3, an electrical impulse is received in the coil **233** of relay T_1 from the speed detecting means E through conductor **18**, the armature **234** is picked up and movable contacts x, x' and x'' are moved in the direction of the arrow a distance equal to the interval between two successive stationary contacts. Should an impulse be received in the coil **231** of relay T_1, then movable contacts y, y' and y'' are moved in the same direction and the same distance.

Assuming now that movable contacts x, x' and x'' have been brought ahead of movable contacts y, y' and y'' a distance corresponding to five successive stationary contacts, for instance if y, y' and y'' are in the positions shown by solid lines while x, x' and x'' are in the positions shown by dotted lines (i. e. if T_1 has received five impulses while T_2 has received none) the coil of relay Z_1 is energized by a circuit including the positive terminal of the main source, movable contact x, conductor **242**, movable contact y, the coil of relay Z_1 and the negative terminal of the main source; thereby relay Z_1 picks up its armatures and, on the other hand, the following stick circuit it closed; positive terminal of the main source, contact **243** of relay I, conductor **244**, contacts **245** and **246** of relay Z_1, the coil of relay Z_1, and the negative terminal of the source. On the other hand, armature **236** is picked up and rotates ratchet wheel **238** one step forward in the direction of arrow F_a and movable contact **222** passes from the position shown in dotted lines to the position shown in solid lines, so as to engage the next stationary contact in group a_1, a_2 . . . a_n. Furthermore, the energizing of relay Z_1 has caused contacts **247**, **248** to be closed. A circuit including the negative terminal of the main source, contacts **247**, **248**, contact **249** of relay T_2 and the positive terminal it then closed, and relay T_2 is energized to cause movable con-

tacts y, y', y'' to advance step by step until contact y'' reach stationary contact **16** in group B''_y connected through conductor **250** with stationary contact **16** in group B''_x, which is now engaged by movable contact x''. At this time, a circuit including the positive terminal of the main source of energy, movable contact x'', conductor **250**, movable contact y'', the coil of relay I and the negative terminal is closed; thus relay I is energized and cuts at **243** the stick circuit of relay Z_1; in view of the fact that contact **247**, **248** is broken and relay Z_1 is no longer energized, the energizing circuit of relay T_2 is broken.

Similarly, it will be seen that if the movable contacts of relays T_1 and T_2 are in the positions shown in solid lines, and if the coil **231** of relay T_2 receives from the speed detecting means, five successive impulses whereby movable contact y assumes the position shown in dotted lines, relay Z_2 receives an impulse and rotates shaft **239** in the direction of arrow F_b.

The movable contacts x, x', x'' and y, y', y'' are restored to homologous or corresponding positions in the same manner as above described.

As to the remainder of the arrangement it is identical to that described with reference to Figs. 2, 3 and needs not be again explained.

The present application is a continuation of my prior application Ser. No. 131,478, of March 17, 1938.

JEAN RABOURDIN.

PUBLISHED

MAY 25, 1943.

BY A. P. C.

J. RABOURDIN

CONTROL SYSTEM AND METHOD ESPECIALLY FOR RAILWAY CAR CLASSIFICATION YARDS

Filed Feb. 26, 1940

Serial No. 320,937

4 Sheets-Sheet 1

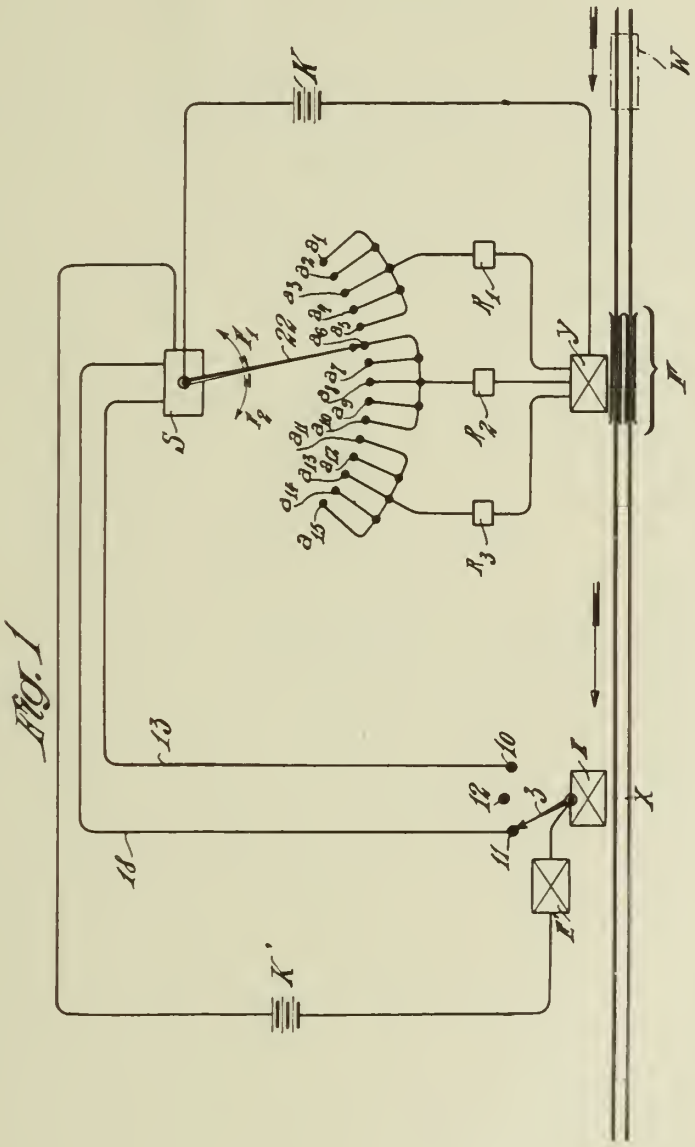

Jean Rabourdin

By

Watson, Cole, Grindle & Watson

Attys.

PUBLISHED

MAY 25, 1943.

BY A. P. C.

J. RABOURDIN

CONTROL SYSTEM AND METHOD ESPECIALLY FOR RAILWAY CAR CLASSIFICATION YARDS

Filed Feb. 26, 1940

Serial No. 320,937

4 Sheets-Sheet 2

Fig. 2.

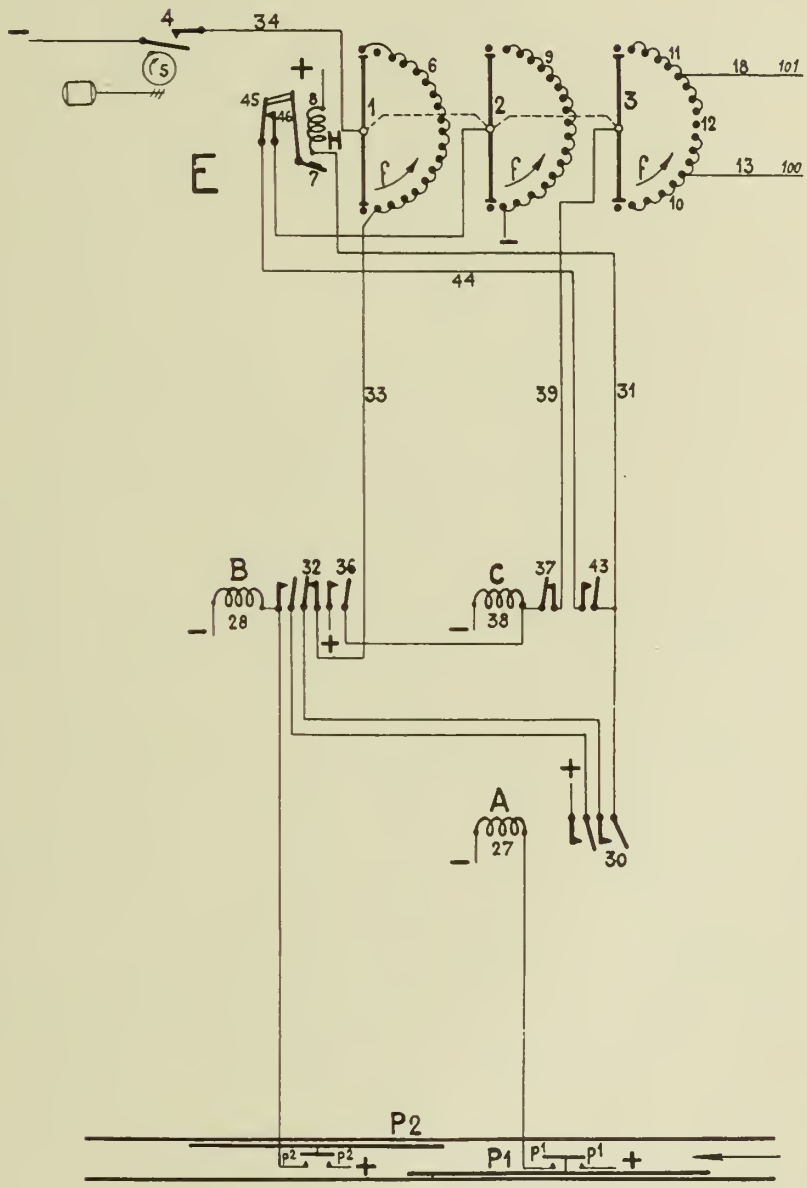

Jean Rabourdin

By

Watson, Cole, Grindle & Watson

Attys

PUBLISHED

MAY 25, 1943.

BY A. P. C.

J. RABOURDIN

CONTROL SYSTEM AND METHOD ESPECIALLY FOR RAILWAY CAR CLASSIFICATION YARDS

Filed Feb. 26, 1940

Serial No. 320,937

4 Sheets-Sheet 3

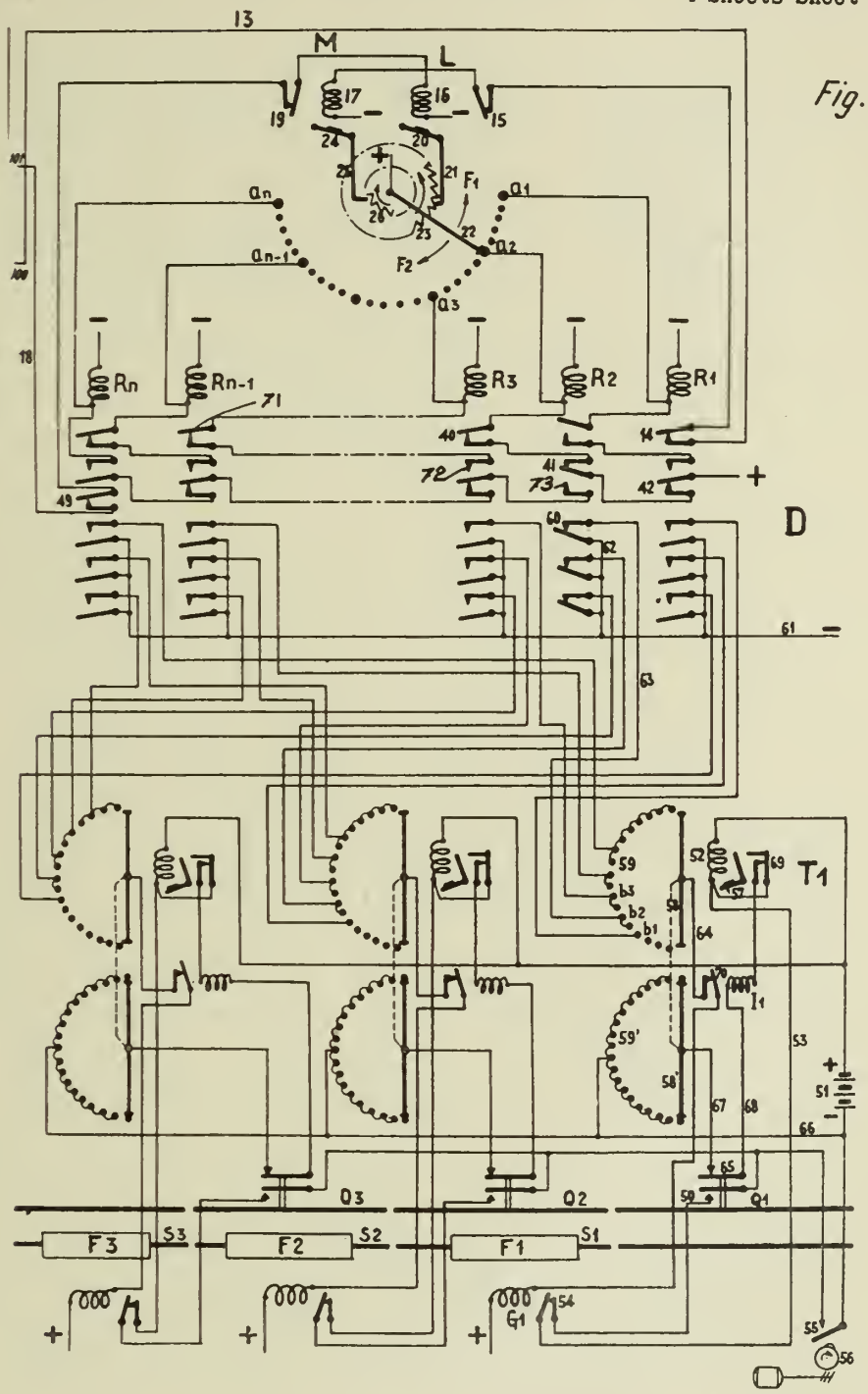

Jean Rabourdin

By

Watson, Cole, Grindle & Watson

Attys.

PUBLISHED

MAY 25, 1943.

BY A. P. C.

J. RABOURDIN

CONTROL SYSTEM AND METHOD ESPECIALLY FOR RAILWAY CAR CLASSIFICATION YARDS

Filed Feb. 26, 1940

Serial No. 320,937

4 Sheets-Sheet 4

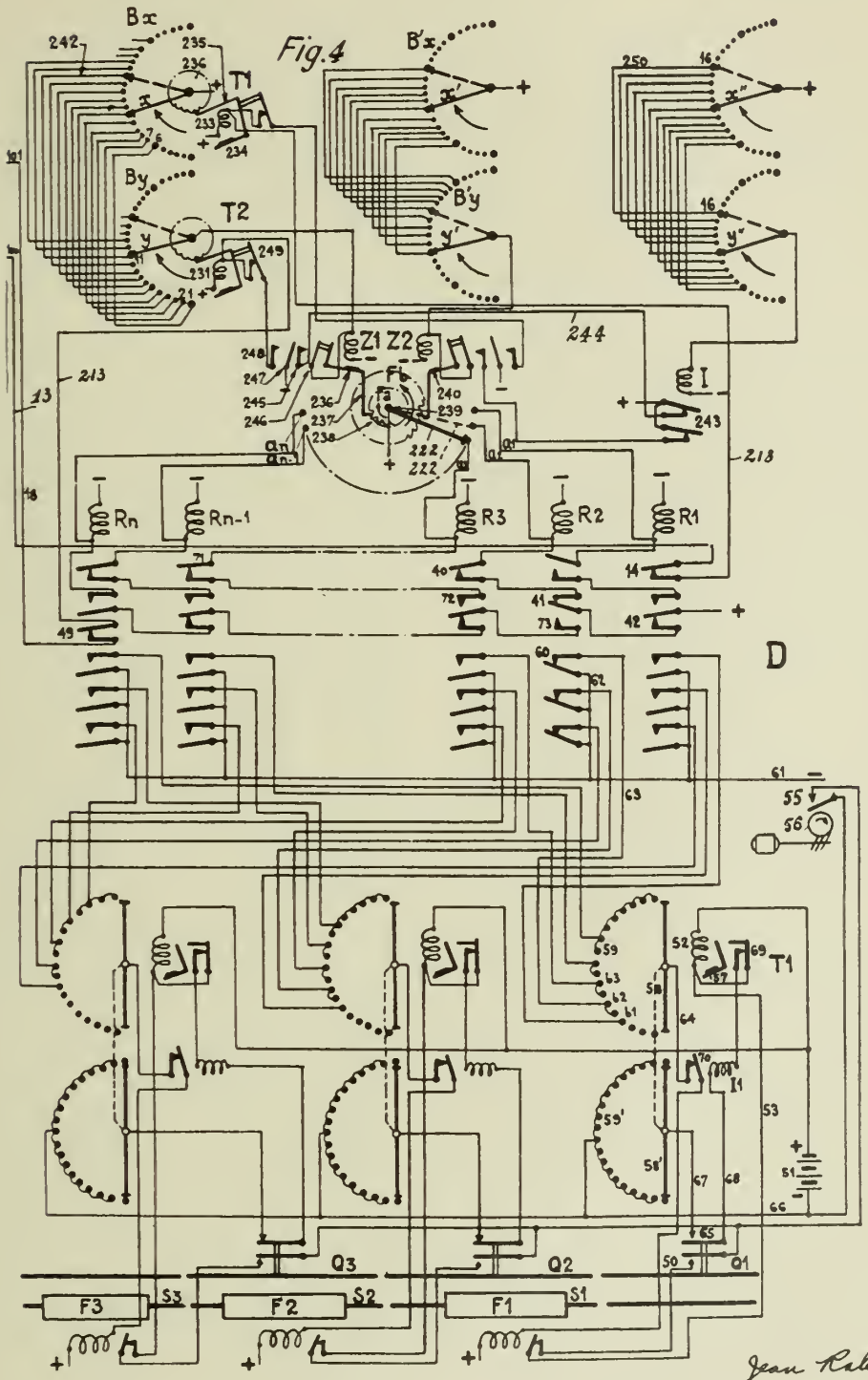

Jean Rabourdin

By

Watson, Cole, Grindle & Watson

Attys.

Published May 25, 1943

Serial No. 321,161

ALIEN PROPERTY CUSTODIAN

RECORD CARD FOR CARD CONTROLLED MACHINES

Georges Vieillard, Paris, France; vested in the Alien Property Custodian

Application filed February 28, 1940

The present invention refers to a record card for card controlled machines and especially to a record card in combination with an electrically operated printing tabulator or a sorter.

The card according to the present invention, may comprise printed or written records, and the analyzis of the card may be effected by photo-electrical devices which emit electric impulses timed in correspondence with the records which are analyzed.

The following description refers to a preferred embodiment of the invention and concerns a perforated record card which is analyzed by a well-known device comprising a series of brushes which in making contact through the perforations of the card establish the electric impulses in timed relation to the location of said perforations in the card.

A perforated card of known type is shown in Fig. 1. It comprises a number of vertical columns each of which contains ten index point positions representing the values from 0 to 9 and two additional index positions for control purposes. Index points of the same value are located on a horizontal line.

In order to indicate in a single vertical column any alphabetical letter without increasing the number of index point positions, it is known to represent a letter by two combined index point positions. In Fig. 1 is shown a card with a known code for this purpose. Said card may be analyzed in a known tabulating machine by one single row of contact brushes during the movement of said card; the printing device of said tabulating machine may comprise one single magnet for each interpreted column of the card and the complete analyzing and printing of an alphabetical card indication may be effected during one single cycle of the tabulator.

Another manner of interpreting a card with combined index point indications is to use two different analyzing devices, one device analyzing the upper and the second device analyzing the lower of two indications forming together a combined letter indication. In Fig. 2 is shown a card with a normal alphabetical code adapted for such machines. The analyzis and interpretation of such a card is generally effected during two cycles of the tabulating machine.

The upper indications 0, 11 and 12 are analyzed when the card passes a first analyzing device and the indications 9 to 1 are analyzed when the card passes a second analyzing device.

For the purpose of obtaining an increased number of vertical columns in a card of determined size, it is known to divide a card in two horizontal portions, each portion provided with a number of vertical columns which comprise each a certain number of index point positions for the indication of any value from 0 to 9. In case the number of index point positions in a vertical line of the complete card is not increased, some of the values from 0 to 9 in each portion must be indicated by combined indications.

In order to interpret such last mentioned cards, it has been hitherto necessary to change the construction of the ordinary above-named printing devices, or to use additional devices which transform the two electric impulses indicating in combination one single cipher, into one single impulse, timed to correspond to said cipher which should be printed.

Further it was necessary that a complete cycle of the printing device should correspond to an horizontal portion of the card, that is two cycles of the printing device were necessary to interpret a card divided in two horizontal portions. A printing device adapted to interpret such cards could not be used to interpret normal cards without important modifications.

An object of the present invention is a record card comprising one single set of horizontal lines of index point positions of the value from 1 to 9, which card is divided in two or more horizontal portions representing, by single or combined index point positions in each vertical column of each portion all values from 1 to 9, said portions being so arranged that both portions may be interpreted by one single passage of the card in the tabulating machine and by a printing device adapted to interpret the combined alphabetical indications of a card comprising one single set of values from 1 to 9 in each vertical column of the card.

Other objects of the present invention will be hereinafter set forth in the accompanying specification and claims and shown in the drawings, which by way of illustration show what I now consider to be the preferred embodiments of the invention.

In the drawings:

Fig. 1 shows a perforated card of normal type with alphabetical code, which card may be interpreted by a printing device with a single magnet for each interpreted card column, as shown Fig. 7 in full lines.

Fig. 2 shows a card with another alphabetical code. The interpretation of this card requires a printing device provided with two magnets for each interpreted card column, as shown in Fig. 7

dotted lines included. The operation of said two magnets is generally performed during two cycles of the machine.

Fig. 3 shows a card according to the invention divided in two horizontal parts, each part containing a certain number of index point positions to represent the values from 9 to 0 said values being partly represented by single index point positions and partly by combined index point positions arranged and adapted according to the invention to be read and printed by a normal printing device controlled by a single magnet for each printed character.

Fig. 4 shows a card according to the invention, adapted to be read and printed by a normal printing device controlled by two magnets for each interpreted card column.

Fig. 5 shows the connections between the printing device and the card shown in Fig. 4.

Fig. 6 shows the connections between the printing device and the card shown in Fig. 3.

Fig. 7 shows schematically a printing device adapted to interpret the cards shown in Figs. 1, 2, 3 and 4.

Fig. 8 is a longitudinal section of the right side of the sorting machine.

Fig. 9 is a plan view of the part shown in Fig. 8.

Fig. 10 is a longitudinal section of the sorting machine at the left hand side of the section shown in Fig. 8.

Fig. 11 is a plan view of the part shown in Fig. 10.

Fig. 12 is a wiring diagram of the sorting machine.

Figs. 13 and 14 show details of Figs. 8 and 9.

Fig. 15 shows details of Fig. 11.

According to the invention, the card shown in Fig. 3 is divided in two horizontal parts. The first part comprises the horizontal lines for the index point positions 9, 8, 1, 0, 11 and 12, and the second part the horizontal lines for the index point positions 7, 6, 5, 4, 3 and 2. Each column of each horizontal part may indicate any or all values from 0 to 9 according to the following codes:

Value	System I indication	System II indication
9	9	7 and 5
8	8	7 and 4
7	9 and 1	7
6	9 and 0	6
5	9 and 11	5
4	8 and 1	4
3	8 and 0	3
2	8 and 11	2
1	1	7 and 3
0	0	7 and 2
11	11	7 and 6

Fig. 6 represents how the columns of the card shown in Fig. 3 are connected to the printing device. From the current source 21, a line 22 leads to the brush 23 which makes contact with the contact roller 24. The reading of the two card columns 18 and 19 is effected by two brushes 26 and 27 connected to the plugs 28 and 29. From the plug 28, a line passing by the contact 30 leads to the printing magnet 53 and another line passing by the contact 34 leads to the magnet 58. From the plug 29, a line passing by the contact 31 leads to the magnet 54 and another line passing by the contact 35 leads to the magnet 59. The cams 32 and 33 close the contacts 30, 31 respectively when the indications of the card belonging to the system I pass the brushes, that is during the passage of the indications 9, 8, 1, 0 and 11 in front of the brushes, and the cams 36 and 38 respectively close the contacts 34 and 35 when the indications belonging to the system II, that is the indications 7, 6, 5, 4, 3 and 2 pass the brushes. In the example shown Fig. 6, the column 19 contains the perforations 8 and 1, in the part belonging to the system I, and the perforation 4 in the part belonging to the system II. Magnet 54 receives therefore the impulses 8 and 1 and magnet 59 receives a simple impulse 4. According to the code mentioned above, the figure 4 will be printed in both systems indicated by column 19. The figure 1 is indicated in both systems of the column 18, which indications cause an impulse 1 for magnet 53 and impulses 7 and 3 for magnet 58. Evidently the figure 14 for instance may be indicated by the two parts of the same column of the card.

Fig. 7 shows schematically a normal printing machine. All the cam shafts indicated are in gear connection with each other and make one revolution for every cycle of the machine and for every card that is analyzed. Said shafts are rotated by a motor by means of a gear train (not shown). The cam 70 permits the spring 71 by means of levers 72, 73 and 74 to impose an upward movement to the type rack 75 in synchronism with the passage of the card in front of reading brushes Fig. 6. Magnet 51 is energized a first time by a circuit established by one of the perforations 9, 8 or 7 of the card. The armature 76 by means of the rod 77 and lever 78 releases pawl 80 which is moved by the spring 81 and blocks sector 82 in one of three positions which correspond each to one of said perforations 9, 8 or 7. Sector 82 pivots about its fixed pivot 83 moved in clockwise direction by spring 84, cooperating with cam 85 and in synchronism with the passage of the perforations 9, 8 and 7 in front of the brushes Fig. 6. If there are no perforations 9, 8 or 7, sector 82 Fig. 7 will be stopped in the fourth position by the concentric part of the circumference of cam 85. During the passage of the perforations 9, 8 and 7 in front of the brushes Fig. 6, lever 86 Fig. 7 is blocked by the cam 87 so that the energization of magnet 51 during this period has no effect upon lever 86. Just before the perforation 6 passes the brushes, cam 87 ceases to block lever 86 which remains free from cam 87 during the period when the other perforations of the card pass in front of the brushes. When one of said perforations energizes the magnet again, the armature 76 is actuated, spring 88 rocks lever 86 and by means of the rod 90, pawl 91 which meshes with a tooth 92 of the type rack 75.

Pawl 91 pivots on sector 93 which, because of the upward movement of the rack 75 will swing in clockwise direction about its fixed pivot 94, until one of its steps 95 hits the left extremity of sector 82. For each of its teeth 92 which corresponds each to a perforation in one of the index point positions from 6 to 0 on the card, the rack 75 may therefore be stopped in one of the four positions according to the presence of a perforation in one of the index point positions 9 to 7 of the card, or to the absence of such perforation. When all the index point positions of the card have passed in front of the brushes Fig. 6, cam 97 Fig. 7 permits spring 98 to strike the hammer 100 against that one of the types 101 which is in printing position, whereby said type will be printed on the paper 61.

After the printing operation, the different cams 102, 85, 96, 97 and 70 restore lever 80, sector 82

and 93, lever 86 and rack 75 respectively, to their initial positions. The printing device described is adapted to print the values indicated by the perforations of a card according to Fig. 3; the magnets of the printing device are connected as shown in Fig. 6. When the indications are located as shown in Figs. 1 and 3, one single magnet 51 is necessary for each system for printing the indications of each columns of the card.

When the indications are located as shown in Figs. 2 and 4, an additional magnet is used for each column of the card, and the connections between the card and the printing device may be effected as shown in Fig. 5. In this case, the printing device does not include the rod 77, Fig. 7, but is provided with the additional parts represented with dotted lines. The printing of the values of two columns of a card according to the Figs. 5, 2 or 4 will now be explained by means of Figs. 5 and 7. In this case, the tabulating machine is provided with two card reading stations, so that the card will first be read by the brushes 110 and one cycle later by the brushes 124. When the card passes in front of the upper brushes 110, Fig. 5, the magnets 111 of both systems will be energized by the indications 0, 11 or 12. The indications 11 and 12 belong to the system 1 and their corresponding cams 112 and 113 establish the circuits for the magnets 111 placed on the left, whereas the indications 0 belonging to the system II and their corresponding cams 114 and 115 establish the circuits for the magnets 111 placed on the right. Cam 119 Fig. 7 permits the spring 116 to move lever 117 and thus the rack 118 towards the right in synchronism with the passage of said indications 0, 11 and 12 of the card. When the magnet 111 is energized by a circuit established by one of the indications 0, 11 or 12, the armature 120 is actuated so that spring 121 may rock pawl 122 which engages with one of the teeth 123 of the rack 118 and blocks said rack. Later on, before the card passes in front of the lower brushes 124 Fig. 5, cam 85 Fig. 7 permits spring 84 to rock sector 82 in clockwise direction, as previously described. Simultaneously cam 125 rocks levers 126 and 127 and thereby rack 118 downwards, so that the left extremity of rack 118 rocks lever 78 clockwise, thereby releasing lever 80 for the stopping of sector 82 as described. The left extremity of rack 118 is provided with steps 134, so that said rack may touch lever 78 at a moment depending of the position of rack 118 in relation to lever 122, that is at a moment depending on which tooth 123 is engaged with lever 122, that is finally depending on which of the indications 0, 11 or 12 has energized magnet 111. When the card arrives in front of the lower brushes 124, the selector 82 is thus positioned as described, and when magnet 51 is energized by the indications 9, 8 or 7 (for system I) and by one of the indications from 6 to 1 (for system II), the printing will be effected as previously described. The circuits for the magnets 51 are established by the indications of the card cooperating with the cam contacts 130 and 131 for the system I, and with the cam contacts 132, 133 for the system II, Fig. 5. The cams 130, 131 close their corresponding contacts when the indications 9, 8 and 7 pass the brushes 123, and the cams 132, 133 close their corresponding contacts when the indications 6, 5, 4, 3, 2 and 1 pass the brushes 124. The section of the printing machine shown in Fig. 7 is thus adapted to print the indications according to any of the two systems I or II. The printing of the characters 84 (system I) and 14 (system II) shown in Fig. 5 or 6 requires naturally 4 such sections or columns of the printing machine as indicated Fig. 7.

A sorting machine adapted to sort the cards according to the invention, will now be described. Several elements and details have been omitted in the figures of the sorting machine, in order to show more clearly the working of the machine.

The cards are introduced in the magazine 201 Fig. 8. On the main shaft 202 is fastened a pulley (not shown), which is driven in counterclockwise direction by a belt when a motor (not shown) is set into operation. To each extremity of shaft 202 and eccentric in relation to the center line of the shaft is fastened a pivot 203, on which pivots a connecting rod 204, connected to the picker 205. For every revolution of shaft 202, the picker 205 pushes a card through the slot 206, and between the two rollers 207, 208. To shaft 202 is fastened a toothed wheel 210 which by means of two intermediate wheels 211, 212 turns the feeding rollers 213 and 208 in counterclockwise direction. To each of said feeding rollers correspond the press rollers 214 and 207. Shaft 202 constitutes on a part of its length a feeding roller against which the press roller 216 presses. The rollers feed the card under the brush 217 and then under the chains 218—219. To shaft 202 is further fastened a toothed wheel 220 meshing with wheel 221 fastened to shaft 222, so that this latter executes half a revolution for every revolution of shaft 202. Shafts 202, 222 and rollers 208 and 213 may rotate in bearings fixed to the two sideplates 223, 224 extending all along the machine and supporting all the card receiving pockets and shaft 225 Figs. 10 and 11. To shaft 222 are fastened two chain supporting wheels 226, 227, and to shaft 225 the two wheels 230, 231. The two endless chains 218 and 219 are connected together by cross-beams 232 A—B—C, etc., each supporting 12 fingers 233, each finger may take two different positions, an operative and an inoperative position (Fig. 9). The chains are moved clockwise about shaft 222, and the cross-beams 232 are so spaced that when a card leaves the last rollers 213, 214 a cross beam is just placed behind the card. The projection 234 of the cross beam pushes then the card towards the left, guided by the guide 235 and the flaps 236 of the receiving pockets. From right to left there are 12 pockets from 0 to 9, 11 and 12 and a pocket R, Fig. 10. The brushes 217 may be displaced sideways to correspond to the column of the card according to which it is desired to effect the sorting. When a card passes under the brush, it will contact through the perforations and establish a circuit for every perforation in the column in question. In the scheme Fig. 12, a cam 240 fastened to main shaft 202 closes the contact 241 during the time when the card is under the brush, but opens the circuit when the brush is in the interval between two cards. A lever 242 closes card contact 243 when a card passes under the brush and opens the contact when there are no more cards. A commutator 244 comprises two brushes fastened to the main shaft 202. The brushes are electrically connected but insulated from the shaft. For every revolution of the main shaft, the brushes connect successively the 12 segments 245 with the common wire, according to the passage of

the index points of a column of the card under the brushes.

Each segment is electrically connected by means of a connecting plug 249 to one of the twelve sorting magnets, each magnet corresponding to a value or a perforation of the card from 0 to 9 and 11 to 12.

In the scheme Fig. 12, only the magnets belonging to system I of the card are connected. The magnets control the selection of the fingers on the crossbeams of the chain in the following way: the armature of each magnet 247 Figs. 9, 13 and 14 is connected by a connecting rod 248 to the pawl 250 pivoting on the fixed pivot 251 fastened on plate 252. The pawl is held in locking position by spring 253 fastened to plate 252. For each magnet are fixed to the plate 252 two screws 254, 255 provided with a threadless shoulder placed in the slots 256, 257 of a selector 258 so that this latter may move in a direction perpendicular to the movement of the cross-beams. To the selector 258 is fastened a pin 260 which constitute a stop for said movement. The spring 261 pulls the selector against the pawl 250. Spring 261 is at one end fastened to said pin 260 and at the other end to a pin 262 fixed to the plate 252. To the left end, in a vertical groove, the selector is provided with a winglet 263 which may pivot on a horizontal pivot 264. The winglet is held in the position shown in Fig. 8 by means of a spring 265 which at the other end is fastened to a plate 266 fastened to the selector 258. During the normal operation of the machine, the winglet never turns about its pivot 264 but would perform said movement to avoid the damage of the fingers 233 in case of accidental jamming of said winglet against said fingers. There is a selector and a winglet for every indication of a vertical column of the card. The selectors with their winglets are situated on the plate 252 in such a way that when the perforation 9 of the card is under the brush, the finger 233 indicated with 9 Fig. 9 is adjacent the first winglet (from the right hand side). When a perforation 8 is under the brush, the finger indicated with 8 is adjacent to the second winglet. The drawing illustrated Fig. 8 shows a perforation 7 of the card under the brush 217 and the finger 233 indicated with 7 adjacent to the third winglet. One single of the twelve fingers 233 is thus situated adjacent to a corresponding winglet for each perforation of the card passing under the brush. If there is a perforation 7 in the card which is under the brush 217 Fig. 9, magnet 7 is energized according to the scheme shown Fig. 12, the corresponding pawl is rocked, and the corresponding selector is released. Said selector which is the third from the right hand side is displaced as shown in Fig. 9 by its spring 261. During said displacement, the winglet pushes the finger corresponding to the perforation 7 which is just adjacent to said winglet in its operative position. For each perforation of the card which energizes a magnet, a finger 233 will thus be set in operative position.

Fig. 8 shows a card 270c under the brush which will control the positioning of the fingers on the cross beam 232c, which at this moment is under the selectors. The card 270B provided with a perforation 1 has already set in position the finger 1 on the cross beam 232B. Card 270A Figs. 8, 10 and 11 has set in position the fingers on the cross beam 232A. The card is thus pushed along the path by a cross beam which is the second following the cross beam on which the fingers have been positioned by said card.

When a cross beam has moved along the path and opened the pocket corresponding to the position of its fingers, it turns around the chain-wheels 230, 231 Fig. 10 and comes back towards the right hand side. The cross beam passes a row of fixed winglets 278 Fig. 8, which reset the fingers to their inactive positions. The selectors are reset to their initial positions once for each card, by means of a bar 280 which is pivotally connected on each end, 281 and 282 Fig. 9 to two levers 283, 284. To their left extremities, said levers pivot on two pivots 285, 286 Fig. 8 fastened to the horizontal support 287. Said support is fixed between the two side plates 223, 224. Plate 252 which carries the selector is fastened to support 287 by means of three shouldered pins 288, Fig. 9. Bar 280 is held in its inactive position by a spring 290 which holds the bar with one extremity 291 against the left extremity of lever 292. This latter pivots on the fixed vertical pivot 293 and carries on its right extremity a roller 294 which engages with the cam 295. Said cam is provided with two projections 296, 297 which rock lever 292 horizontally for every half revolution of shaft 222, that is for every cycle of the sorting machine, so that bar 280 is moved transversely in relation to the movement of the card, and pushes back all the selectors to their initial positions; in said position the selectors will be locked by the pawls 250. To this effect, the front edge 298 of the bar 280 has a toothed shape and cooperates with the pins 260.

Above each pocket, slightly on the left Fig. 10 there is a fixed axle 301—0, 301—1 etc., and an axle 302—0, 302—1 indicated by 302 on the drawings, said axle may rotate in bearings fixed to the side plates 223, 224. On the former axle, a certain number of locks 303 indicated by 303—1, 303—2 etc., on the drawings may pivot freely. These locks however cannot be displaced laterally.

In the description and in the figures, the numbers of the pieces which are repeated for each pocket are often followed by a number to indicate the pocket to which the piece belongs. Therefore the number 301—1 indicates the axle 301 for the pocket 1. Each lock 303 is arranged to cooperate and to be rocked by a determined finger when said finger is in its operative position. To enable the fingers to open a determined pocket, it is necessary that said fingers rock at the same time all the locks belonging to the code system according to which the sorting is effected.

On each of the axles 302 pivot freely two bails 305, 306, Figs. 10, 11 and 15. Bail 306 carries to each lateral extremity a boss 307—308 through which the axle 302 is passing. To bail 306 is fastened a spring 310 which to the other end is fastened to a plate 311 fixed to the frame. Said spring tries to rock the bail in counterclockwise direction, but said rocking movement is prevented by the noses 319 of those of the locks having the indications from 7 to 2. The locks themselves are held in their locking position by springs 312. The bail carries further a wing 313 to which is fastened a spring 314 which at the other extremity is fastened to the arm 315 fixed to the axle 302. Arm 315 is provided with a curvature 316 supporting a blocking screw 317 against which the wing 313 impacts when said wing takes a determined position. The other

bail 305 carries to each of its lateral extremities a boss 317, 318, through which the axle is passing. Bail 305 is placed below the bail 306, Fig. 10 and extends beyond each extremity of the bail 306, but the bails do not touch each other, even when they are rocking. To the bail 305 is fastened a spring 309 which, at the other end is fastened to the plate 311. Spring 309 tends to rock bail 305 in clockwise direction, but said rocking movement is prevented by one or a plurality of locks corresponding each to one of the fingers numbered 9, 8, 1, 0 and 11. The left edge 320 of bail 305 is provided with a notch on the part which extends below the bail 306 so that the bail 305 can never engage with the locks corresponding to the values from 7 to 2, but only cooperate with the locks which correspond to one of the values 9, 8, 1, 0 and 11. The two adjusting rings 321 and 322 fastened to the axle 302 insure the lateral position of the bail 305. Said bail 305 carries a wing 326 provided with a spring 327 fastened at the other end to arm 328 fastened to shaft 302. Arm 328 has a curvature 330 provided with an adjusting screw 331 which presses against wing 326.

To shaft 302 is fastened a lever 333 Fig. 10 which is pivotally connected to a rod 334 which at the other end is pivotally connected to the arm 335. Said arm is fastened to the axle 336 which may pivot in bearings fixed on the side plates 223, 224. The arms 337 are fastened to the axle 336 and constitute the flap for the pocket. All the other pockets comprise the same mechanism as above described. The locks which vary in quantity and position according to the code, constitute the only difference between the different pockets. The mechanical device is however the same for the sorting according to the two code systems or for the sorting of normal card with single perforations. The plug connection 249 Fig. 12 may change for the different systems.

Assume now that the sorting is effected according to system I, and that connections 249 are made for the figures 8, 9, 10, and 11. The card 270A is shown in Fig. 8 in the position it will take later on. It is provided with a perforation 1 which causes the energization of magnet 1 when the perforation 1 of the card passes under the brush 217, Fig. 8. At this moment the finger 1 of the cross-beam 232 is placed below the selectors, adjacent to that one of the winglets 263 which represents the value 1. When selector 1 is moved by its spring 253 as a result of the energization of magnet 1 (247), the finger 233 numbered 1 on the cross beam 232 A will be thus pushed by the corresponding winglet 263 in its operative position Figs. 8, 10 and 9. The cross beam 232A moves to the left and reaches first the lock for the first pocket which is the pocket 0 indicated on the right in the Figs. 10 and 11. Bail 305—0 belonging to the mechanism of said pocket 0, is locked by a lock 0 which may be rocked by a finger 0 in active position, by a lock 9 which may be rocked by a finger 9 in inactive position, and by a lock 8 which may be rocked by a finger 8 in inactive position. For the presumed case, the fingers 9 and 8 which are in their inactive position rock therefor the locks 9 and 8 but the bail 305—0 is continuously locked by the lock 0, which will not be rocked because finger 0 is in its inactive position and passes adjacent to the lock 0. Therefore the bail 305—0 will not rock. Bail 306 is locked by the two locks 7 and 2 which are positioned to be rocked in their active position, by the fingers 7 and 2 respectively. As both these fingers are in their inactive position, they pass adjacent to the locks and bail 306—0 remains motionless. Therefore pocket 0 is not opened. The cross beam continues to advance and reaches the locks of pocket 1; said position is illustrated in the Figures 10 and 11. Bail 305—1 belonging to said pocket is locked by the two locks 9 and 8 which are in position to be rocked by the fingers 9 and 8 in inoperative position, and by the lock 1 positioned to be rocked in operative position by finger 1. As fingers 9 and 8 are in their inactive position, they will rock the two locks 9 and 8. At this same moment, fingers 1 in operative position will rock the lock 1. The bail 305—1 is therefore entirely unlocked and spring 309 will rock the bail 305—1 in clockwise direction as shown in Figs. 10 and 11. The two locks belonging to the system 2 which lock the bail 306 will not be rocked. Figs. 10 and 11 show fingers 7 to 2 in their inactive position passing adjacent to said locks. By the unlocking of bail 305, its wing 326 presses against the screw 331 and rocks the arm 328 Figs. 15, 10 and 11 and thus axle 302 in counterclockwise direction. Lever 333 fastened to axle 302 rocks therefore lever 335 and turns axle 336 by means of the rod 334, so that the flap 337 of the pocket 1, opens as illustrated in Fig. 10. The card 270A which has caused the selection of the fingers on the cross beam 232A, is placed at this moment exactly in front of the pocket 1, and will be pushed into the pocket by the cross beam 232C. After the pocket has remained opened during nearly a cycle of the machine, and after the card is entirely introduced in the pocket, said pocket will be closed by cam 340 cooperating with an arm 341 of lever 333 which rocks this latter and turns the axle 302 in counterclockwise direction, so that the bail 305 resume its initial position locked by the locks 1, 8 and 9. Simultaneously, the flap 337 will be restored to its initial position as indicated for the pocket 0, Fig. 10. Cam 340 is fastened to a shaft 342 which extends along the machine, making one revolution for each cycle, drivn by shaft 222 by means of a bevel-gear (not shown).

Assume that the sorting is effected according to the second system, and according to a column with the perforations 7 and 3 indicating the value 1. The card should thus be sorted into the same pocket 1. The connections 249 shown in Fig. 12 are withdrawn and the magnets 7 to 2 are connected. When the card which is supposed to be the card 270A passes the brush 217, magnets 3 and 7 will be energized by the circuits established by the perforations 3 and 7; the fingers 3 and 7 will be set in working position, on the cross beam 232 which, at this moment is placed below the selectors 253. When the cross-beam 232A later on passes below the locks 320 of the pocket 0, the lock 7 will be rocked, but not the lock 2, because this latter is placed on the path of a finger 2 set in working position, whereas finger 2 is placed in inoperative position. The bail 306—0 therefore will not rock. The bail 305—0 will not rock either, because the lock 0 is placed in the path of a finger 0 in operative position while said finger is in its inoperative position.

When the cross-beam arrives below the locks of pocket 1, locks 3 and 7 are rocked by the fingers 3 and 7 in operative position, bail 306—1

rocks; pocket 1 is opened as described, and the card will be introduced into the pocket.

In case the sorting is effected for normal cards with a single perforation in the column in question, all the magnets will be connected by the connections **249**, Fig. 12. It is evident that for two cards having respectively the perforations 0 and 1, the conditions will be exactly the same as above described, and the pockets 0 and 1 will be opened. For example, if the sorting takes place according to the system 1 or according to the normal system, and if the perforation 0 appears on the card, fingers 8 and 9 will be in inoperative position and finger 0 in operative position. Said fingers will be placed therefore in the path of the locks 9, 8 and 0 of the pocket 0 Fig. 11, bail **305** will rock and the pocket will open itself.

The locks **303** will be for each pocket and for each system, that is for each bail **305—306**, once for all arranged to correspond to a position of fingers determined by the perforations of the card. The sorting may thus take place either according to system I, to system II or to the normal system. It is evident that the sorting may take place according to the three systems simultaneously. When a cross beam reaches the first pocket for which the arrangement of locks corresponds to the arrangement of the fingers on the cross beam, the pocket will be opened for the card in question. The position of the locks for the different pockets is as follows for the case described:

Pocket	Lock in position to cooperate with a finger in inoperative position		Lock in position to cooperate with a finger in operative position	
	System I	System II	System I	System II
0	8	9	0	7, 2
1	8	9	1	7, 3
2			11	2
3			1	3
4		7	8, 0	4
5		7	9, 1	5
6		7	9, 0	6
7		6, 5, 4	9, 11	7
8			8	7, 4
9			9	7, 5
11			11	7, 6
12			12	

GEORGES VIEILLARD.

PUBLISHED MAY 25, 1943. BY A. P. C.

G. VIEILLARD

RECORD CARD FOR CARD CONTROLLED MACHINES

Filed Feb. 28, 1940

Serial No. 321,161

9 Sheets-Sheet 1

Fig. 3

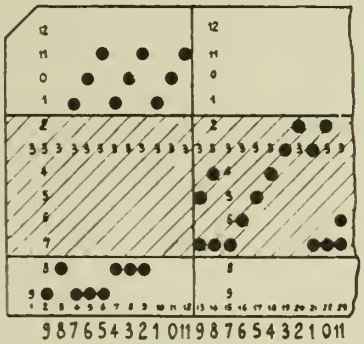

Fig. 4

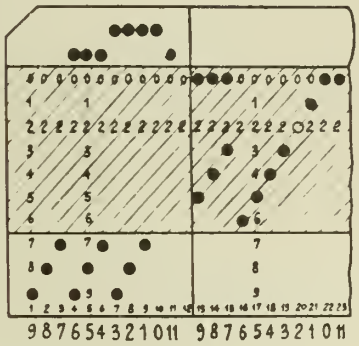

Fig. 1

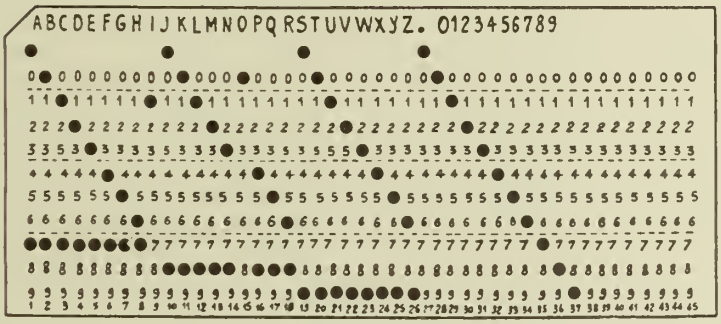

Fig. 2

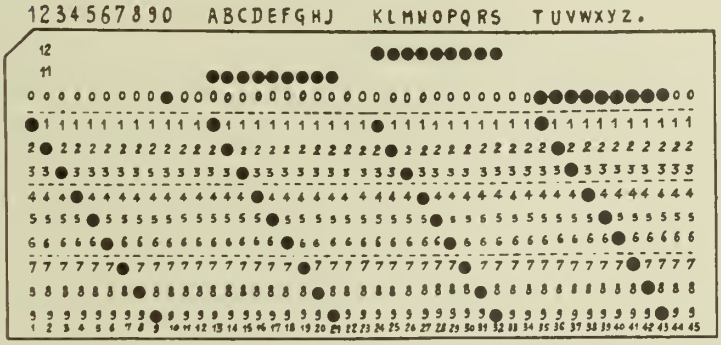

INVENTOR:
GEORGES VIEILLARD
BY Haseltine, Lake & Co.
ATTORNEYS

PUBLISHED MAY 25, 1943. BY A. P. C.

G. VIEILLARD

RECORD CARD FOR CARD CONTROLLED MACHINES

Filed Feb. 28, 1940

Serial No. 321,161

9 Sheets-Sheet 2

Fig. 5

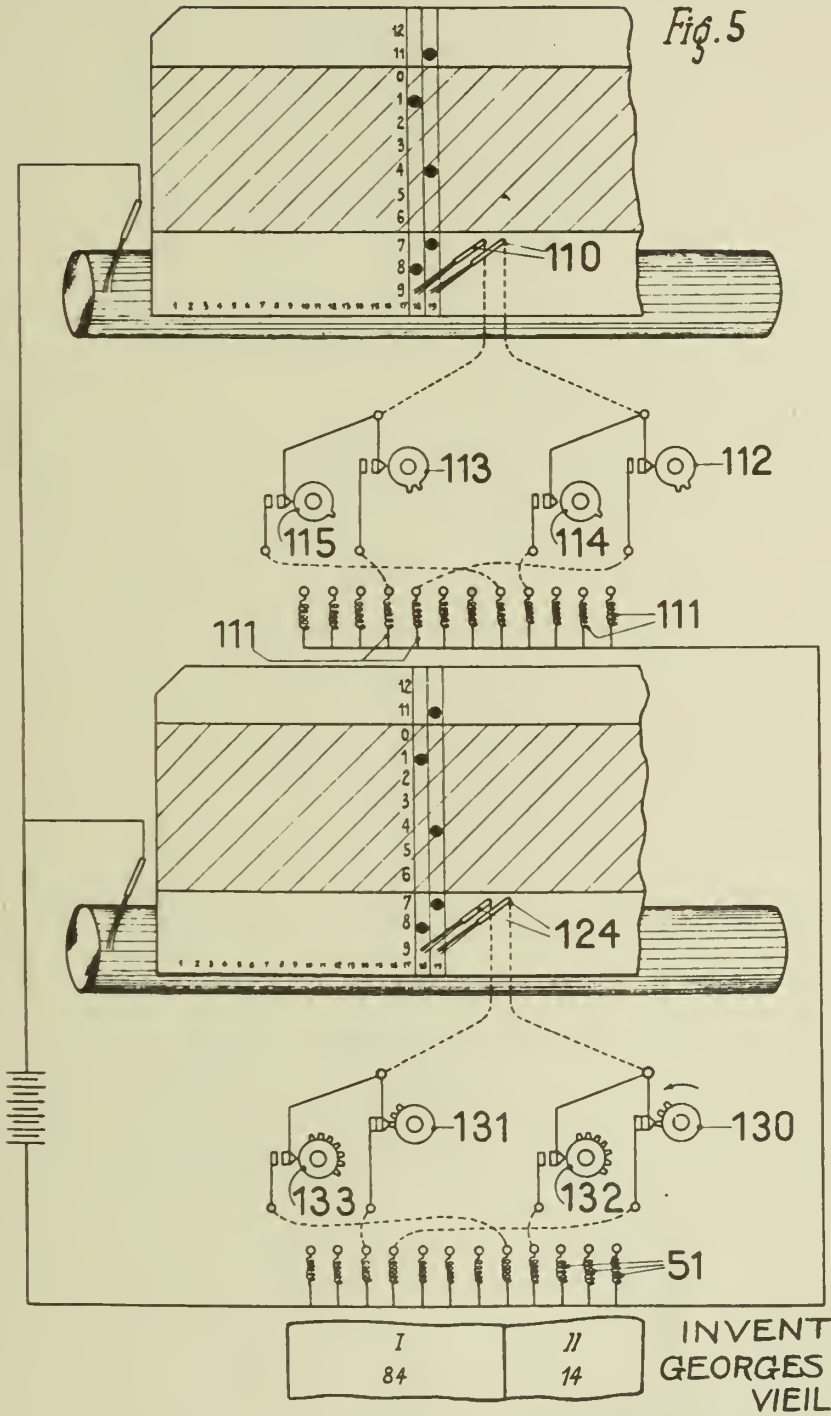

INVENTOR:
GEORGES VIEILLARD
BY Haseltine, Lake & Co.
ATTORNEYS

PUBLISHED
MAY 25, 1943.
BY A. P. C.

G. VIEILLARD

RECORD CARD FOR CARD CONTROLLED MACHINES

Filed Feb. 28, 1940

Serial No.
321,161
9 Sheets-Sheet 3

Fig. 6

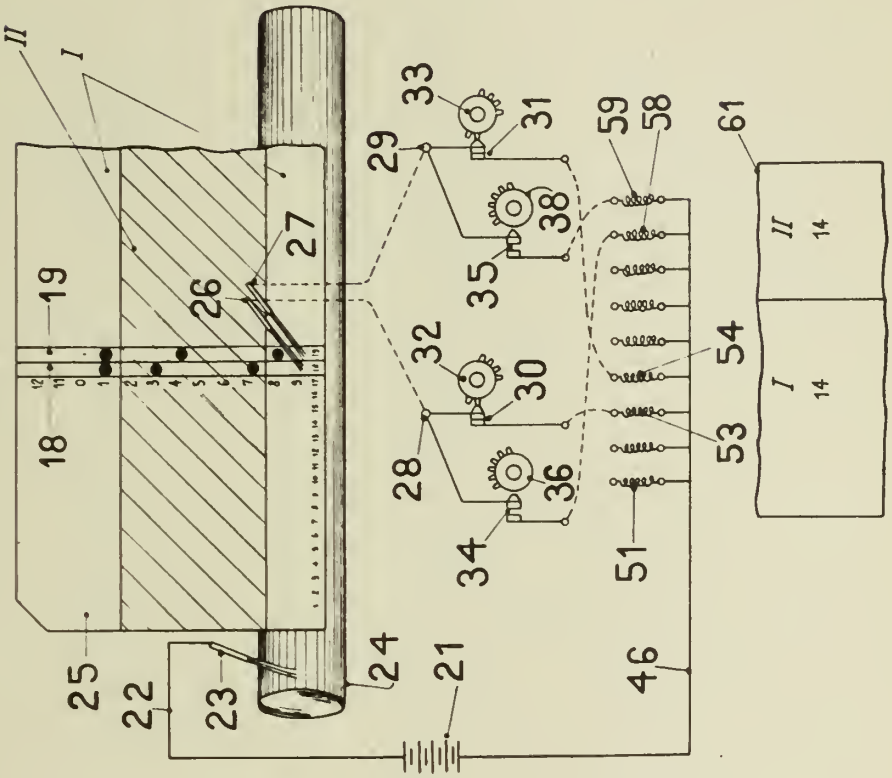

Fig. 15

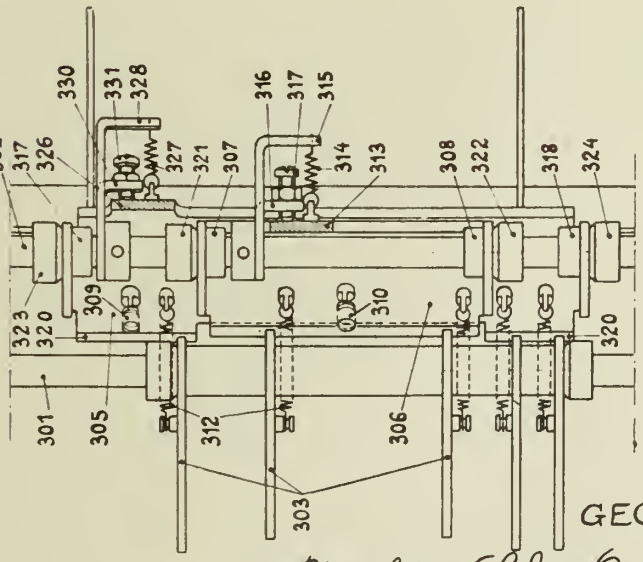

INVENTOR:
GEORGES
VIEILLARD
BY Haseltine, Lake & Co., ATTORNEYS

PUBLISHED
MAY 25, 1943.
BY A. P. C.

G. VIEILLARD

RECORD CARD FOR CARD CONTROLLED MACHINES

Filed Feb. 28, 1940

Serial No.
321,161

9 Sheets-Sheet 4

Fig. 7

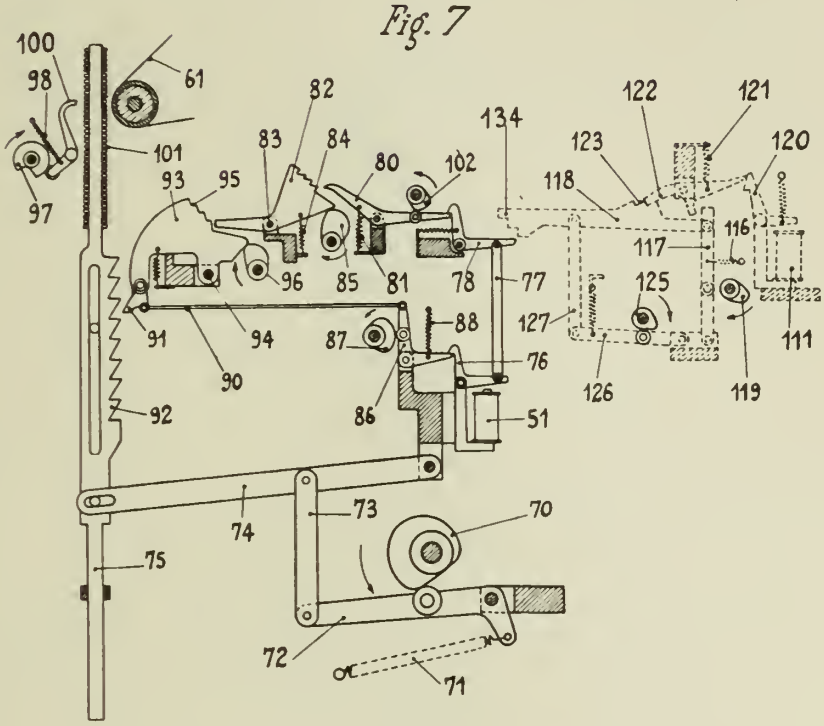

Fig. 12

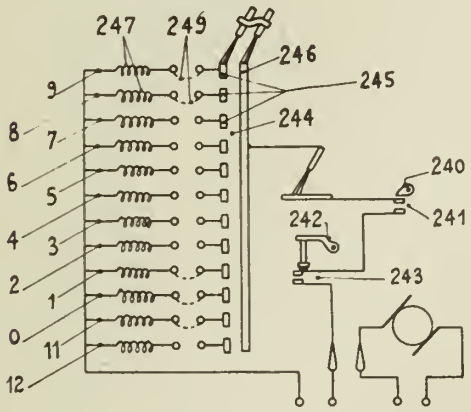

INVENTOR:
GEORGES VIEILLARD
BY Haseltine, Lake & Co.
ATTORNEYS

PUBLISHED
MAY 25, 1943.
BY A. P. C.

G. VIEILLARD

RECORD CARD FOR CARD CONTROLLED MACHINES

Filed Feb. 28, 1940

Serial No.
321,161

9 Sheets-Sheet 5

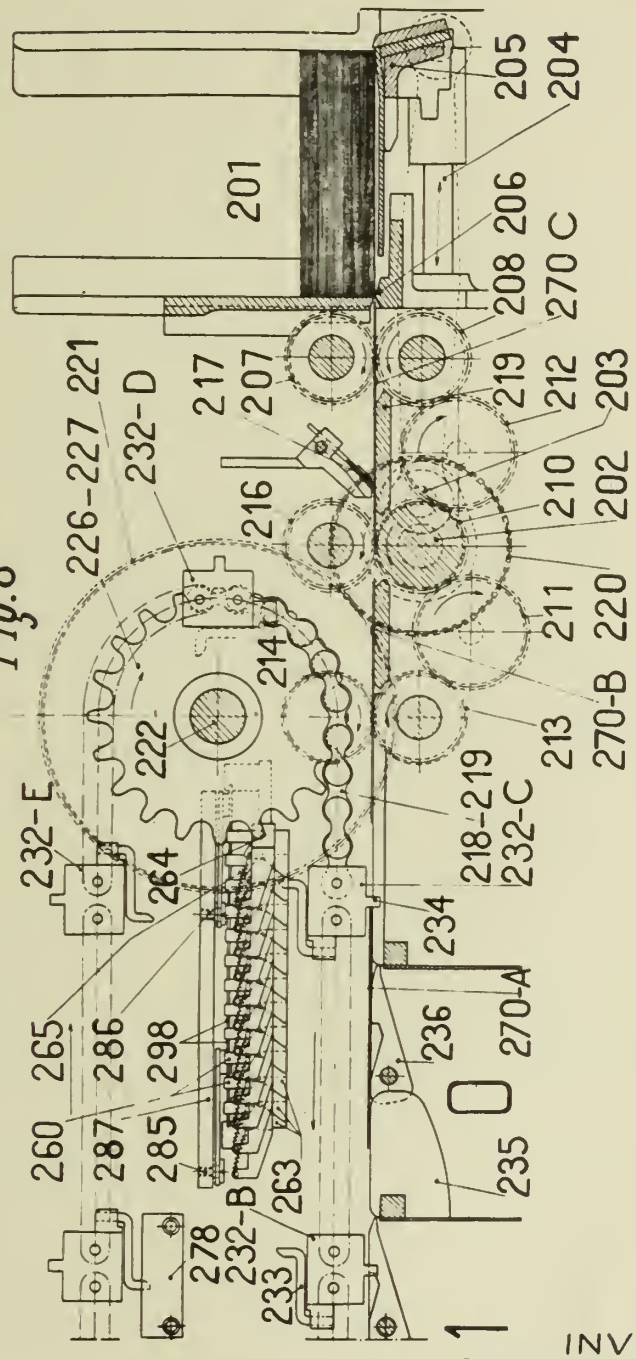

INVENTOR:
GEORGES VIEILLARD
BY Haseltine, Lake & Co.
ATTORNEYS

PUBLISHED
MAY 25, 1943.
BY A. P. C.

G. VIEILLARD
RECORD CARD FOR CARD CONTROLLED MACHINES
Filed Feb. 28, 1940

Serial No.
321,161
9 Sheets-Sheet 6

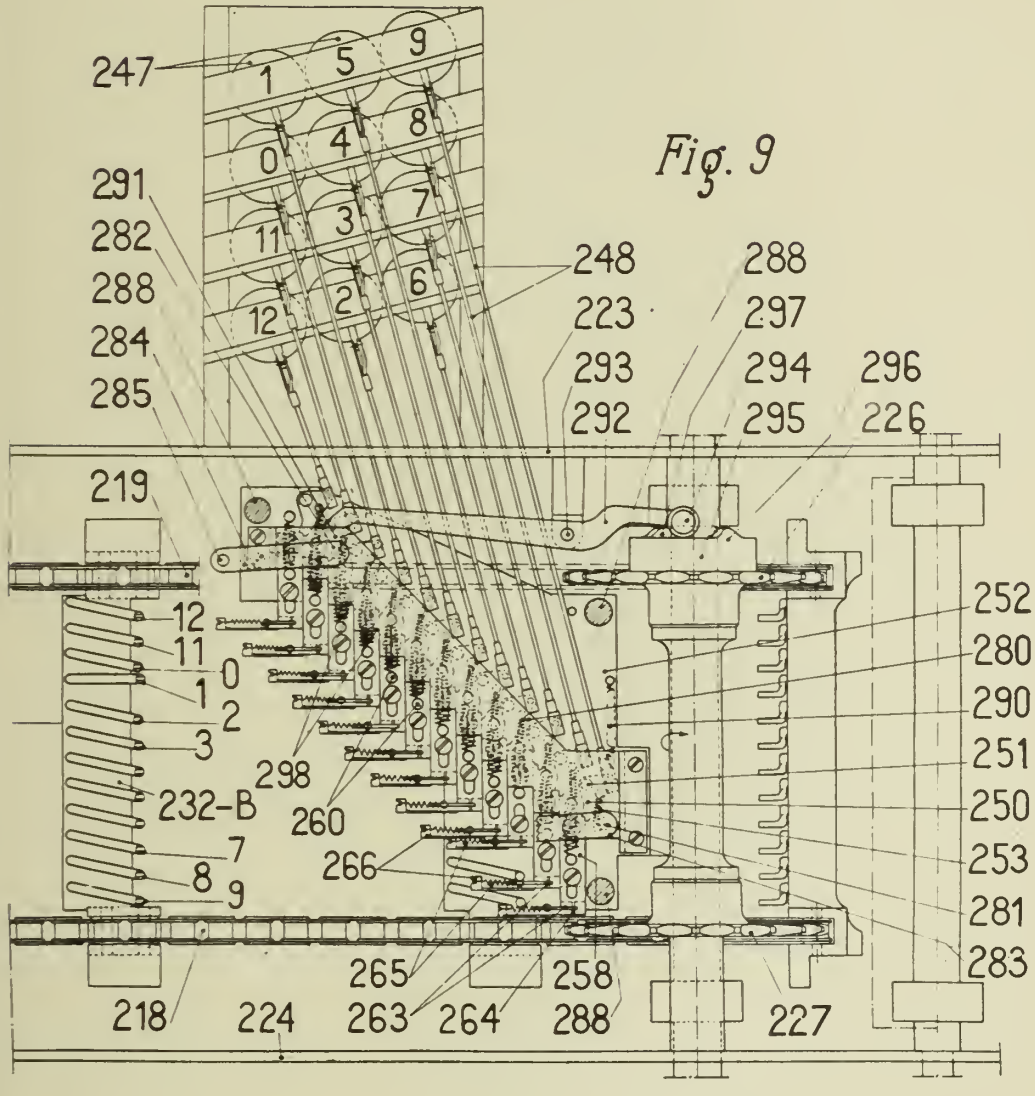

INVENTOR:
GEORGES VIEILLARD
BY Haseltine, Lake & Co
ATTORNEYS

PUBLISHED
MAY 25, 1943.
BY A. P. C.

G. VIEILLARD

RECORD CARD FOR CARD CONTROLLED MACHINES

Filed Feb. 28, 1940

Serial No.
321,161
9 Sheets-Sheet 7

Fig. 10

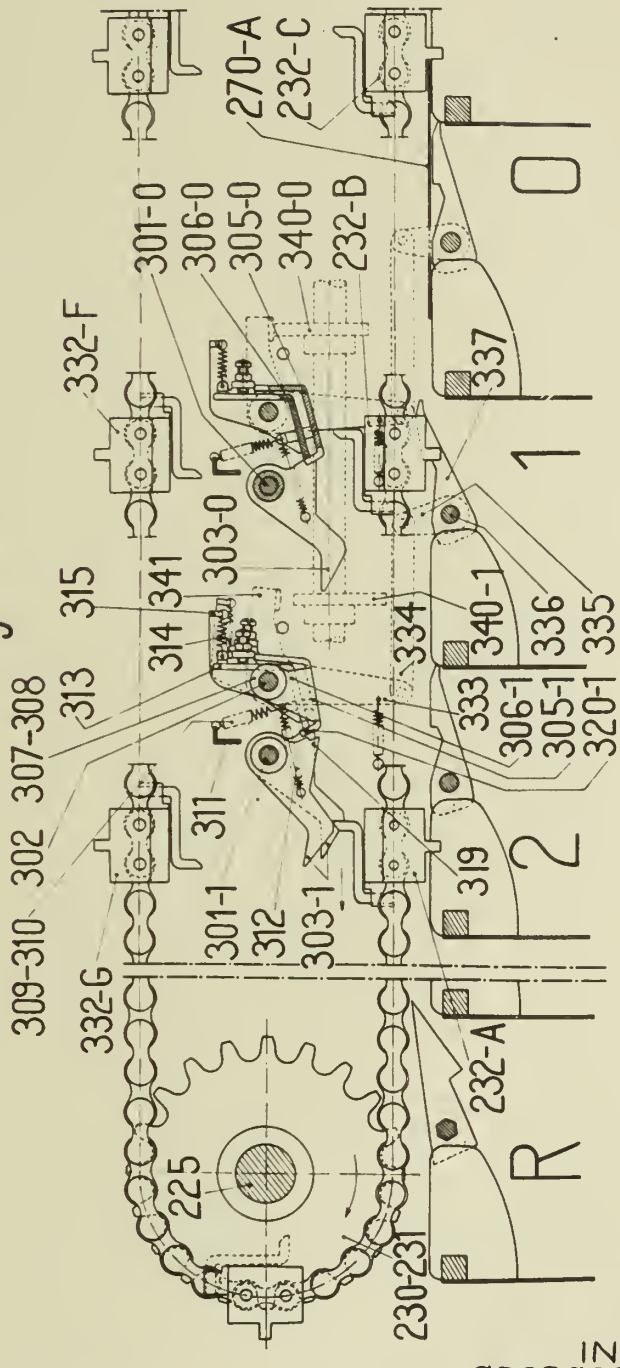

INVENTOR:
GEORGES VIEILLARD
BY Haseltine, Lake & Co.
ATTORNEYS

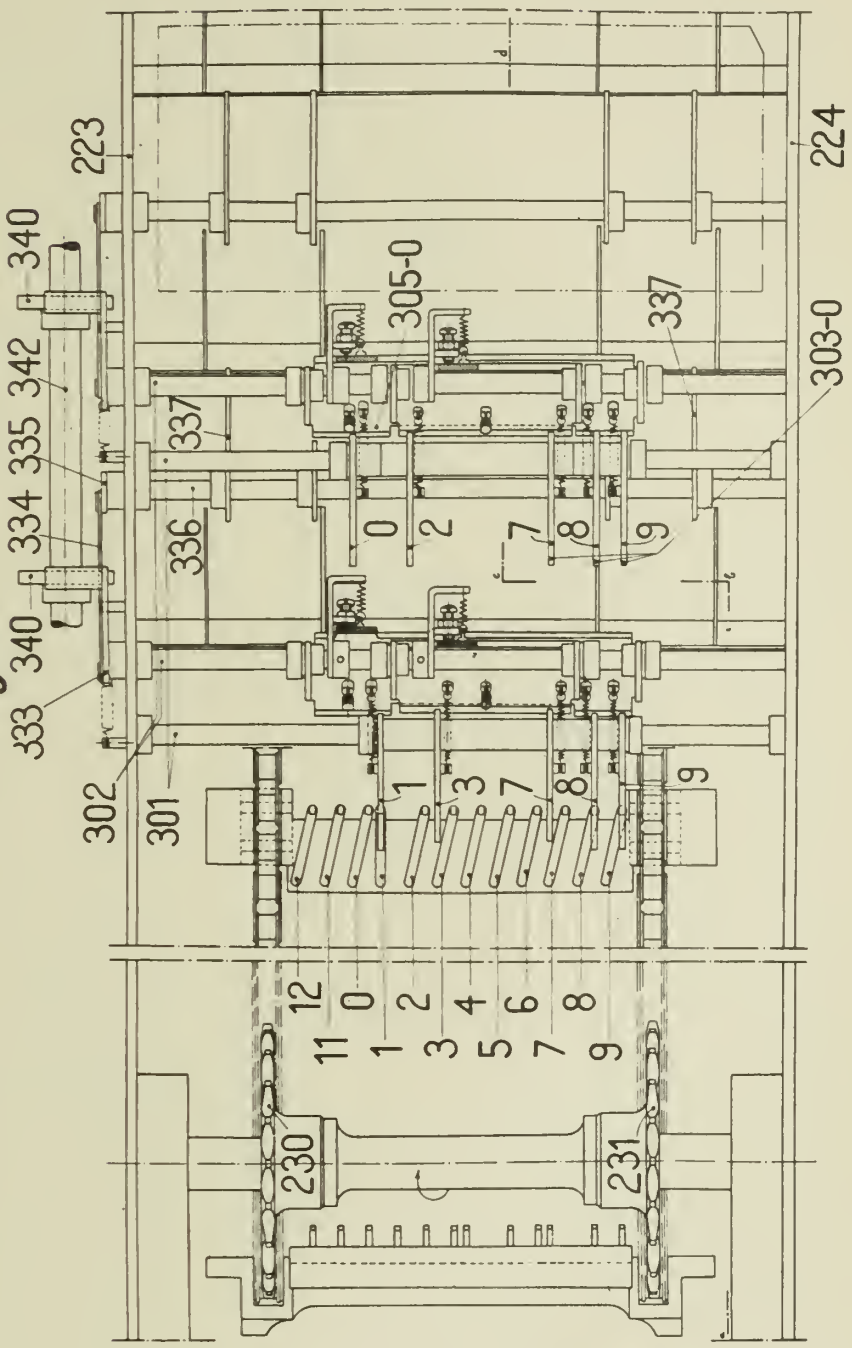

Fig. 11

INVENTOR:
GEORGES VIEILLARD
BY Haseltine, Lake & Co.
ATTORNEYS

Fig. 13

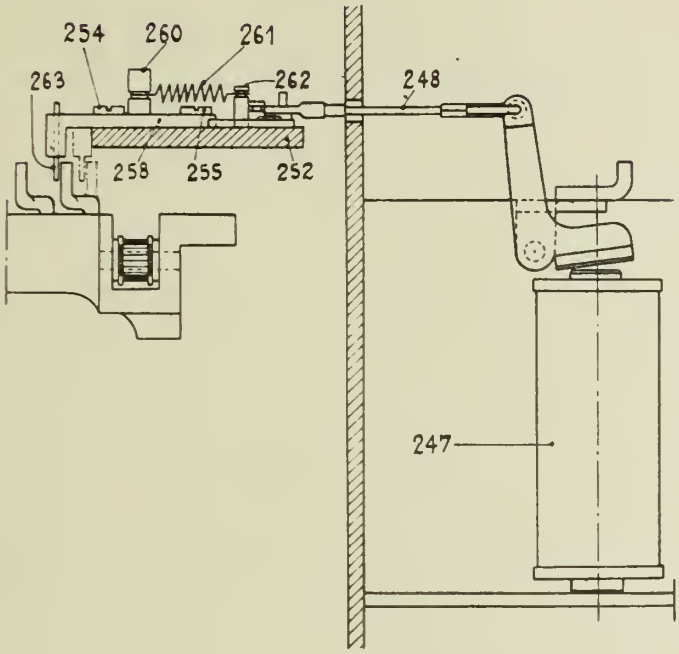

Fig. 14

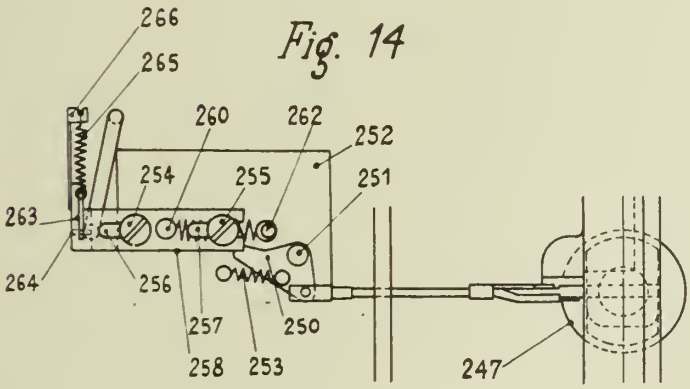

INVENTOR:
GEORGES VIEILLARD
BY Haseltine, Lake & Co.
ATTORNEYS

Published May 25, 1943

Serial No. 321,239

ALIEN PROPERTY CUSTODIAN

ELECTRONIC MICROSCOPE

Ernst Ruska and Hans Schuchmann, Berlin-Spandau, Helmut Ruska, Berlin-Nikolassee, and Heinz Otto Müller, Berlin-Spandau, Germany; vested in the Alien Property Custodian

Application filed February 28, 1940

This invention relates to improvements in electronic microscopes, and more particularly to a support therefor designed in the form of a hollow body.

To operate electronic microscopes a large number of individual parts, such as, for instance, a vacuum pump with a cooling trap, a vacuum testing device and various electric control apparatus are required. These individual parts of the electronic microscope have hitherto been separately mounted.

The object of the present invention is to simplify the total construction of an electronic microscope in such a manner as to facilitate the operation and control thereof. To this end, a hollow body in which are arranged the individual parts required for the operation of the microscope serves according to the invention as a support for the electronic microscope. Consequently, the hollow body is preferably so designed that the vacuum pump, the vacuum testing apparatus, the cooling trap and their accessories as well as the electric control devices are mounted in the hollow body itself. If arrangements in which vertical electronic microscopes are employed, the hollow body serving as a support for the microscope is preferably provided with a horizontal bearing surface for the lower part of the electronic microscope. In this case it is advisable to place the switch box for the reception of the electric control devices beneath this bearing surface, since these electric control devices necessary for operating the microscope may thus be arranged as close as possible to the place of the observer. On a part of the hollow body placed behind the electronic microscope are secured according to the invention the high-voltage parts of the microscope enclosed in a ground tank. In this part of the hollow body serving as a support for the microscope, may be arranged a preliminary vacuum tank cooperating with the vacuum pump. To prevent vibrations of the electronic microscope caused during the operation by the vacuum pump, the latter is not firmly secured to the hollow body of the electronic microscope. To this end, the rear wall of the hollow body may easily be removed and the separate support for the pump, arranged on the foundation, may be inserted through the opening which thus results. The cooling trap allotted to the vacuum pump and the corresponding cooling agent tank are also arranged according to the invention in the hollow body serving as a support for the electronic microscope. To facilitate the replacement of the cooling agent for the cooling trap, the cooling agent tank may be so arranged that it may be moved by means of a mechanic drive in the upward and downward direction inside the hollow body.

The electronic microscopes consist, as a rule, of a considerable number of individual parts which, for instance, carry the electron emitting source, the condenser coil, the part enclosing the object to be magnified, the magnifying lenses and the like. The individual parts are so assembled as to form a pressure-tight tank which is connected to a vacuum pump during the operation of the microscope. It is occasionally necessary in such apparatus to control individual parts of the microscope or to remove the same and replace them by new ones.

To this end, a device is employed according to the invention which permits after the disengagement of two parts of the electronic microscope a rotation of a part in a direction perpendicular to the axis of the electronic microscope. The rotary device is secured to the hollow body serving as a support for the microscope. By rotating one part of the electronic microscope it is easily possible to control the interior of the microscope. It is also thus possible by suitably selecting the point at which the electronic microscope is subdivided with the aid of the rotary device to remove certain individual parts of the microscope without interfering with the other parts of the microscope. In such electronic microscopes whose individual parts are assembled with the aid of sealing cones or rubber rings provided with cap screws to form a vacuum-tight tank the rotary device is preferably so designed as to permit both a rotation and an axial displacement of the two parts of the electronic microscope to be brought out of engagement with each other. The electronic microscope may be subdivided into two parts with the aid of the novel rotary device, for instance, by disengaging the sealing cones at a certain point, in which case one part is first moved in the upward and axial direction with the aid of the rotary device away from the other part to such an extent that the relatively long sealing cones no longer interfere with the rotation.

The rotary device secured to the hollow body serving as a support for the microscope cooperates with the upper part of the microscope. Consequently, when dissembling the microscope, the lower part remains then firmly secured to the foundation for the hollow body, whereas the upper part of the microscope moves as described above first in the upward direction as a result of the axial movement and is then rotated, thereby rendering it accessible for inspection. The ro-

tary device may be designed in various ways. A particularly simple arrangement is obtained, for instance, by providing the rotary device with a spindle drive to be adjusted by a hand wheel or the like and secured to the hollow body serving as a support for the microscope. With the aid of this spindle drive, the upper part of the microscope may be moved in the axial direction away from the lower part by means of a swivel arm; after which the rotation may be carried out by hand without employing special auxiliary means. The casing protecting the high-voltage parts of the electronic microscope may be assembled with the rotary device itself. In this case it is preferable to apply the current supply conductor to such a point as to cause it to move as little as possible during the rotation described above. A particularly favorable attachment of the current supply conductors is obtained if the conductors at the point of attachment lie coaxially with respect to the axis of the spindle.

In the accompanying drawing is shown as an embodiment a vertical sectional view of a vertical electronic microscope in diagrammatic form. Referring to the drawing, 1 denotes the electron emitting source. 2 the condenser coil. The electron stream passes through the part 3 enclosing the object to be magnified, through the objective lens 4, a part 5 provided with inspection windows for observing the intermediate image, and then through the projection lens 6 to the lower part 7 for the reception of the main inspection windows and the fluorescent screen or the photographic plate. As a support for the electronic microscope serves a hollow body consisting of the two parts 8 and 9. These two parts are firmly held together in the manner shown by screws 10. The part 9 is secured to the lower part 7 of the electronic microscope by screws. 11 denotes a ground tank enclosing the high-voltage parts of the electronic microscope. In this ground tank is arranged the battery casing 12 to which the current supply conductors 13 are connected. The conductor 14 leads from the battery casing 12 to the electron emitting source 1. The battery casing is secured to an insulating body 15 attached to a holder 16 by means of screws 17. The holder 16 forms together with the swivel arm 18 the device for axially displacing and rotating the upper part of the electronic microscope. To this end, the hub 18 of the swivel arm is provided with an internal thread cooperating with a spindle 19 having a corresponding thread. The spindle is driven by means of the worm gear 25, 26. The worm wheel 26 is rotated by a hand wheel 27 secured exteriorly of the hollow body serving as a support for the microscope. The spindle bears through a ball collar thrust-bearing 24 against a holder 28. The swivel arm 18 is secured to the holder 20 by means of screws, the holder being provided at its outer end with a bore in which fits the part 5 of the electronic microscope. With the aid of the lifting and rotating device shown, the upper part of the electronic microscope containing the electron emitting source, the condenser coil, the objective enclosing the object to be magnified and the objective coil may be separated from the lower part. The two sealing cones 22 and 23 of the parts 4 and 5 may be brought out of engagement with each other. To this end, the nut 21 is turned in the downward direction so that it presses against the upper end of the sealing cone 22, thereby bringing the cones out of engagement. As soon as the cones have been disengaged by the nut 21, the swivel arm 18, 20 is displaced in the upward direction by rotating the hand wheel 27. During this rotation the entire upper part of the electronic microscope is separated from the lower part in the axial direction. As soon as the upper part of the electronic microscope has been displaced in the axial direction to such an extent that the lower end of the cone 23 lies above the upper end of the cone 22 (a further movement of the lifting device in the axial direction being prevented by a stop) the upper part of the electronic microscope may be rotated from its normal operating position perpendicularly to the axis. In the arrangement shown also the holder 16, the ground tank 11 and the high-voltage parts contained therein are axially displaced.

The hollow body 8, 9 serving as a support for the microscope is also employed for the reception of the additional devices necessary for the operation of the microscope. Thus, for instance, at the upper end of the part 9 of the hollow body lying in the immediate neighborhood of the seat of the observer is arranged a switch box 31 for the reception of the electric control devices required for the operation of the electronic microscope. The part 9 is provided with a foot 32 and the part 8 of the hollow body with two feet 33. When the rear wall 51 of the part 8 is removed, the vacuum pump 35 is placed in the hollow body and is secured to a separate support 36, the heat (Bunsen burner) being supplied to the pump 35 through the openings 38 and 39 of the support 36 and the rear wall 51. The waste gas of the burner leaves the heating chamber 52 through the passage 37. 40 designates the preliminary vacuum tank arranged in the upper part of the hollow body serving as a support for the electronic microscope. In the suction conduit 41 of the pump is arranged a cooling trap 42. The cooling tank cooperating with the cooling trap 42 is designated by the reference numeral 43. The suction conduit is secured to the lower part 7 of the electronic microscope with the aid of the conduit connection 44. In order to enable an easy replacement of the cooling agent of the cooling trap 42 contained in the tank 43, the latter is placed on a plate 45 which may be moved in the upward and downward direction by means of a rack and pin drive 46, 47. 48 denotes a lateral opening provided in the part 8 of the hollow body. During the operation of the microscope the cooling tank 43 is raised by means of the hand wheel 49 through the rack and pin drive 46, 47 till the cooling trap 42 immerses in the cooling agent. 50 denotes a vacuum testing device connected to the suction conduit.

ERNST RUSKA.
HANS SCHUCHMANN.
HELMUT RUSKA.
HEINZ OTTO MÜLLER.

PUBLISHED

MAY 25, 1943.

BY A. P. C.

E. RUSKA ET AL

ELECTRONIC MICROSCOPE

Filed Feb. 28, 1940

Serial No.
321,239

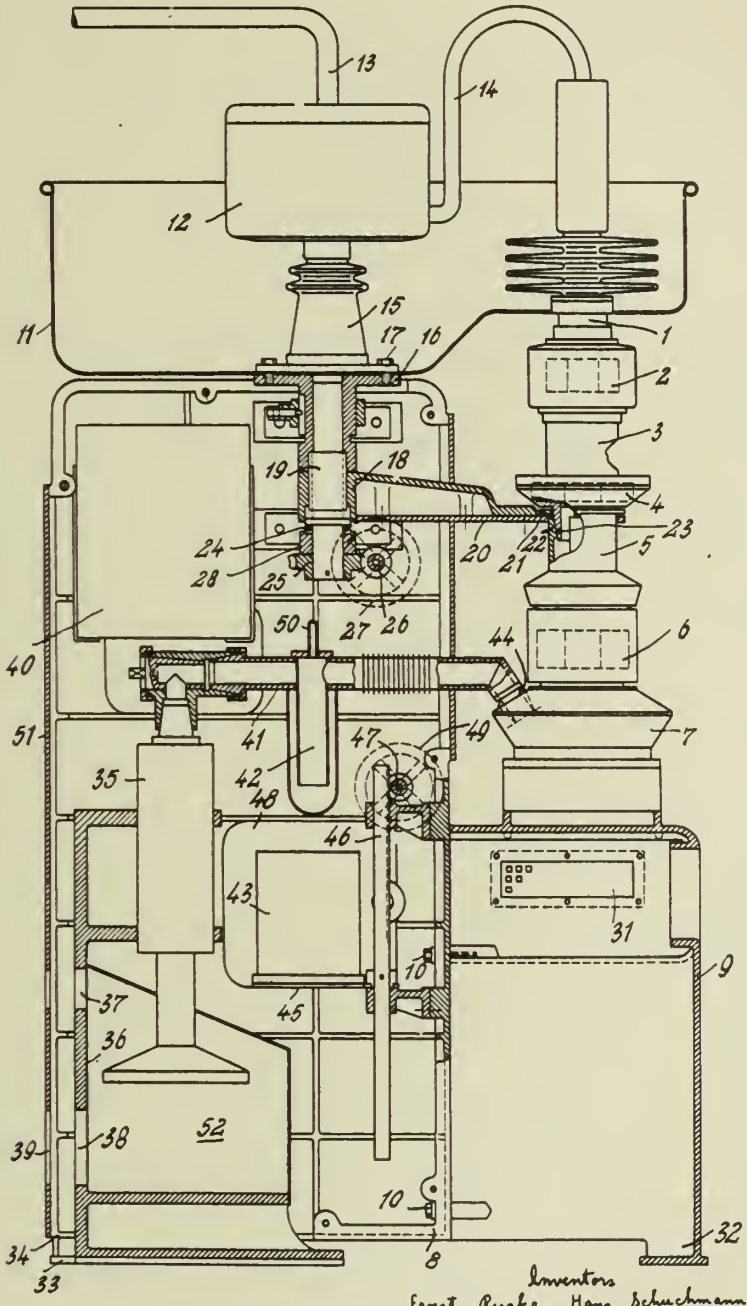

Inventors
Ernst Ruska, Hans Schuchmann,
Helmut Ruska and Heinz Otto Müller
by Knight Bros Attorneys

Published May 25, 1943

Serial No. 321,769

ALIEN PROPERTY CUSTODIAN

JET-PIPE RELAY

Paul Peglau, Berlin-Steglitz, Germany; vested in the Alien Property Custodian

Application filed March 1, 1940

This invention relates to a jet-pipe relay and deals with the following problem:

As is well known, a jet-pipe relay comprises a jet-pipe supplied with a pressure medium, as for instance compressed air, oil, or the like. The jet-pipe has to be swingably mounted so as to deflect in response to any change of the controlling impulses acting upon the pipe. Obviously, the sensitivity of such a jet-pipe relay is the better, the smaller the friction to be overcome upon any deflection of the pipe. Usually, the pressure medium supply conduit leads to a fixed stationary connecting piece relative to which the jet-pipe is to be moved. Of course it is desirable to provide an adequate packing or gasket means between the fixed connecting piece and the input end of the jet-pipe. The usual packing means are inadequate as they unduly increase the friction with the result that the sensitivity of the jet-pipe relay suffers considerably.

This gives rise to difficulties inasmuch as on the one hand the friction should be kept as small as possible and on the other hand the loss of pressure medium should be reduced as far as possible by improving the packing means hitherto used.

The invention aims at overcoming these difficulties by the provision of a packing body which does not unduly increase the friction and which prevents the jet-pipe relay from leaking.

A further object of my invention is to provide packing means which prevent leakage not only in the middle or zero position but likewise in all position deviations therefrom. In this connection it is to be noted that according to the invention means are provided for adjusting the effective packing body position relative to the (imaginary) axis of the jet-pipe deflection.

Further aims and objects of my invention will be readily understood from the following description of an embodiment shown of the drawing, in which

Fig. 1 is a perspective view of the jet-pipe relay showing the packing means in a vertical cross-section;

Fig. 2 is a perspective view in a greater scale of the packing body, partly in section;

Fig. 3 is a perspective view in a greater scale of the above mentioned adjusting means partly in section;

Fig. 4 represents in a greater scale the input end of the jet-pipe provided with a cup-like casing for receiving the packing body.

Referring now to the drawing, the jet-pipe 1 is supplied in well known manner with any convenient pressure medium delivered by a supply conduit 2 which in the embodiment shown may communicate either with a bore 3 or a channel 4, both provided in a stationary block 5. The supply conduit 2 communicating with any suitable pressure source (not shown) is connected to said block 5 supporting the jet-pipe 1 by means of two leaf springs 6 arranged to allow the pipe to be deflected around an axis x—x. This provides a practically frictionless bearing for the jet-pipe and said leaf springs furthermore act so as to exert a restoring action on the jet-pipe, so that any further spring means or the like for the restoring action may be dispensed with. In the embodiment shown said leaf springs are fastened at one end to the stationary block 5, e. g. by means of balls 7 and 8, respectively, and at the other end to the jet-pipe 1. To this end the pipe 1 is provided with two lateral arms 9, 10 having a screw threaded bore 11, 12, respectively, for clamping the lower spring end onto said arms by means of balls 13 and 14.

The bore 3 and the channel 4 communicate with the jet-pipe input end so that the pressure fluid coming from the pressure source enters the jet-pipe 1 and passes its discharge nozzle 1′, thereby producing a jet which cooperates with two receiving nozzles 15 and 16. Each of these nozzles communicates with two conduits 17 and 18, respectively, leading to a device to be operated in response to any controlling impulse action upon the jet-pipe 1 so as to displace it around the axis x—x. Thus the conduits 17 and 18 may communicate with the opposite ends of a servomotor cylinder.

As is well known from the "Askania jet-pipe relay" the pressure in the receiving nozzle 15 is equal the pressure in the nozzle 16 provided that the jet-pipe 1 is in its middle or zero position, in which the discharge nozzle 1′ is situated exactly in the middle between said two receiving nozzles. As soon as however the controlling impulse causes the jet-pipe 1 to leave its zero or middle position due to a displacement around the axis x—x in one or opposite direction the pressure fluid will flow from the discharge nozzle 1′ in a different degree into said nozzles 15, 16, thereby producing a pressure difference adapted to operate the servo-motor in dependence on the direction and the value of the controlling impulse.

According to my invention, a packing body 19 is arranged between the stationary block 5 and the input end of the jet-pipe 1. This packing body is easily movable in the direction of the jet-pipe axis and comprises according to Fig. 2

two balls **19***a*, **19***b* of different diameter connected with each other so as to jointly form one body. As may be seen from Fig. 3, this body is provided with a channel **20** for passing the pressure medium from the conduit **2** to the jet-pipe **1**. The upper part **19***b* of smaller diameter faces the block **5**, whilst the lower part **19***a* of greater diameter faces the jet-pipe **1**, so that the pressure of the pressure medium exerts a reactionary force upwardly on to the packing body so as to force it on to the block **5**. The larger part **19***a* fits with small play in a cup **21** arranged at the input end of the jet-pipe **1**. In the case of a hydraulical relay supplied with a pressure liquid, the small play between the packing body and the cup **21** is adapted to form a thin liquid film reducing the friction as well as having an additional tightening effect.

The cup **21** has a cylindrical bore as will best be seen from Fig. 4, so that the packing body supported by the block **5** may be adjusted in the direction of the jet-pipe axis relative thereto in such a manner that the freedom of the jet-pipe movement is not interferred with. In this respect the best operation is ensured if the centre of the greater ball **19***a* lies in the imaginary jet-pipe axis x—x, i. e. in the axis about which the jet-pipe deflects and which coincides with the two leaf springs **6**.

For this purpose a bush or sleeve **22** receiving the smaller ball **19***b* may be adjusted in the direction of the jet-pipe axis x—x in the block **5**. Referring particularly to Fig. 3 this bush is provided with an outer screw thread **23** meshing with a screw thread bore in the block **5**. By rotating the bush **22** in the block **5** the effective position of the packing body **19** relative to the cup **21** and the leaf springs **6** may be readily changed. The bush **22** comprises an annular groove **24** communicating by means of a plurality of radial bores **25** with a longitudinal bore **26** in said bush and the channel **20** in order to render possible a communication of the pressure medium supply with the bore **3** or the channel **4**, respectively.

An important feature of the packing means herein disclosed is the provision of a packing body including two parts, the lower part **19***b* having convex tightening surfaces so as to be in only substantially linear contact with an inner cylindrical tightening wall of the cup **21**. The other part **19***a* of the packing body facing with the bush **22** is also shown to have a convex tightening surface. I prefer this embodiment because the packing body upon coming in the contact with the upper fitting wall of the bush **22** do not hinder the freedom of the jet-pipe movement in view of the possibility that the packing body may even upon contacting with the fitting wall of the bush **22**, maintain a position (forced upon it on any accounts whatever) by the jet-pipe.

PAUL PEGLAU.

PUBLISHED

MAY 25, 1943.

BY A. P. C.

P. PEGLAŬ

JET-PIPE RELAY

Filed March 1, 1940

Serial No.
321,769

Fig. 1

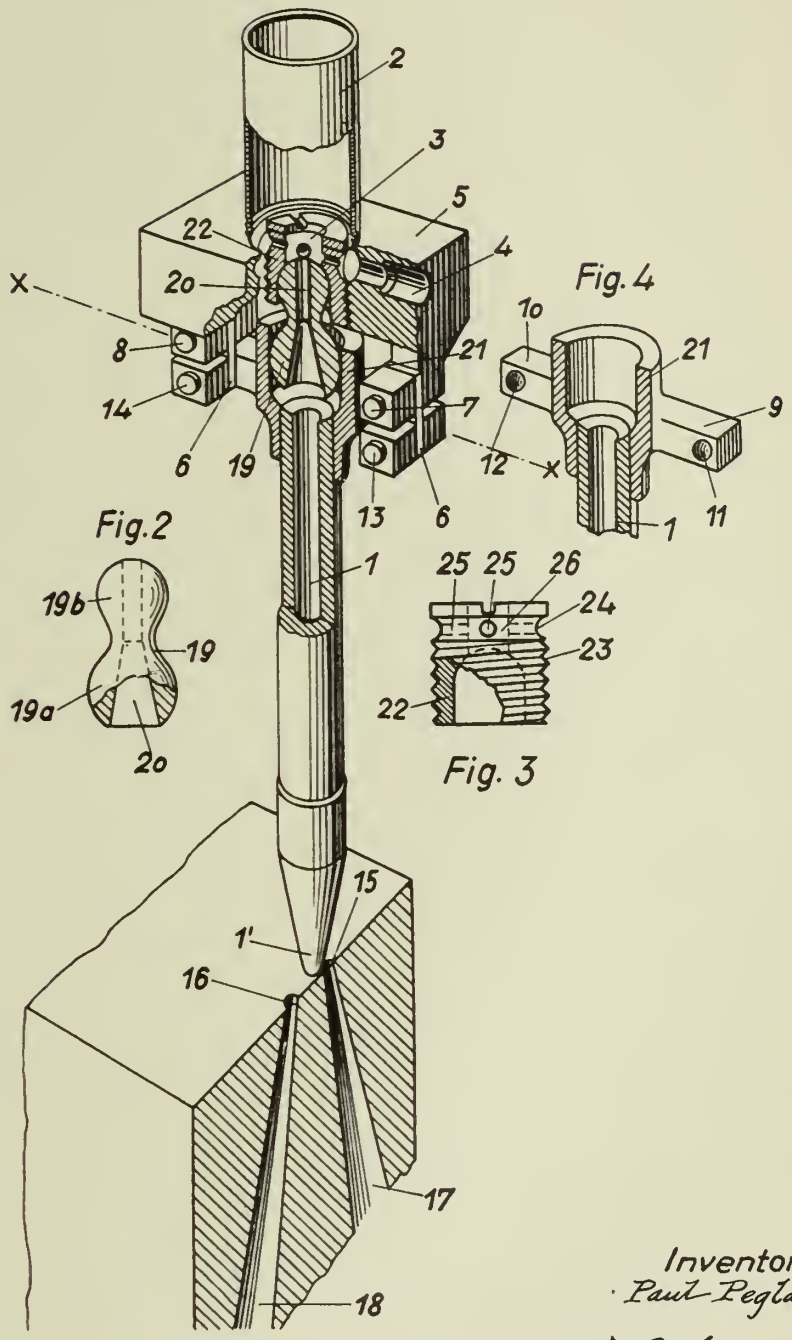

Inventor:
Paul Peglau

By A. P. Adams

Attorney

Published May 25, 1943

Serial No. 321,834

ALIEN PROPERTY CUSTODIAN

IMPELLER BLOWER OF THE ROTARY PISTON TYPE

Bruno Heimbach, Stuttgart, Germany; vested in the Alien Property Custodian

Application filed March 2, 1940

The invention relates to an impeller blower of the rotary piston type, containing impellers running in counter motion, and being sealed against each other and against the inner wall of the blower casing. In order to guarantee a good working order the faces as well as the circumference of the impellers must have as little play as possible, on the other hand, with respect to the high revolving speeds a metallic contact of the revolving parts with the casing walls must be avoided as far as possible. In order to fulfill the contradicting conditions, in the first place the impellers and the walls of the working space must be machined very exactly. Secondly the impellers must be centered very exactly within the casing and mounted in such manner, that in running none of the impeller faces can be pressed against the proximate face of the working space.

While the former of these two conditions may be comparatively easily reached by good workmanship, the fulfilment of the requirements named in the second place meets with considerable difficulties which may be obviated by the present invention. This is reached firstly by the fact, that the bushings of the bearings enclosing the impeller shafts form with the faces limiting the working space construction parts exactly fitted into the cylindric walls of the working space. As these walls must be most accurately machined, as stated above, an unobjectionable centering of the impellers is reached by the object of the invention, without additional fitting faces. The front walls provided with bushings may be fastened to the blower by means of two casing parts confining its walls towards the front, to which walls they are flanged showing each two bores enclosing tightly the bushings to which the front walls may be secured by the aid of ring nuts screwed onto the bearing bushings. One of these lids may here form the one front wall of a casing part enclosing the coupling gear. In this part some more of these bushings may be centered, containing the thrust bearings of the impeller shafts on the driving side, if the coupling gear should not be overhung on one side.

The front walls on the driving side being centered according to the invention in the cylindric inner walls of the working space, may be pulled out in order to exactly define the small air-gap required between the face of the impeller and the front walls of the working space. This is evident from the following description relating to the illustration of the object of the invention given by way of example in the drawing showing a longitudinal cross section of it through line II—II.

Within a casing 5 provided with a suction space 6 and a pressure space 7 are two impellers 8 rotating in counter motion, carrying at their circumference two vanes 9. In running the blower these vanes are moved with very little play along the exactly cylindrical inner walls 10 of the casing 5, and after leaving them engage also with very little play the grooves 11 which are slotted into the impellers 8. In order to exactly define the position of the impeller shafts 12, the bearings 14 provided at the front side of each impeller, as well as the bearing 15 and 16 are arranged in bearing bushings 17 and 18. These bushes are connected with the front walls 19 and 20 the accurately machined rims of which touch the inner walls 10 of the working space. Between the inner races of the two ball bearings 15 and 16 in the bushing 18 a sheet steel ring 21 is inserted by which the inner races are displaced axially to such an extent relative to the outer races that any axial play is eliminated. Between the inner race of the bearing 16 and the proximate collar 13 of the shaft, being formed as labyrinth packing, a ring shaped insertion 22 is provided, the thickness of which may easily be so dimensioned, that the play between the faces of each impeller 8 relative to each of the two front walls 20 may assume an exactly determinable small dimension. By means of the insertion 22 the parts of the bearings 15 and 16 which are adjusted axially free of play, and revolve together with the impellers 8, i. e. the inner races may be adjusted in axial direction relative to the impellers. The outer races of the ball bearings are fixed in the bearing bushes 18 by means of a threaded ring 23 screwed into these bushes, while a nut 24 screwed onto the end of each impeller shaft 12 serves for securing the inner races, the nut 24 pressing the not revolvingly guided gear wheel 25 on the axle towards the inner race of the bearing 15 and 16, a washer 26 and a pressure ring 27 being interposed, and these races with the insertions 21 and 22 being pressed against the shaft collar 13, formed as a labyrinth packing. If the coupling gears 25 are cut slantingly, which would be preferable with respect to a most noiseless operation, the angular position of the two impeller shafts relative to each other may be accurately adjusted by changing the thickness of one of the two washers 26 relative to the other one.

The two bearing bushes 18 are inserted into two sleeves 29 of the casing part 30 surrounding the coupling gears 25 with the aid of two ring nuts

28. The casing part 30 is closed by a lid 31 through which the hub of a driving flange 35 is led, being packed by means of the packing 33. In the same manner this driving flange is journaled stationarily upon the longer one of the two impeller shafts 12, as the gear wheel 25 on this shaft, and is kept in position as described above by the nut 24 together with the other parts 26 and 27 between the flange and the shaft collar 13 which is formed in the shape of a labyrinth packing. The hubs of the gear wheels 25 are journaled upon rollers 36, the outer races of which are inserted in bushings 38. These two bearing bushes are connected by flanges 39 each fitted into a recess bore on the face of the casing part 30 which are exactly coaxial with the sleeves 29. This arrangement also guarantees that the thrust bearings 36 can be adjusted exactly coaxial with the other bearings carrying the impeller shafts 12.

The bearing bushes 17 of the thrust bearings 14 are inserted into accurately fitting bores of a lid 40 to which they are screwed by means of ring nuts 28. The outer races of the bearings 14 are fixed within the bushings 17 by means of spring rings 34, while the inner races are pressed by means of nuts 24 against the shaft collars 43 formed in the shape of labyrinth packings. The diameter of these collars is somewhat larger than the inner diameter of the outer races, so that when using the customary roller bearings, the rollers of which are arranged in a cage provided on the inner race, the impellers may be mounted and dismounted together with the casing part 30 without taking off the lid 40. Furthermore this arrangement allows to put the lid 40 in the place of the casing part 30 and thereby to change the driving flange 35 from the left to the right hand front side of the casing 5. If the securing means of the parts 30 and 40 to the casing are coaxial and symmetric, the casing part 30 may, if required, be turned by 180° and in this way the impeller shaft provided with driving flange 35 may be arranged above the other impeller shaft. Thus the blower may be adapted to several different means of driving which specially come into consideration, if the device is to be used as a charging blower for internal combustion engines. This adaptability is accomplished by the fact that in leaving out the usual ways of machining, requiring the use of fitting pins, and of similar means, the accurately cylindrical machined inner walls 10 of the working space serve for centering the bearing bushes 17 and 18 connected with the frontwalls 19 and 20 which are held in proper distance from each other by the casing part 30 and the lid 40. On the other hand the distance between the front walls 20 and the adjoining faces of the impellers 8 and their vanes 9 may be dimensioned so small that though a direct metallic touch is avoided, only small gap-losses will occur. The length of the impellers 8 is preferably so dimensioned that the gaps between these and the front walls 19 also suit the above mentioned conditions, after the blower has warmed up to its normal temperature.

As the impeller shafts must be manufactured of a material of high strength like steel, while the impellers 8 proper and their vanes 9 preferably consist of light metal expanding strongly when heated, care should be taken that the impellers can expand relative to the impeller shafts 12 and preferably in such a way that an unobjectionable journalling of the impeller front sides which are opposite to the shaft collars 13 will be guaranteed. As shown in Fig. 1, this may be done by the fact that into the above mentioned front side of the impeller 8 a hollow shaft end 42 with a collar 43 is inserted. In the hollow space of same a strongly tightened spring 44 is placed, supported with one end by a shoulder 45 limiting the hollow space, and with the other end by the head 46 of a tension bolt 47 screwed into the shaft 12. In the second instance, shown in connection with the lower impeller, the shaft 12 is led through the impeller and is provided with a ring shaped shoulder 51 onto which thrusts an axle bushing placed over the shaft end and fastened to same with the screw 53. This screw is like the part 42 provided with a shaft collar 43 working as a labyrinth packing. On the face of the axle bushing 52, protruding into the impeller, one end of a strongly tightened spiral spring 54 is supported, the other end of which thrusts against a ring shaped face 55 provided within the hollow impeller. By means of this spiral spring the impeller, which is longitudinally moveable relative to the part 52, is pressed strongly against the shaft collar 13.

BRUNO HEIMBACH.

PUBLISHED

MAY 25, 1943.

BY A. P. C.

B. HEIMBACH

IMPELLER BLOWER OF THE ROTARY PISTON TYPE

Filed March 2, 1940

Serial No. 321,834

2 Sheets-Sheet 1

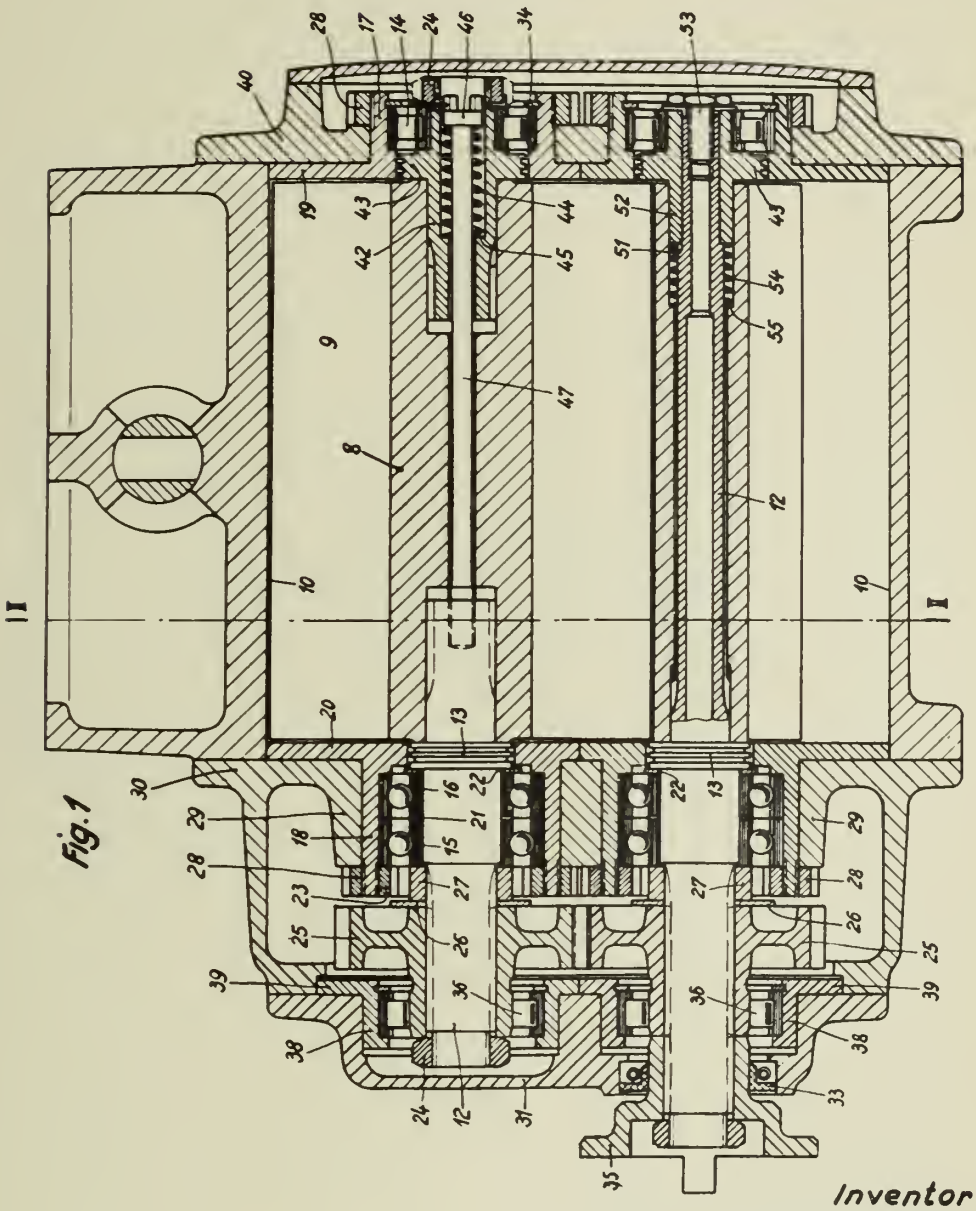

Inventor

Bruno Heimbach

By

Attorney

PUBLISHED

MAY 25, 1943.

BY A. P. C.

B. HEIMBACH

IMPELLER BLOWER OF THE ROTARY PISTON TYPE

Filed March 2, 1940

Serial No. 321,834

2 Sheets-Sheet 2

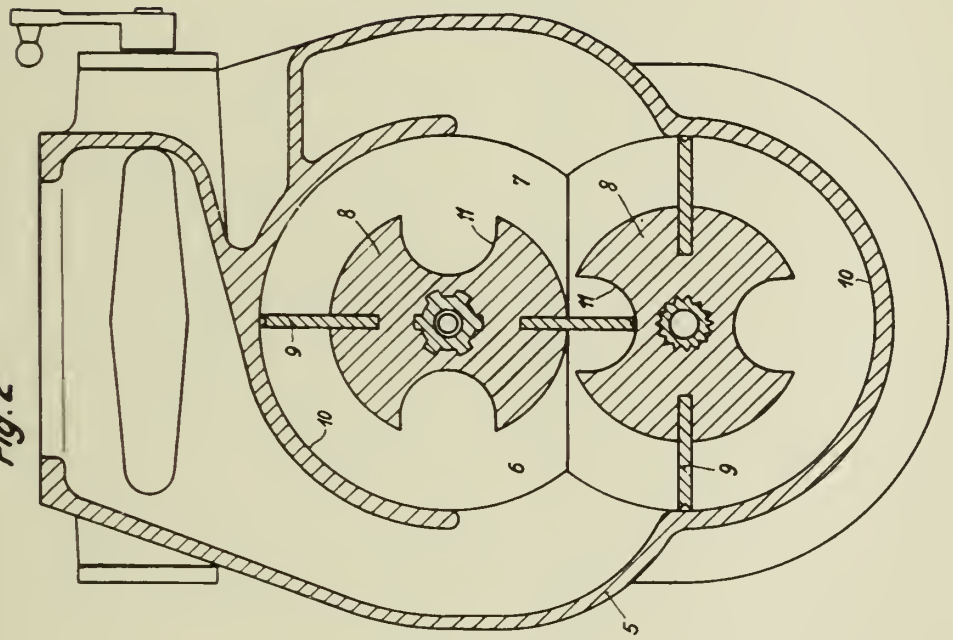

Fig. 2

Inventor
Bruno Heimbach
By
Adam A. Rosenthal
Attorney

Published May 25, 1943

Serial No. 322,290

ALIEN PROPERTY CUSTODIAN

CAR BODY

Kurt Kobligk, Berlin, Germany; vested in the Alien Property Custodian

Application filed March 5, 1940

The invention relates to improvements in the construction of car bodies for use on automobiles and other cars, the primary object of the invention being the provision of a car body in which the cornices or eaves are designed so that no separate pressings need be used for them.

According to the invention, either the upper portions of the side panels of car or the side portions of the roof panel or both of them are provided with a channel-like or similar groove or grooves forming a cornice which—or at least the bottom of which—does not project beyond the external face of the car body.

The invention may be applied to either cars composed of sheet metal panels or pressings, or to cars composed of an either wood or metal framework to which an external sheeting is secured, or to car bodies the panels or other parts of which are made from synthetic plastics.

In the case of car bodies made of either panels or pressings where the side panels are connected with a roof panel, the cornices are so designed as to either coincide with the line connecting roof and side panel or to be situated close to the latter.

A number of forms of the invention are shown in the attached drawings in which

Fig. 1 is an external view of the car body and

Figs. 2 to 8 are sectional views on an enlarged scale, approximately on the line 2—2 of Fig. 1.

With the types shown in Figs. 2 and 3, the roof 13 is provided with a flange extending downwardly, to which the correspondingly bent upper edge of the side panel 11 is secured, so that these two members form a box-shaped cross-section. The cornice 12 and the door or window rabbet 14 are pressed on to the side panel member.

With the types shown in Figs. 4 and 5, the cornice 12 and the upper rail 15 above the door or window respectively are made integral with the roof, the box-shaped girder being formed by connecting with this member the upper edge of the internal lining of side panel 16.

The cornice shown in Figs. 6 and 7 is integral with the roof 13. As shown in Fig. 6, the upper edge of the internal lining 16 is secured to the vertical stay of the roof, and as shown in Fig. 7, the upper edge of the external lining 11 is secured to it, so as to form the box-shaped longitudinal girder.

The section shown in Fig. 8 is substantially identical with the sections shown in Figs. 4 and 5, but here the upper rail 15 above the door or window respectively is integral with the external lining 11 of the side panel.

In this manner there is formed an upper lateral longitudinal girder of box-shaped cross-section consisting only of the roof pressing and one side panel member and containing at the same time the cornice and the rabbet for the door and window respectively.

These improvements in making the cornice as shown by the invention will simplify the pressing of the individual members which are given such a shape as to permit of their being readily kept in stock without being damaged. Furthermore, the size of the sheets will be reduced.

Owing to the absence of separate pressings for the cornice the number of welds will be reduced and simplified. At the same time, a car body having a box-shaped girder at the lower edges of roof will be formed.

If a sliding roof is provided, the sliding channel for the roof can drain off direct into the cornice without requiring any separate, long, and expensive roof draining tubes of rubber, as have been used hitherto.

KURT KOBLIGK.

PUBLISHED
MAY 25, 1943.
BY A. P. C.

K. KOBLIGK
CAR BODY
Filed March 5, 1940

Serial No.
322,290
2 Sheets-Sheet 1

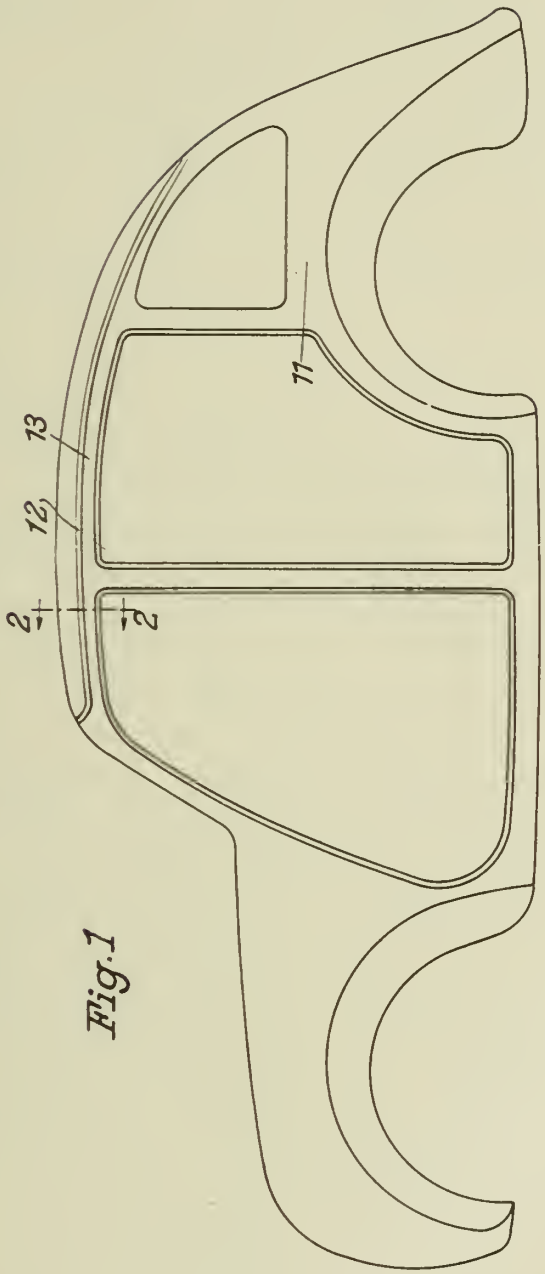

Fig. 1

Inventor:
Kurt Kobligk
By John P. Turbox
Attorney

PUBLISHED
MAY 25, 1943.
BY A. P. C.

K. KOBLIGK
CAR BODY
Filed March 5, 1940

Serial No.
322,290
2 Sheets-Sheet 2

Fig. 2

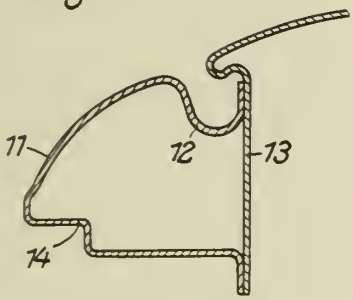

Fig. 3

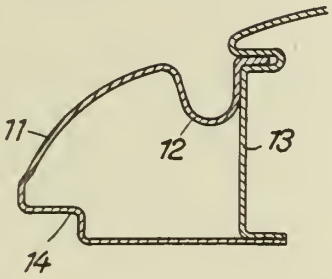

Fig. 4

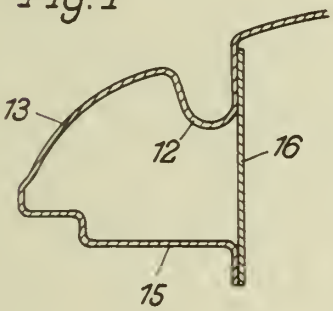

Fig. 5

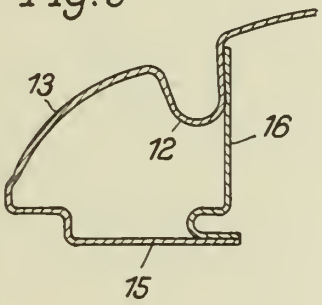

Fig. 6

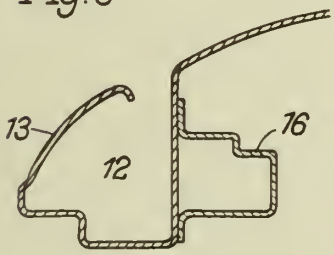

Fig. 7

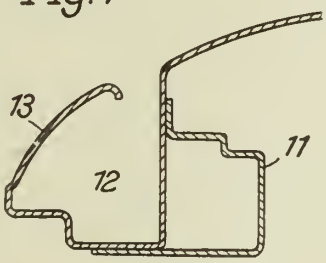

Fig. 8

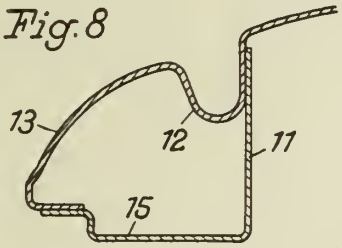

Inventor:
Kurt Kobligk
By John P. Turbor
Attorney

Published May 25, 1943

Serial No. 322,891

ALIEN PROPERTY CUSTODIAN

LOOP ANTENNA WITH IRON CORE

Fritz Bergtold, Kiel, Germany; vested in the Alien Property Custodian

Application filed March 8, 1940

Loop antennae without iron core accidentally consist of two or more windings (coils), which serve to the reception in several wave bands. These coils are switched together, corresponding to the wave band it is to receive.

In many purposes it is prevented to work with several coils. In the case the receiver is tuned to the higher frequented wave, the coil for another wave band may produce a reaction. Another disadvantage of a loop antenna without iron core in the case it is arranged on a vehicle or an airplane is the large room for several coils. At least the self-capacity of such loop antennae with several coils is increased in a nonwished manner.

If an iron core is employed it is to attain an intensive coupling between the single windings and also between several windings. By this appearance it is to suppose, that these disadvantages increase, if an iron core is used for the coils. Only the larger room for a frame with several coils is in this case not worthy of notice. Indeed a loop antenna with an iron core and several coils has not been proposed with prior art.

According to the present invention on a loop antenna with an iron core are arranged several coils, thereby profitting the following effect: The intensive coupling between the coils is innoxious, if the self-wave of the coil for the lower frequence is in sufficient distance from the wave band, in which the other coil is active. This is to accomplish in a better manner, if an iron core is provided. In such a loop antenna it is possible to reduce the internal- or inter-winding capacity.

The loop antenna according to the invention—an iron core, provided with several coils—has also another important advantage. A further object of the invention is to make the iron core into two parts, each part having a coil. Thereby the opposite coupling is also reduced. In such an arrangement the part, of which is not made use is barred by a short-circuited coil.

The foregoing and other objects of the invention will be more clearly understood from the following description when read in connection with the accompanying drawing, in which examples are shown.

In Fig. 1 is shown the parting of the iron core. On both parts are arranged the coils W_1 and W_2. On the iron cores are also arranged two coils V_1 and V_2, which may be short-circuited if it is wished. In such an arrangement it is recommentable to provide an electric leading shield between the cores and the coils. This shield may be slitted or insulated overlapped.

If an iron core is used, which consists of several wires of iron, roped corresponding to a litzendraht, or an iron core, which consists of several bands, the core K may be arranged submersed in the vehicle or airplane F (Fig. 2); thereby the coils W, which are to switch, are arranged near the receiver E. Now it is possible to arrange the contacts for the switching of the frame coils in the receiver. The proposition to provide a shield between the coils and the iron core is also recommentable for the example according to Fig. 2. In this arrangement, a shield is provided between the points A and B.

FRITZ BERGTOLD.

PUBLISHED

MAY 25, 1943.

BY A. P. C.

F. BERGTOLD

LOOP ANTENNA WITH IRON CORE

Filed March 8, 1940

Serial No.
322,891

Fig. 1

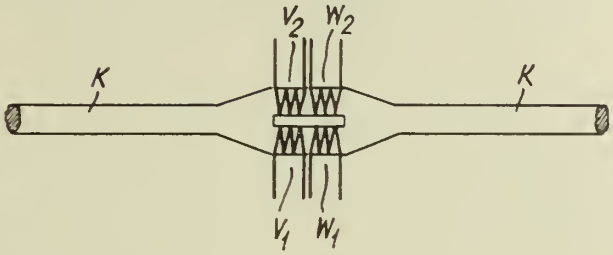

Fig. 2

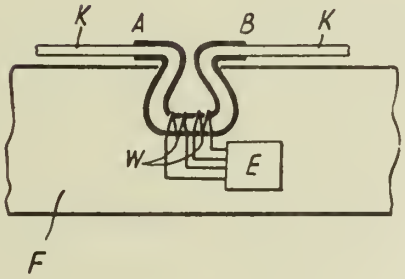

INVENTOR
FRITZ BERGTOLD
BY H. G. Grover
ATTORNEY

Published May 25, 1943 Serial No. 323,201

ALIEN PROPERTY CUSTODIAN

AEROPLANES AND HYDROPLANES HAVING FOLDING WINGS

Emile Julien Eugène Dewoitine, Neuilly-sur-Seine, France; vested in the Alien Property Custodian

Application filed March 9, 1940

The present invention has for object improvements in aeroplanes or hydroplanes having folding wings and is mainly characterised by the fact that the end part of each wing is pivoted on at least one intermediate part which, in its turn, is pivoted on the fixed part of the wing or on the hull or fuselage; the pivotal joints extend according to the depth of the wing and are combined, on the one hand, with locking means and, on the other hand, with devices for operating the pivoted parts.

The locking and operating means, which can be of any type whatever, are controlled at a distance and in particular from the pilot's seat.

In an embodiment, the locking and unlocking means are constituted by bolts of the screw and nut type, simultaneously controlled by a pneumatic or hydraulic jack or other equivalent systems controlled at a distance.

The means for moving the pivoted parts of the wing, when the locking means are put out of action, are constituted by pivoted arms also controlled by pneumatic or hydraulic jacks or other equivalent devices controlled at a distance.

The invention also extends to other particular points which will appear in the following text given with reference to the accompanying drawings, by way of example only, in which:

Fig. 1 is a partial front view of a hydroplane having folding wings devised according to the invention.

Fig. 2 is a diagram of the locking and unlocking control in the median or intermediate part of the wing.

Fig. 3 is a diagram of the locking device in a transverse plane extending according to the depth of the wing and in the vicinity of a pivotal joint.

Fig. 4 is a plan view of a wing structure.

The hydroplane, illustrated by way of example only, comprises two floats 1, a hull or fuselage 2 and wings the roots 3 of which, extending from the hull 2 to the attaching members or stay-rods 4 of the floats 1, are fixed, the other parts of the wing being pivotally mounted.

According to an important feature of the present invention, the pivoted parts of the wing comprise the ends 5 and the intermediate parts 6. In the example illustrated, each wing comprises a single part 6, but a plurality of intermediate parts 6 might be provided without departing from the scope of the invention.

For each wing, the intermediate part 6 is pivoted at 7, on the fixed part of the wing and the end 5 is pivoted at 8, on the intermediate element 6. The pivotal joints 7 and 8 are arranged on the dorsal part of the wing and even above the latter in the region extending towards the leading edge, as particularly shown in Fig. 3.

In the intermediate part 6 are arranged two jacks 9 and 10 respectively pivoted at 11 and 12 and the rods of which are, in their turn, pivoted at 14 and 15 on ferrules 16 and 17. These jacks can be of any type whatever, but it appears advantageous to use pneumatic or hydraulic jacks the distant control of which can be ensured through the medium of very simple means. Preferably, said jacks are controlled from the pilot's seat. The jacks 10 and 9 are successively or simultaneously controlled so as to bring each wing to the position indicated in dot and dash lines in Fig. 1, the parts 5 and 6 occupying the positions 5^a and 6^a. The ends 5^a partially overlap above the hull 2, in folded position and they are locked by a pin or the like which can be easily put in or out of action from within the hull.

The wings being folded as previously indicated, the cumbersomeness in width of the aeroplane or hydroplane is considerably reduced, this facilitating the putting up and hoisting, particularly in the case of hydroplanes allocated to war-ships.

Figs. 2 and 3 more particularly illustrated a general view of the mechanism for locking and unlocking the pivoted parts of the wing. Each pivoted part comprises three bolts 18, 19 and 20, respectively arranged towards the leading edge, in the central ventral region and towards the trailing edge. Said bolts respectively screw in threaded bores of members 18^a, 19^a and 20^a so as to engage into corresponding keepers 18^b, 19^b and 20^b. The bolts 18 and 20 are connected to a common shaft 22. The connection between the bolt 18 and the shaft 22 is ensured by a shaft 23 mounted as a cardan joint, on the one hand, at 24, on the bolt 18 and, on the other hand, at 25 on a sleeve 26 movable only in translation on the shaft 22. The connection between the bolt 20 and the shaft 22 is ensured by a shaft 27 angularly connected at 30 to the bolt 20 but movable in translation relatively to the latter.

The bolt 19 and the shaft 22 respectively comprise wheels 31 and 32 simultaneously controlled by a chain 33 passing over a driving wheel 34 on the spindle 35 of which is rigidly secured a toothed wheel 36 meshing with a rack 37 cut in the rod 38 of a jack 39. As will be more particularly seen in Fig. 2, the chain 33, which is guided at 40, simultaneously passes over two series of wheels 31—32 so as to simultaneously con-

trol both series of bolts ensuring the locking of the pivoted parts **5** and **6** of the wing. The jack **39** is preferably of the pneumatic or hydraulic type and it is controlled at a distance, in particular from the pilot's seat.

Fig. 4 is a plan view of the wing. The curvature flaps **42** and the warping ailerons **43** are sectioned according to the pivotal joints **7** and **8**.

It is obvious that the embodiment described and illustrated is given herein only by way of indication and not in a limiting sense. All modifications or changes which do not alter in any way the main features above set forth or the desired result, remain included in the scope of the present invention.

EMILE JULIEN EUGÈNE DEWOITINE.

PUBLISHED

MAY 25, 1943.

BY A. P. C.

E. J. E. DEWOITINE
AEROPLANES AND HYDROPLANES
HAVING FOLDING WINGS
Filed March 9, 1940

Serial No.
323,201

3 Sheets-Sheet 1

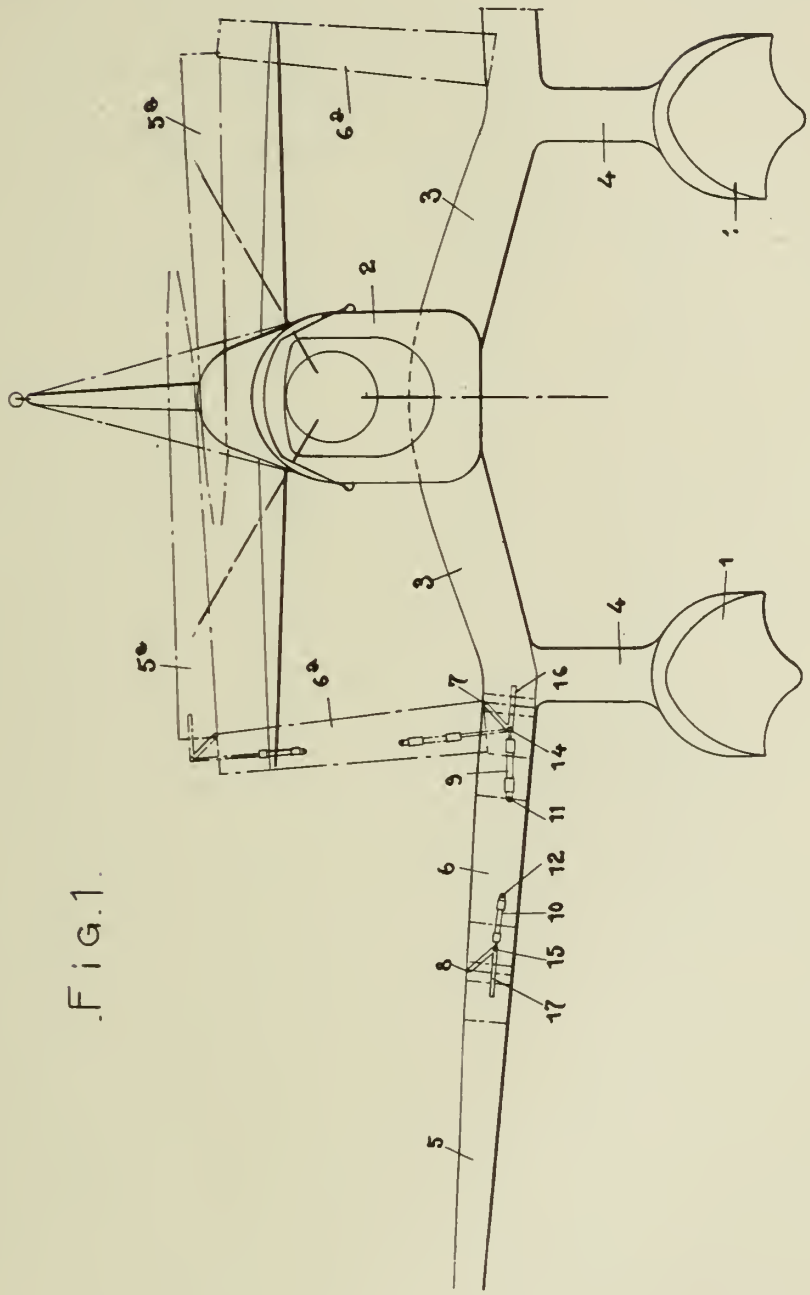

Fig. 1.

INVENTOR:
EMILE JULIEN EUGENE DEWOITINE
BY: Haseltine, Lake & Co
ATTORNEYS

PUBLISHED

MAY 25, 1943.

BY A. P. C.

E. J. E. DEWOITINE
AEROPLANES AND HYDROPLANES
HAVING FOLDING WINGS
Filed March 9, 1940

Serial No.
323,201

3 Sheets-Sheet 2

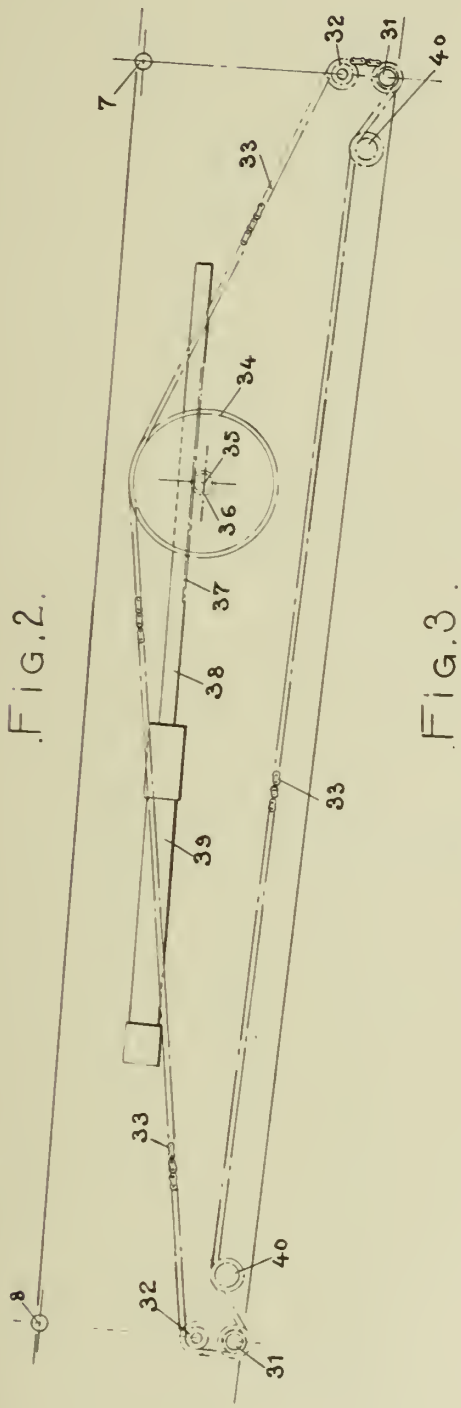

FIG. 2.

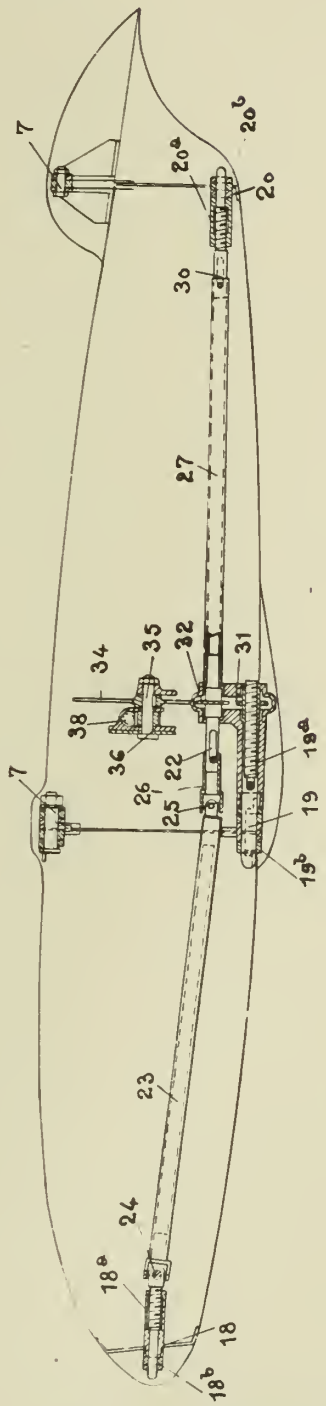

FIG. 3.

INVENTOR
EMILE JULIEN EUGENE DEWOITINE
BY: Haseltine, Lake & Co
ATTORNEYS

PUBLISHED

MAY 25, 1943.

BY A. P. C.

E. J. E. DEWOITINE
AEROPLANES AND HYDROPLANES
HAVING FOLDING WINGS
Filed March 9, 1940

Serial No.
323,201

3 Sheets-Sheet 3

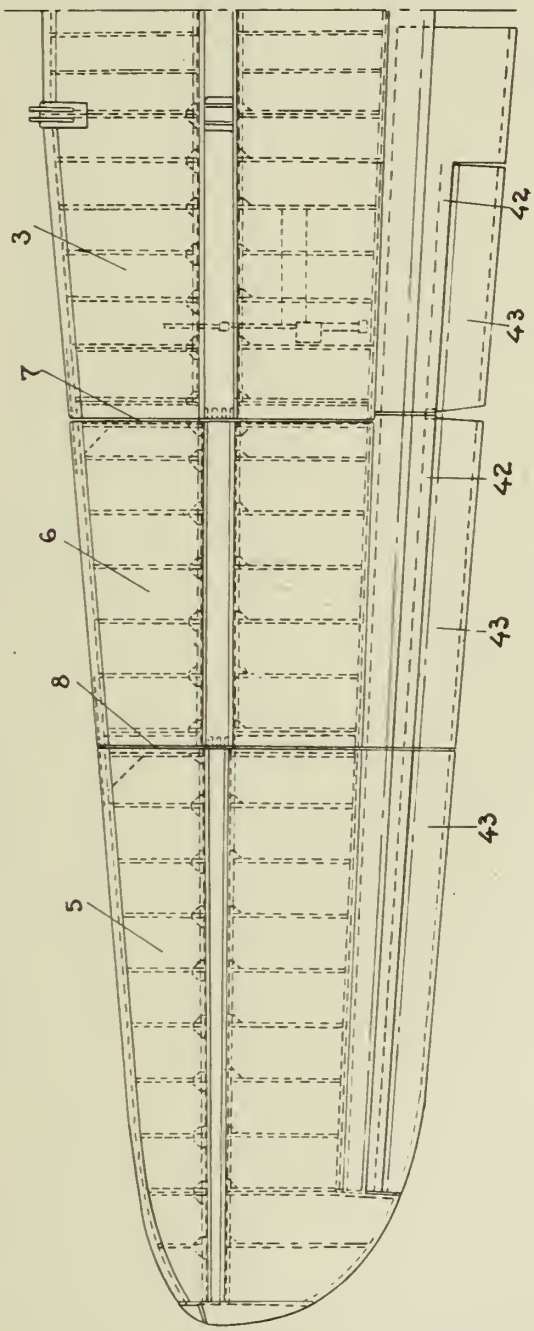

Fig. 4.

INVENTOR:
EMILE JULIEN EUGENE DEWOITINE
BY Haseltine, Lake & Co
ATTORNEYS

Published May 25, 1943

Serial No. 323,450

ALIEN PROPERTY CUSTODIAN

RADIO APPARATUS

Leon Ladislaus de Kramolin, Haarlem, Holland; vested in the Alien Property Custodian

Application filed March 11, 1940

This application is a continuation in part of the copending Application No. 749,088, filed October 18, 1934.

My invention relates particularly to a method of regulating radio receiving sets and the like by means of inductance variations in iron cores.

As is well-known, with sufficiently fine subdivision of suitable types of iron alloys, it is possible to provide high-frequency coils with magnetic cores. If the cores are made displaceable within the coils tuning can be effected by such displacement in a manner well-known per se. This variation of inductance, however, can also be obtained in a different manner, e. g. by varying the preliminary magnetisation of the core by means of a direct current. Such a method of varying the inductance offers a large number of possibilities of utilization, one very interesting instance of which comprises the provision of an automatic volume control.

In the simplest case, such an apparatus works as follows: An oscillatory circuit, tuned in some manner to the wave to be received is provided, the oscillations of which are applied to an audion. In the oscillatory circuit, a part or the whole of the inductance is arranged on a coil of ferro-magnetic material e. g. Ferrocart. In the anode circuit of the audion, there is provided a simple filtering means, which separates the direct current component of the anode current from the alternating current component. The alternating current component (modulation frequency) is supplied to the consumer, that is, a telephone or a further amplifier, and the direct current component is led through a second winding on the ferromagnetic core of the tuning coil.

On increase of the audion current or decrease of the audion current (according as to whether grid or anode current rectification is employed), the result can then be obtained that, if normal volume is employed, the coil is just tuned to the oscillation to be received. If the volume increases beyond an agreeable extent, then (assuming that working is being effected with the detector tube at the lower bend) an increase of the anode current causes a decrease in the inductance of the coil, which detunes the receiving oscillatory circuit to such an extent that an agreeable volume is just restored. It is seen that a simple volume control device can be assembled in this manner. In this case it is possible, not only to decrease the volume if the reception is too powerful, but also, quite simply if the volume is insufficient, in which case the disturbance level would be too high in proportion, to obtain a decrease of volume. For this purpose, it is only necessary to balance the tuning accurately at a mean value of the volume. If the volume falls below this value, then by weakening the direct current component of the anode current of the detector tube, an increase of the inductance and thus detuning will occur, while with excessive volume or field strength of the receiver oscillation at the receiving station, the self-inductance becomes too small. In normal automatic volume control arrangements there often exists an undesirable relationship between the time constant of the regulating circuit and the regulating quality or other characteristics of the regulator. With the present construction and also in all other possibilities discussed here, however, it is possible regardless of the time constant, to suppress any other action between the regulating and regulated circuit by entirely decoupling the regulating circuit from the regulated circuit, e. g. by use well-known per se of a three-limb transformer or the like. If due to small asymmetries in the masses of the limbs or in the coil configuration, there should be no complete decoupling at the outset then a subsequent correction can be obtained either by displacement of individual convolutions or groups of convolutions or by readjusting the core by a slight subsequent deformation, say, by cutting off small particles or by deformation by pressure, which is quite possible in view of the relatively soft consistency of such cores.

Should the presence of a sharp resonance curve cause an excessive instability in the volume, any desired flattening of the regulating curve may be produced by increasing the damping of the circuit. It is also possible by the use of chain conductors to deform the resonance curve in such a manner that the desired regulating characteristic is produced. In order that the selectivity of the reception may not be impaired by such measures, individual invariable, more or less sharply tuned, circuits may be employed for the actual receiving selection and these circuits coupled to the detector tube by circuit variable in its tuning in accordance with the volume in the manner hereinbefore described. Of course, any desired number of high-frequency amplifying stages may also be connected in series with the detector tube, which stages may be influenced by the receiving field strength in a similar manner as has been herein described for a detector. The greater the number of stages in which the influencing is effected, the greater of

course is the effect. In order, to avoid, particularly in the case of a number of circuits, displacing the resonance position of the whole receiving system within the frequency spectrum in accordance with the volume, it may be preferable in two successive circuits or else within a single circuit, by reversal of the direction of current in the preliminary magnetisation windings on occurrence of the regulating action, to displace the resonance position of the part-circuits of a system in the opposite direction in the frequency spectrum, so that the resultant resonance position remains unchanged. Since the regulating circuit is decoupled in relation to the regulated circuits, the same regulating current in series-connection or parallel-connection may traverse the regulating windings of the transformers of a larger number of series-connected amplifier stages without any tendency of the successive amplifier stages to oscillate, arising. To this end, exact decoupling is alone essential, and this can be ensured by any means well-known per se. In order also to prevent capacitive back-couplings through the regulating line, it is preferable to provide for good direct earthing or earthing effected through adequate capacities. However, as is hereinafter shown, volume control is not only obtainable by means of detuning. A very simple alternative for instance, comprises automatically regulating the back-coupling, the back-coupling being effected through one of the aforementioned ferromagnetic mass cores or the like.

Other regulating actions can also be obtained in accordance with the invention: Thus, for instance, it is well-known that with only weak reproduction an apparent displacement of the deep sounds occurs. Since, variation of the preliminary magnetisation causes variation of the inductance it is possible with low-frequency transformers or low-frequency sound monitoring arrangements, by means of filters etc., to ensure that the constants of these constructional elements automatically vary in such a manner that the percentage of deep sounds is increased or reduced as desired in relation to the percentage of high sounds, so that with changes of volume, effected for instance, by a manual regulator, provided in addition to the automatic regulator, the inductance of the low-frequency transformers or the low-frequency chokes or any kinds of smoothing members are so varied that in addition to the automatic or non-automatic volume control, a variation of the timbre automatically occurs in accordance with a predetermined law. The means for this purpose are no doubt known. If it is desired to obtain an increase in the percentage of deep sounds, then, for instance, in low-frequency transformers, the result will be obtained that due to the reduction of the general volume and due to the preliminary magnetisation reduced thereby, in a corresponding winding, the inductance of the transformer increases whereby, as is well-known, the transmission of deep sounds is also favoured and vice-versa. If an increase in the anode direct current, or other current component employed for preliminary magnetisation, is to produce an increase instead of decrease in the inductance, then this can be done simply by providing a constant preliminary magnetisation by means of a constant direct current or permanent magnet in addition to the variable magnetisation, in such a manner that the variable and fixed preliminary magnetisations act in opposition to one another. As the variable magnetisation diminishes, the fixed predetermined preliminary magnetisation is then no longer counter-balanced and hence comes into action.

In addition to the methods of automatic volume control and automatic tone control already discussed, it is possible according to the invention to effect tuning of an apparatus quite advantageously, not for the purpose of volume variation, but for the purpose of adjustment to different transmitters. Since it is possible to tune oscillatory circuits merely by varying the direct current intensity of the preliminary magnetisation, this provides, for instance, a method of adjusting a receiver which may be carried out with a very small number of mechanical parts. Since a tuning coil having a Ferrocart or a similar core, and a blocking condenser connected in parallel therewith occupy an extremely small space, a variable tunable oscillatory circuit can in this case be arranged in an extremely small space. The space which this oscillatory circuit requires is so small that it can even be arranged in the base of an electron tube or valve. The variation of the tuning can, in this case, be effected in an extremely simple manner, since it is only necessary to provide on the coil an additional direct current winding so dimensioned that, with a core of given mass, it allows sufficient variation of the preliminary magnetisation. Since, therefore, there need no longer be any direct mechanical contact between the oscillatory circuit to be adjusted and the tuning means, this method provides an ideal solution for the remote control of receivers. For the operator to tune the oscillatory circuit from any desired distance away, it is only necessary for him to vary the magnetisation by means of a variable resistance or the like, for instance a rotary resistance or else a carbon compression resistance which, as is well-known, allows a smooth variation of resistance. This manner of varying inductance is very favourable also for the arrangement of tuned oscillatory circuit at place where a variation of tuning can be mechanically effected only with difficulty, such as, for instance, within the vacuum space of an electron tube, since the oscillatory circuit constants are varied without mechanical means. This method of tuning is particularly favourable in high-frequency amplifiers which work, for instance, with a choke-coil coupling. In such amplifiers, it is preferable, in order to reduce stray capacity, to arrange the coupling choke coil in the interior space of the tube. Thus, for instance, in multiple tubes containing several systems coupled together, the coupling choke may be arranged within the tube in which case the wave band to be transmitted can be displaced at will from outside, simply by varying the preliminary magnetisation. However, the method is also useful for the tuning of ordinary series high-frequency amplifiers.

As has already been shown, when using three-limb transformers or similar arrangements which prevent coupling between the tuned and the tuning circuits, it is possible to remove any danger of mutual coupling taking place between amplifier stages when several amplifier stages are simultaneously tuned by connecting the preliminary magnetisation windings of all these amplifier stages in series or in parallel. In this manner therefore, it is easily possible to construct a set with single-knob manipulation. In order that variations of the preliminary magnetisation

may act uniformly on the individual circuits to vary their tuning, it is possible by displacement of turns or groups of turns to pre-arrange that the individual preliminary magnetisation coil and the individual oscillatory circuit coil match one another as accurately as possible; alternatively, however, the cores per se themselves, which are rather soft can also easily be corrected for balancing purposes by cutting off particles or by deformation. Finally, it may be preferable to make the mass cores conical, whereby adjustment may be effected by adjusting the extent to which the mass cores enter each particular coil. Likewise, the small blocking condensers which serve for completing the oscillatory circuits may either themselves be rendered slightly variable by compression screws in order that adjustment may be effected, or else small variable condensers, similar to the well-known trimming condensers provided on ganged rotary condensers may be connected in parallel with the blocking condensers, to permit exact balancing. The variation of the receiving ranges in this case, may be effected either in the normal manner by the connection and disconnection of groups of turns or else by the parallel connection of larger or smaller blocking condensers.

The construction of tuning variometers is also very much easier to carry out by means of ferromagnetic iron cores, since the coupling can be varied by changing the position of the coils to a much greater extent if the flux is concentrated by ferromagnetic cores. The various attempts to construct receivers which allow of receiving the whole wave band, by simultaneous variation of capacity and inductance, on a single revolution of the interconnected variable tuning elements, therefore, become much more promising here without having to resort to such dimensions of the condensers that strong damping and thus unfavourable reception results.

The method of automatic volume control already mentioned above can, of course, also be combined with the described method of tuning by varying the preliminary magnetisation, in which case very simple apparatus are then obtained in which both tuning and volume control are obtained merely by varying the preliminary magnetisation in different windings. Since very few mechanically moved tuning means are required, this provides ideal apparatus, particularly for remote control, since manual volume control can also be effected by variation of the preliminary magnetisation. An apparatus is thus obtained wherein single-knob tuning of almost any desired number of oscillatory circuit together with both manual and automatic volume control is merely by varying the current intensity of preliminary magnetisation currents, an operation which can be effected from any number of points located at any distance from the receiving apparatus. Such apparatus are particularly suitable in combination with amplifiers constructed in accordance with British Patent No. 415,079. The use of saturating tubes in the anode circuits as described in the above British Patent considerably simplifies the construction of the main parts of the apparatus and the decoupling arrangements, owing to the intense filtering action of these tubes against mains alternating current and also due to the mutual decoupling action of the individual stages, so that an extremely simple apparatus is obtained. In order to prevent the emission from the cathodes, when using photo-cathodes in the saturating tubes from being dependent upon the general intensity of illumination at the receiving station, artificial illumination is of course used for this purpose. This can be obtained, for instance, in an apparatus which is provided with indirectly heated tubes having high voltage cathodes for direct connection to direct and alternating current, by using for the production of the artificial illumination that part of the mains voltage, which must be taken up in breaking down the mains voltage to the voltage required for the cathode operation. However, since mains fluctuations are manifested in a disturbing manner in this case by fluctuating disturbance of the photo-cathode current, it is desirable to use light radiators which are very inert thermally, such as for instance, lamps, constructed in the manner of the well-known Nernst lamp. This form of illumination is desirable in all cases where normal lamps cause excessive disturbances in cooperation with photo-cells, such as, for instance, in the reproduction of sound films, etc.

By the combination of the above described tuning and volume control by variation of the preliminary magnetisation with the suggestion last mentioned, which are described in the present Applicant's British Patent above referred to apparatus are obtained which are of extraordinary simplicity and reliability. However, by employing the method of tuning based on a variable preliminary magnetisation, it may be difficult in some circumstances to cover a sufficiently large range of reception without the connection and disconnection of condensers or coil parts. In this case, the range to be received may be subdivided into a relatively large number of wave ranges in the manner described in British Patent No. 409,737, in which case, as has been described in detail in that patent, this subdivision has the further advantage that the balancing of several simultaneously tuned oscillatory circuits is substantially simplified, so that a particularly simple form of single-knob manipulation is thus obtained.

The variation of the preliminary magnetisation can also be employed even to obtain the adaptation of the mains transformer to incidentally occurring mains fluctuations or else to construct a mains transformer which can be employed without change of connections on different mains voltages. To this end the effective inductance of the core is varied by means of rectified current from a secondary winding for instance, the current from the secondary winding supplying the anode current which must, in any case be rectified in such a manner that as the main voltage increases, the secondary voltages decrease, at least in those windings where excess voltages are dangerous, that is, particularly in the heating windings. A fluctuation of the anode voltage is generally not so detrimental, owing to the fact that the grid bias is usually produced at the present day by the voltage drop in a resistance, whereby the grid bias automatically adapts itself to the changed anode voltage and automatic control of the volume can be effected in any case. Hence, a small auxiliary transformer which merely supplies the heating current for the tubes, can be regulated by means of a mains transformer, which supplies the anode voltage and the like. The tuning and regulation becomes very simple, of course, when superheterodyne receivers are employed, particularly of the kind according to British Patent No. 301,498 and the addition thereto No. 313,414, since in this case only the

tuning of a single circuit is to be varied, which of course renders any type of balancing superfluous. Automatic noise suppression in combination with automatic fading compensation can also be obtained in simple circuits even with a pure form of magnetisation curve, since the curve exhibits a mean straight part, which would then serve for maintaining the sound volume within certain limits while the first flattening which occurs at the beginning of the curve may be used for noise suppression while the second flattening which occurs at saturation may be employed for the compensation of fading. In the same way, of course, the constructional examples described here primarily for fading compensation can be used accordingly for the correction of amplitude in sound film and sound disc recording and such cases.

The method of inductive tuning herein described may be used also in the case of capacitative tuning, wherein a tuning capacity is used which is varied by a bias. To this end use may be made as tuning condenser of an arrangement such as an electrostatic loud-speaker, wherein by varying the bias the capacity is varied. The above description as applied to inductive influencing may then be read as applying to capacitative influencing.

A number of further possibilities which arise when using mass cores of the nature of Ferrocart material may be mentioned. In the first place, it is possible to obtain mechanical attraction of such cores as with normal alternating current magnets. This fact enables for instance, high-frequency relays to be constructed for use in transmitting and receiving circuit, particularly in receiving circuits, wherein a mass core attracts an armature of an identical ferromagnetic high-frequency mass. However, telephone receivers, loud-speakers, sound recording instruments and the like can then also be directly constructed, which enable direct conversion of high-frequency oscillations into mechanical oscillations and vice versa. Similarly voltmeters and ammeters adapted to be directly operated with high frequency, galvanometers, power meters, etc., may be constructed in which, however, the normal types of iron are replaced with such mass material. In this case, amplification of the action may be effected by introducing back-couplings, by means of discharge tubes or other amplifying means. Therefore, for instance, in a telephone, the mass core of which is directly energized by high-frequency currents, amplification can be obtained by the use of high-frequency back-coupling. Of course, low-frequency back-coupling would also be possible per se. Nevertheless, the high frequency back-coupling in this case has the advantage that no appreciable distortion is introduced thereby. Since, however, as has been shown above, tuning may be effected by varying the preliminary magnetisation or the coil-spacings with respect to one another or to the iron core or the like, it is possible in this manner to combine both the tuning circuit and the reproducing instrument and possibly also a volume control all into one constructional element.

In the devices mentioned for the conversion of mechanical into electrical energy, it is possible, for instance, with sensing members, either to vary the coupling at more or less constant frequency by variation of the preliminary magnetisation or the like, or else to vary the frequency whereby the transfer of energy between two circuits is then varied due to the detuning between two circuits. The above suggestion for the construction of high-frequency instruments operating directly in high frequency by the method usual for low-frequency is also of particular application in directional reception, since in such apparatus the goniometers can then be constructed in like manner to soft-iron instruments. Thus, by more or less intense preliminary magnetisation, which can possibly be obtained by permanent magnetic fields, assymmetry of the magnetic fields may be obtained on change of direction of the high-frequency current, so that instruments can even be produced on the system of moving-coil direct current instruments.

By virtue of the asymmetry of the magnetic fields in the reversal of polarity of the current in a sufficiently pre-magnetised iron core, demodulations and modulations can also be effected with such mass cores. Therefore, such a mass core with corresponding windings and pre-magnetising coil etc., may also act as a demodulator in receiving circuits and thus fulfil the function of detector tubes. Since, for instance, in heterodyne receivers, two tubes acting as detectors are required then in such a case by means of the use of suitable coil or transformers, two tubes may be replaced by a mass core. This constitutes a considerable simplification. In order to replace the first tube, such an arrangement would have to act both as a modulator and demodulator, but in the second case, for the conversion of the intermediate frequency into the low frequency merely as a demodulator. Another tube is definitely required for the local generation of oscillations in heterodyne reception. Since, however, for the generation of oscillations work can be done on the straight part of the characteristic of a tube, then a low-frequency tube, preferably the output tube, in reflex connection, may be used for the generation of oscillations since in this case, owing to the great flexibility of control complications should least be expected. If the reflex system is also used elsewhere in such receivers, heterodyne receivers may be constructed with very few members. Since the tuning in such receivers can also be obtained by varying the effective inductance in accordance with the aspects given above, a receiver may be designed of a simplicity hitherto not known.

For the remote operation of receivers, it is important that the change-over of the individual wave bands should be effected with the same current as effects the variation in tuning. This can be effected in a simple manner by interrupting and reinserting the current employed for varying the inductance or for volume control, the interruption and re-insertion electro-magnetically setting into motion in the receiver an escapement wheel which sets a wave-band changing shaft into rotation. Since, as above described the actual tuning circuit may be completely decoupled from the circuit effecting the preliminary magnetisation it is immaterial in which direction the preliminary magnetisation current flows. By means of a polarised driving mechanism for the escapement wheel the latter may be rotated, for instance, clock-wise, on the passage of a current in one direction, while on reversal of the direction of the current the escapement wheel is moved in the anti-clockwise direction as the circuit is broken and remade. Therefore, by means of a suitable commutator switch arrangement in the remote controlling apparatus in cooperation

with the escapement wheel mechanism described, it is possible to effect rotation of the wave band change-over switch in the actual receiving apparatus in either direction from the remote controlling apparatus.

Since, the direct current component of the anode current in the demodulation devices owing to the selectivity of the receiving circuits, varies with variation of the tuning when a given transmitter is being received, this current variation may also be employed for the subsequent automatic correction of the tuning, since the direct current component of the anode current can then be used to vary the preliminary magnetisation to effect correction of the tuning circuits. Hence, it is possible in this manner to construct automatic self-tuning apparatus, or apparatus which, once tuning is effected, automatically adapt themselves to variations of frequency of the oscillations received.

Since the inductances provided with mass cores herein described may be used to replace modulation tubes, they also can be used in arrangements made in accordance with a prior invention of the present applicant to replace discharge tubes by inductance coils or transformers. In the arrangement for multiplex telegraphy according to the prior invention use is made of two parallel tubes, the grids of which are energised in opposite phase by a local oscillation. These tubes can be replaced by corresponding transformers of the type herein described. In the prior arrangement relays are shown connected in the anode circuit of the tube. These can now be dispensed with, since the mass cores of the said transformers may themselves be designed as relays and so permit conversion of the oscillatory energy into mechanical energy directly. The arrangement according to the prior invention may also be used for the analysis of frequency mixtures, by applying a control frequency variable in accordance with a well-known law to the control grids, whereupon a pointer or the like connected to the relay armature employed therein gives a strong deflection when the control frequency conforms with the frequency of a component of the current mixture supplies to the anode circuit, by application of the principle herein discussed, the tubes may be replaced by mass cores provided with a suitable winding and an instrument can therefore be constructed which acts directly as frequency analyser without the aid of discharge tubes, if a known variable auxiliary frequency is supplied. The different constructional examples indicated in the above application can be combined among themselves, so that an extremely large number of possibilities of use is obtained.

A further application of the invention relates to heterodyne receivers and more particularly those which are constructed in accordance with British Patents Nos: 301,498 and 313,414, wherein an aperiodic input or, at least, an input which acts aperiodically over a part of the receiving range is employed as far as the mixing tube, this aspect of the invention however, being in no way limited to those special types of receivers. In such receivers, one of the most important drawbacks is the strong crackling often complained of, which arises from the mixing tube and is then amplified to large amplitudes by the subsequent, usually powerful, intermediate frequency amplification. This amplification following the frequency changer was previously desired when difficulties still existed in the amplification of short waves. At the present day, these difficulties are obviated to a great extent, and it is therefore now proposed to arrange the entire amplification before the mixing tube whereby the noises arising in the mixing tube can be rendered small in relation to the receiving oscillations which reach this tube already fully amplified: In this case, of course, it is immaterial whether the amplification is effected by discharge tubes or by a back-coupling effect.

In addition to the suppression of the crackling tendency, however, other considerable advantages are also obtained by means of this arrangement. For instance, a finer anode rectification can easily be used, since the amplitude of the receiving oscillations applied to the control grid of the mixing tube after amplification can in any case be made so large that work is no longer done on the changing curvature at the lower bend of the characteristic, but the half-waves to be rectified extend into the straight part of the characteristic, so that a linear instead of an exponential action results, which is desirable for many cases. However, it is also advantageous in this receiver to employ the recent mixing arrangements employing pentagrid or hexode tubes such as described in British Patent No: 409,756, with multiplicative instead of the additive or subtractive intermediate frequency formation. Since, in accordance with the present proposal it is important to avoid any considerable amplification after the mixing tube, it is also desirable to avoid subsequent powerful low-frequency amplification. It may therefore be preferable to apply the output from the rectifier directly to the loud-speaker or even, as described above to dispense with all low-frequency parts and allow the high frequency to act directly on an electrostatic or electromagnetic high frequency loud-speaker (provided, for instance, with Ferrocart-like mass cores. Between the rectifier or high-frequency loud-speaker and the mixing tube in place of the usual intermediate frequency amplifier, merely an intermediate frequency filter chiefly comprising several members should be arranged, which may be constructed in a manner well-known per se as a chain conductor or may comprise mechanical resonators such as quartz crystals.

Particularly if, aperiodic or semi-aperiodic input circuits are employed as suggested above, it is desirable to use for the amplification effected before the mixing tube, tubes or combinations thereof according to British Patent No. 415,079, since these tube combinations provide very high amplifications in combination with relatively low internal tube resistances. This is an important point in aperiodic or semi-aperiodic amplifiers owing to the relatively low dynamic resistances which may be given to such circuits for the adaptation thereof to the tube resistances. As has been mentioned in the last mentioned patent, in the case of high-frequency amplification, such series connected tubes must be arranged so that the capacity of the connecting leads of the successive systems, is as low as possible, and to this end tubes with indirectly heated cathodes, which eliminate the capacity of the heating current source, and multiple tubes, which keep the capacity of the connections between the individual systems low, are employed. If several systems are used in this manner, the construction of a multiple tube may become rather complicated and thereby give rise to a large quantity of waste. In this case therefore, instead of com-

bining the whole in a single multiple tube, it is desirable to provide each system or small group of systems in a separate tube, but to construct the individual tubes so that they can be connected one to another with supply leads led out directly instead of through a base, so that in practice, the advantages of the short direct connections provided in multiple-tubes are obtained but in manufacture the advantages of the production of single or two-system tubes exist, the tubes being combined at all into multiple-system units.

Since, when using a comparatively large number of series-connected systems, very high voltage amplification is obtained and also since an anode current source, i. e. say, the mains-transformer etc., is designed for operation on high voltage and relatively small current, this type of apparatus is particularly suitable for combination with electrostatic loud-speakers.

In these methods of reception with aperiodic or semi-aperiodic input circuits, there is the advantage already emphasised in the prior patents referred to that single-knob manipulation is thereby obtainable in a very simple manner. It is very desirable for the constitution of these circuits to use coils with ferromagnetic cores at least for the construction of the multi-element filters in order to avoid stray fields and in consequence undesirable couplings, and if this is done it is possible to go a step further and, by the use of an adjustable preliminary magnetisation to use these ferromagnetic cores in the manner above described in place of rotary condensers, for tuning in to various waves to be received. The difficulties with this method of tuning, i. e. by preliminary magnetisation, in the case of a plurality of tuned circuits arise from the necessity of keeping the individual circuits in resonance over the entire receiving range, and these difficulties are avoided here, since when using aperiodic input circuits, only one continuously variable tuning means is provided and when using semi-aperiodic input circuits, the necessity of observing absolute accuracy of the tuning between the individual circuits is dispensed with.

The necessity for accuracy of tuning can be still further reduced in the latter case by dividing the total wave range into a large number of small ranges according to British Patent No. 409,737. In particular, if several simultaneously tunable circuits with variable permeability tuning are provided, this is of advantage. With this type of tuning ,which is particularly suitable for the remote control tuning of apparatus, the design of the tuning scales at the receiving apparatus or at the individual remote-operating place can then also be very conveniently designed. Since in this method of tuning, as already described in British Patent No. 409,737 the delicate mechanical adjustment is replaced by a form of electrical vernier, a very simple mechanical equipment is sufficient at the individual remote-operating places.

The tuning scales are preferably constructed as "panel scales". At the front of the receiving or remote control apparatus there is provided a plate of, for instance, opal glass of suitable dimensions (say 10 by 20 cms) which is divided into horizontal and vertical strips. If the plate is placed crosswise, strips are obtained which owing to their elongated form, are of suitable shapes for the inscription of station names. Each column then corresponds to one of the relatively small wave bands and the individual strips constituting a column correspond to the individual stations to be received within this band. The scale may be illuminated from the rear and there may be arranged on the apparatus as a wave switch, a plane sliding switch, the switching arm of which is movable behind the scale in such a manner that when connection is made for the reception of the shortest wave band, it is situated just behind the horizontal row which corresponds to the shortest band and, when the wave band connection is changed it comes into the corresponding position behind the wave band now switched in. If a small lamp is fixed to the switching arm, the range switched in at any time is always illuminated. By means of the knob effecting the tuning within a selected range, the lamp may then be moved to and from in a vertical direction behind the scale plate on a runner or the like, so that the strip bearing the name of the station being received is then illuminated. Alternatively a long horizontal pointer may be provided which moves in front of or behind the scale and which indicates the station in the column illuminated at the time, to which the apparatus is tuned. Such a panel scale, as will be hereinafter described can also be suitably constructed for use at a remote-controlling post.

Remote tone control by the variable induction of pre-saturated low-frequency chokes or transformers may also be employed.

The remote tuning mechanisms herein described are, of course, not limited to the provision of a panel scale as herein described any more than the panel scale is limited to this manner of application, since it is suitable generally on sub-division into a larger number of individual ranges, particularly in the arrangements according to the prior British patent No. 409,737 above mentioned. The methods of execution of the limited tuning or operation herein described are not only applicable to the special methods of reception described here and in the last mentioned patent although they are particularly suitable therefor.

The method according to the invention, can be used with very great advantage for yet another element in the tuning of a set, namely, not for operation of a continuously variable tuning element i. e. for replacement of the rotary condensers, but may also be used to replace the step-by-step tuning of an inductance by wave change switches. In this case, special advantages are obtained. As is well-known, it is a great disadvantage of all apparatus working with a wave change that change-over switch contacts must be provided in the high-frequency circuits, since, firstly, the connection of the lines from and to the contacts causes difficulties, since all capacitative effects in such circuits are to be avoided to the greatest possible extent. In addition, the lines to the change-over switches and the change-over switch contacts give rise to additional dampings, apart from the undesired capacitative couplings, and finally also the mechanical structure of these multiple switches is complicated and expensive.

All this can be avoided by the step-by-step switching or pre-magnetising currents, which offers great advantages, in particular, when a large number of changes of connection is to be effected, such as, for instance, in an apparatus constructed according to British patent No. 409,737.

All tunings effected by saturation such as hereinbefore mentioned and more particularly, those just discussed permit in other respects the use

of much higher permeabilities than, for instance, are obtained with the Ferrocart-like materials wherein during operation, the inductance value remains unchanged. This is due to the fact that in the case of the materials the permeability of which remains unchanged, the permeabilities must be so chosen, that even at the smallest wave length arising, the damping is not too great, whereas in carrying out the present invention, the permeability is so chosen that in the condition of the maximum preliminary magnetisation, the permeability is a minimum, the damping is kept within the desired normal limits for the smallest wave lengths, while in the case of higher wave lengths at which a higher permeability does not bring any objectionable increase in damping, this increased permeability can then also be effectively utilised. This applies particularly to the step-by-step inductance switching here described, since here the maximum permeability comes into action at wave lengths which behave particularly favourably as regards the damping with ferromagnetic cores.

The step-by-step tuning by varying the current intensity or voltage of a pre-magnetising current in steps may even be used in the case, owing to its special advantages, in arrangements which are otherwise normally tuned, that is tuned by rotary condensers or variometers or in combination with the methods of tuning hereinbefore described, so that the step-by-step and also continuous tuning can then be effected by the same or even different preliminary magnetisation coils on the same or on different cores.

It is also very suitable, particularly for remote tuning, however, to combine the continuous tuning (described above) with a step-by-step tuning by variable preliminary magnetisation by means of electric biasing of condensers, for instance Seignette salt condensers, for the purpose of remote operation of receiving installations having several tuning circuits by a single-knob.

In particular, for such cases in which a high degree of curvature of the magnetisation curve is desired in addition to a high degree of variation of the permeability at the working point, that is, especially in those cases where a modulation phenomenon is desired, there is a certain drawback, with cores such as Ferrocart cores, having a fine subdivision in the distribution of direction of the lines of force, the magnetisation curve presents only slight curvatures. According to a feature of the present invention therefore, a magnetic core is provided which is hereinafter described, and which has proved to be particularly suitable in such cases, and also in all the other cases which are mentioned in this application.

Since very sharp bands can be obtained in the magnetisation curve even with relatively small magnetomotive forces, if the ferromagnetic material is suitably chosen, this material is also particularly suitable for the construction of magnetic amplifiers which operate on the principles well-known per se, such amplifiers could only be constructed for relatively low frequencies in the past, owing to the high iron losses.

In order that the various aspects of the invention may be more clearly understood, a number of embodiments thereof will now be described with reference to the accompanying drawings in which

Fig. 1 shows a simple volume control arrangement,

Fig. 2 shows a modified form of volume control arrangement similar to that shown in Fig. 1,

Fig. 3 shows an arrangement for obtaining automatic volume control,

Fig. 4 is still another form of volume control,

Fig. 5 is a section of a form of core suitable for use in carrying into effect the various features of the invention,

Fig. 6 is an elevation,

Fig. 7 shows an arrangement for effecting step-by-step alteration of an inductance,

Fig. 8 shows diagrammatically the circuit arrangement of a superheterodyne radio receiver embodying a feature of the invention,

Fig. 9 shows a tuning indicator arrangement and remote controlling apparatus for use in conjunction with the invention,

Fig. 10 is a remote control circuit which may be employed, according to the invention, in conjunction with the other remote control arrangements described,

Fig. 11 shows a reactor having the high frequency core arranged between the poles of an energising magnet,

Fig. 12 shows the invention applied to capacitative tuning,

Fig. 13 shows a modification of Fig. 12,

Fig. 14 shows a circuit for obtaining automatic tuning control,

Fig. 15 shows a more detailed circuit for obtaining automatic tuning,

Fig. 16 shows another circuit for obtaining automatic tuning,

Fig. 17 shows a modification of Fig. 16 in which the automatic tuning is effected by means of a variable capacity,

Fig. 18 shows a push-button remote control circuit,

Fig. 19 shows a remote control circuit with a sub-divided wave range,

Fig. 20 shows the lay-out of a control panel.

Referring first to Fig. 1, which shows a volume control arrangement a tube 1 is shown adapted to operate, for instance as an anode current rectifier, so that an increased amplitude at the grid, produces an increase in the anode direct current component. An oscillatory circuit 2 is connected to the grid of the tube. The anode circuit of the tube is provided with a back-coupling coil 3 and a variable leak condenser 4. According to the invention, the back-coupling coil is coupled to the oscillatory circuit through a ferromagnetic core 5, the inductance of the ferro-magnetic core being of such a value that favourable operation of the back-coupling is just obtained with the preliminary direct current magnetisation due to the anode current which passes at the desired volume. The adjustment of such a close back-coupling is effected by means of a variable condenser 4. If the capacity of the condenser 4 is made very large the high frequency component is mainly conducted to the cathode without traversing the coil 3 and a slight back-coupling action takes place, while on the other hand, if the capacity is reduced, the back-coupling effect increases. If strong signals are now received, which cause a substantial increase in th anode current, the action of the back-coupling decreases accordingly since the increased preliminary magnetisation reduces the mutual inductance of the coil 2 and 3. The reverse action may also take place. In this case, therefore, a very simple type of volume control is obtained. Any re-tuning of the circuit 2 which occurs may be compensated in any suitable manner if it is undesirable, although as stated above, additional volume control may be ob-

tained thereby. Any desired adjustment of the time constant of the regulating operation can be obtained by condensers and resistances or the like, suitably incorporated in the anode circuit.

In Fig. 2 a modification of regulating device for the regulation of back-coupling is illustrated, which has an even more intense action to some extent. In this case, a three-limb core of ferromagnetic material is provided, which carries three different coils or groups of coils. The coils 1, 2 are connected in a tunable oscillatory circuit, which as in the Fig. 1 arrangement, may be connected to a tube acting as rectifier. These two coils are wound in such a manner that the field they generate in the coil core are in series. The field produced by them, therefore, does not substantially penetrate the centre limb of the transformer. On the centre limb of the core there is arranged a coil which is traversed by the high-frequency components of the anode current of any succeeding high-frequency amplifier or the detector tube to which the oscillatory circuit 1, 2 may be connected. As long as the inductance in the two symmetrical portions of the three-limb transformer I and II is uniform, no back-coupling effect will occur at all, since the oscillatory circuit is decoupled from the back-coupling coil in this condition. The core of ferromagnetic material or the oscillatory circuit coil may be so designed that complete mutual decoupling occurs when a certain normal current flows through the turns 3, 4 connected in opposition to one another which are traversed by the direct current component of the de-modulation tube. If the volume falls below this desired degree, then the consequent reduction in the preliminary magnetisation by the two coils, 3, 4 unbalances the symmetry in the two magnetic circuits I, II so that coupling takes place between the oscillatory circuit 1, 2 and the back-coupling coil, such coupling being intended to act in such a manner that the back-coupling has an amplifying action. If, however, the field strength of the incoming oscillations becomes very great, so that the anode current in the rectifier tube considerably increases, the symmetry of the arrangement is displaced in the opposite direction and the back-coupling coil now acts as additional damping, that is reduces the volume. For this effect to be produced, of course, it is necessary that initially, that is without the action of the coils 3, 4 asymmetry exists between the circuits 1, 2 so that a close back-coupling is then already present, this asymmetry being gradually removed as the direct current in the coils 3, 4 increases, extending increase in the current in the coils 3, 4 leading to asymmetry in the opposite direction. The arrangement just described owing to mutual compensation of the action in the coils 1, 2 provides automatic volume control without any variation of the tuning. A third example of an arrangement providing automatic volume control is shown in Fig. 3. In this case, the coupling per se is varied in place of the back-coupling. I is, in this case, the input circuit of a coupling arrangement, while II is the output circuit. The arrangement may be a transformer coupling two high-frequency amplifier stages or the like. As can be seen, the transformer has 3 groups of windings, namely, a coil 1 which is connected to the input circuit, a centre-tapped coil 2 from which the output circuit is so derived that, if the coil is tapped symmetrically no oscillatory energy can reach the input circuit and, furthermore, a second two part winding 3, 4 through which the direct current component of the demodulation tube flows. In this case also the tapping of the coil 2 may again be made asymmetrical at the outset or the mass core may be asymmetrically designed or both, so that normally, without direct current in the windings 3, 4 or with only a small direct current component, a considerable asymmetry is present, whereby an essential part of the input at I may be derived at II, while as the preliminary magnetisation by the coils 3, 4 increases the asymmetry is gradually removed and finally the bridge or the differential system, on very strong preliminary magnetisation, gradually approaches balance, so that the current component which is transferred from I to II continuously diminishes.

If the coils 1 and 2 are parts of tuned coupling transformers between individual amplifier stages, where the detuning may be undesirable, this de-tuning may be counterbalanced as has already been described in connection with the example shown in Fig. 2 by the counterconnection of similar elements so that no undesired de-tuning of the circuit then occurs.

The great advantage of such volume control arrangement resides in the fact that although no special tubes and no special grids in the tubes are employed, a variation of the volume can be obtained which, in multi-stage apparatus, such as multi-stage amplifiers, where a regulating stage may be arranged before each amplifying tube, multiplies the action in the individual tubes, and so allows of obtaining regulation within very wide limits. In the arrangement described in Fig. 3 wherein the preliminary magnetisation only acts to vary the energy transmitted from circuit I to circuit II it is also possible since there are no tuning problems in this case to effect the regulation in the low-frequency part or else in the high-frequency and low-frequency part together. If the regulation is effected in the low-frequency part, it is possible to dispense with the use of special types of iron.

A further development of the invention idea is shown in Fig. 4. In this case, I is against the input circuit of a coupling arrangement which is variable for the purpose of volume control and II the output circuit. 1 and 2 are normal fixed inductance coils, while 3 and 4 represent two inductances variable by preliminary magnetisation. The bridge arrangement comprising the four resistances 1, 2, 3, 4 is initially balanced, that is, when only the preliminary direct current magnetisation by the battery 5 is effective in the coils 3, 4 and there is no preliminary magnetisation by the centre tapped coils 6 and 7, then the bridge is in equilibrium. If preliminary magnetisation arises in the coils 6 and 7 the equilibrium of the bridge is disturbed, since the inductance of the coil on the core 3 is increased and the inductance in the coil 4 is decreased to equal extents. A considerable flow of current will then take place in the arrangement from the input part I to the output part II. The preliminary magnetisation of the cores 3 and 4 is effected in the following manner. The two tubes 8 and 9 again represent rectifiers, which are energised by an oscillatory circuit 10, which may be assumed to be connected to the output of a high frequency amplifier. The circuits I and II may be the coupling between two or more stages within this high-frequency amplifier. The tubes 8 and 9 then act as rectifiers and in the present figures, for the sake of clearness, the part of the lines which leads to the low-frequency amplifier is omitted and only that part of the lines of the an-

ode circuit of the tubes 8 and 9 is shown, which carries direct current. In this case, means not shown, may also be provided which effect the filtering of the alternating current component.

The two tubes 8 and 9 are intended to work with somewhat different biases, e. g. tube 8 with normal negative bias, so that it acts as a normal anode rectifier tube, and the tube 9 with so great a negative bias that the tube begins to function only at considerable amplitudes. When signals of very low intensity are received, so that it is to be feared that the material part of the audion only comprises strongly reproduced disturbances, then owing to the small anode direct current of the tube 8 and the tube 9 in the coils 6 and 7, no appreciable direct current at all will flow, so that the original equilibrium of the bridge is not disturbed and practically no output is transmitted from I to II, that is, not even the intense disturbing noises, which are otherwise always present as a disturbing factor in a sensitive receiver on adjustment to maximum volume. If signals of a moderate sound intensity occur, the anode direct current of the tube 8 increases and, hence an increasing magnetisation is produced in a half of each of the coils 6 and 7, which as has already been mentioned, act in the opposite sense on the cores 3 and 4 so that in one core the preliminary magnetisation proceeding from the battery 5 is increased and in the other, it is decreased. Thus the equilibrium of the bridge is disturbed and a good transmission of the energy from the input circuit from I and II is effected. If the signal intensity considerably increases the tube 9 will also come into action, so that if the signal amplitude becomes greater than the negative bias of the tube 9, this tube then also passes an anode direct current. Hence anode current is now supplied to coils 6 and 7 from both tubes 8 and 9. Since the two halves of the coils 6 and 7 act in opposition to one another, however, simultaneous operation of the tubes 8 and 9 acts to remove the preliminary magnetisation in the coils 6 and 7 and the bridge is again balanced so that the amount of energy which is supplied from the input circuit I to the output circuit II is kept constant.

Here again therefore an arrangement is provided, wherein automatic volume control and automatic noise suppression is provided. The coil combination shown here can also be arranged in several stages of a multi-stage high-frequency amplifier or even a low-frequency amplifier, so that regulation within very wide limits can take place. In this case, it is noteworthy that the input circuit I can be tuned, since the total inductance of this circuit (if no considerable load is applied to circuit II, that is, for instance, only the input of a tube amplifier) does not vary. The total inductance consists of two part-inductances connected in parallel, i. e. the part-inductance of the coil in series connection with the iron-core coil 3 and, the part inductance of the coil 2 in series with the iron core inductance 4. Since, however, in the regulating operation, the inductances of the coils 3 and 4 are varied in opposite sense, then provided this variation takes place to some extent in a linear manner, as may be obtained within wide limits of time by a suitable coil and core arrangement for instance, conical iron cores or the like may be used, the total inductance will not vary during the regulating operation, so that these coils may be parts of a tuning circuit.

Referring now to Fig. 8 this shows a superheterodyne radio receiver constructed according to a feature of the invention. As is readily apparent from the drawing, the apparatus comprises two stages of series connected amplifier tubes, each comprising two tubes 21, 22 and 23, 24 connected in the manner according to British Patent No. 415,079 the two stages are coupled through a band-pass tuned circuit 25. The output of the two stages of high frequency amplification is applied through a further band-pass tuned circuit 16 to the mixer tube 27 shown as a hexode or four-grid tube. The intermediate frequency from the mixer tube 27 is applied by way of transformer 28 and filter 29 to a second detector 30 in the anode circuit of which the loudspeaker L is connected.

The high-frequency signals picked up by the aerial 31 are amplified in the two stages of high frequency amplification to such an extent that, after frequency changing by the tube 27 and detection by the tube 30, a sufficient output is derived to drive the loudspeaker L without low-frequency amplification.

Preferably, the tuning arrangements are constructed according to British Patent No. 409,737, whereby the condensers forming part of the coupling circuits 25 and 26 and the tuning condenser for the local oscillation generating circuit 32 may all be ganged together without difficulty and may even be condensers of the solid dielectric type.

In Fig. 9 a further development of the invention is shown. In this figure, T is an instrument which is traversed by the pre-magnetising current and indicates its strength. However, since this current is proportional to the receiving frequency, the instrument can be directly calibrated in wave-lengths. By means of a second lever pivoted at D, a parallel ruler mechanism is formed whereby the long pointer Z may be maintained horizontal and guided up and down in front of or behind a panel scale divided, for example into five parts. Connected in series with the instrument T is a regulating resistance R, which enables the intensity of the pre-magnetising current and thus the tuning of the receiving apparatus to be effected. The resistance R is operated by a knob K which is mounted on a long spindle, which may be of square or other cross-section so that on rotation of the knob, the contact arm of the resistance regulator R is turned, but on movement of the knob in the direction of the spindle, the latter may slide freely.

The spindle A may therefore be used to displace the contact Y on the slide S by push or pull, so that it can be brought into engagement successively with the contacts 1 to 6. This contacting causes circuit interruptions or closures which cause the rotation of an escapement wheel in the receiving apparatus in the manner described above, said wheel causing the wave range change-over in the apparatus.

In this case, pressure on the knob K in the axial direction, moves the member M sliding frictionally on the spindle to effect a contact closure between the elements of the controlling apparatus and the lead U, while a pull on knob K, moves the member M in the reverse direction and makes contact between these elements and the lead V. The individual current impulses produced by contact of the contact Y with the individual contact points cause rotation of the escapement wheel effecting the wave range change in the apparatus in either one or the other direction, according to whether the impulses are transmit-

ted to the receiving apparatus through the lead U or V, since the two lines U and V are connected either to different lifting magnets or drive a polarised escapement wheel mechanism in either direction. The result is thus obtained that the position of the escapement wheel corresponds at any time to the position of the contact Y.

On the contact Y there is arranged a small lamp L*a* which illuminates the area below which the contact for the time being in operation is located. The arrangement is preferably so devised that by means of vertical screens or the like, the adjacent fields are prevented from being noticeably illuminated, only the one area, corresponding to the wave band in use being illustrated, and the shadow of the long transverse pointer Z being seen on the opal glass or like plate only at that locality. The sixth contact point is shown in the present constructional example as an idle contact, so that by shifting the knob K into its end position, the apparatus can be switched off by interrupting the current interruption. It is preferable to ensure, by means of resilient stops or the like that the contact cannot remain in an intermediate position between two contact points. Furthermore, a change-over to gramophone reproduction, for instance, at the receiving apparatus may be distinguished at the remote-control apparatus by reversal of the direction of the current or the like or by means of a special signalling lamp or by deflection of the instrument in the opposite direction, whereby the pointer is moved out of the range of the tuning scale and replaced by a template with an inscription which is depicted on the scale.

If remote control is to be effected from more than one point, the remote control line may be permanently connected up to the several points (if a movable wire is not employed) and plug connections may be provided at these points into which a remote control apparatus of the above-described kind can be plugged. It is then only necessary, for instance in a dwelling-house with several living rooms from which the operation is to be effected at will, to carry about the small and light remote-control apparatus to the room from which control is desired. Alternatively a remote control apparatus may be permanently installed at each point which shows on permanently connected ammeters or voltmeters, which are calibrated in wavelengths in the above described manner, the wavelength adjusted at the time from that or another place. In the latter case, however, it is preferable to provide a locking arrangement, whereby an adjustment cannot be made from one point if the apparatus is already being controlled from another point, since otherwise the escapement wheel mechanism in the apparatus might fall out of step. The connection and disconnection of the apparatus, however can be effected in this case from any number of points by means of a circuit similar to the "series circuit" in lighting installations.

The individual operating points can be made more dependent of one another by the following arrangement. Means such as a holding magnet as used in the selectors for automatic telephones may be provided arranged on a device which may resemble the above-described remote control, which holding magnet, retains the knob K by means of a braking action of a pawl and stops, in each position into which it is placed by means of the adjuster, in opposition to a restoring force formed e. g. by two springs. If the current is interrupted, the holding magnet or the holding magnets become currentless and the two springs i. e. a torsion spring and a lifting spring acting as restoring forces, rotate the resistance R into its zero position or initial position in which the circuit is broken, and move the contact Y into the idle contact 6. Since, by the use of a "series circuit" as in illuminating installations, the current interruption can take place at any operating point, this provides a possibility of effecting the operation at each point independently.

In this case, as described above, the reading instruments may remain connected at each point if desired, in order that the station to which the apparatus is adjusted may be observed at each point. If several wave bands are employed, a device must also be provided to indicate the particular wave band. This could be effected, for instance, by the arrangement of a separate signalling lamp under each scale section corresponding to a wave band, the lamps corresponding to each section being connected in series or in some other interconnection with the corresponding lamps at the other operating points. Loudspeakers may be permanently installed at the individual operating points or may be plugged in, in the same manner as the remote control apparatus. Alternatively a loudspeaker may be incorporated in the transportable control apparatus. When the apparatus is to be employed as a gramophone connection the changing of discs will necessitate providing the sound pick-up at the remote points, and talking machine connections may therefore be provided at these remote controlling points, in which case care should be taken in the manner described above that the use of the apparatus for the time being as a talking machine is indicated at the other operating points.

The method of remote control above described, is not, of course, confined to its use for living rooms but may be used also when for any constructional reasons, the apparatus to be operated must be arranged at a place, which is inaccessible to the operator, thus, for instance, on automobiles, aircraft, boats and the like.

In such cases also it may happen that the operation is to be effected either from the pilot's or driver's seat, or alternatively from the back seats, in which case at least two independent operating posts may be effected in the manner already described or else by connecting all the lines concerned to each operating post as in a house telephone line-selector.

A further possible arrangement for independent operating posts is shown diagrammatically in Figure 10 by way of example. In this figure two such posts, are shown, in an installation such as for a motor-car wherein the apparatus is to be controlled from the back seats or from the driver's seat alternatively. The principle of the arrangement consists in using resistance branches, wherein by adjustment of regulating resistances, potentiometers or the like at different controlling posts, voltages or current intensities for the preliminary magnetisation may be derived. By this arrangement adjustment at one controlling post need not be varied or brought into the condition of rest before another controlling post can be employed, this result being achieved by the fact that the current consumers of the regulating resistances or the like which are provided at the various controlling posts are connected in a common circuit. Referring to Fig. 10 B is the current source required for obtaining the preliminary magnetisation, for instance the bat-

tery of the motor-car. The pre-magnetising winding in the apparatus, should be so arranged that the whole wave band for the time being connected up may be covered by variation of the voltage from zero up to half the available battery voltage. In other respects the windings may be constructed in all respects in accordance with the information set out above. The voltage applied to the pre-magnetising windings may be read off at either of the two controlling posts I and II from a voltmeter V1 or V2 calibrated in wave lengths or frequencies or station names, permanently connected in circuit. In the position shown, the sliders of the two regulator tappings R1 and R2 are approximately at the centres of their corresponding resistance strips. In this position they both have the same potential and zero voltage is therefore applied across the winding S connected between them. The longest wave is therfore tuned in. If one slider R is moved out of its position of rest, then independently of the position of the other slider, at least half the battery voltage may be applied to the winding S. The fact that, in this arrangement the direction of current may change is immaterial for the effect, since the winding S is completely decoupled. However, it is necessary to use voltmeters V, which give the same pointer deflection whichever the direction of the current, unless opposite deflections are expressly desired for special purpose. The wave range change, however, cannot be effected by means of change of direction of current and polarised escapement wheel mechanism, but must be effected in some other manner, such as has been described above. The connection and disconnection may also be effected independently of one another at the control posts by "series-connection". Very often, a volume adjustment is required which may also be effected in the manner described above by means of saturating windings or in the same way as the tuning by electrostatic biasing of condensers dependent on voltage (for instance, Seignette salt dielectric condensers).

Turning now to Figure 7 this figure shows by way of example an embodiment of a further feature of the invention according to which the step-by-step variation of an inductance is effected by step-by-step variation of the preliminary magnetisation applied to a core with which said inductance is provided. In this figure, B is the current source, employed for preliminary magnetisation, which is shown here as a battery but which in most cases will be replaced by a connection to the mains. R is a resistance variable in steps, which however, if continuous tuning by saturation is to be obtained in addition may also have a continuously variable regulator connected in series therewith. Alternatively the resistance R may be continuously variable between the steps, and may be provided with stops, so that sub-division into several separate wave bands, even with a large tuning range of an apparatus, for instance from 200 to 2000 metres or more, is then dispensed with. K is the ferromagnetic core which carries the relatively de-coupled premagnetising and oscillatory circuit windings. Further oscillatory circuits or back-coupling circuits of the apparatus, not shown here for the sake of simplicity are connected to the terminals X. Finally, Z is an additional resistance regulating arrangement the value of which may be adjusted to balance the initial values pre-magnetisation of the individual cores against one another. If the pre-magnetising windings of the cores are connected in parallel and not in series as shown here, the additional resistances Z should not be arranged in parallel but in series with the pre-magnetising turns.

Figs. 5 and 6 show diagrammatically a form of core particularly suited to the various purposes of the present invention. Referring to these figures 11 is a coil body of thick pasteboard or other insulating material, which serves not only as a former for the coil, but also to ensure that the winding on the core is sufficiently spaced from the conductive core material, at least, where it is desired to provide a high-frequency winding disturbing capacity couplings through the core material are to a great extent avoided. The coil former, which is shown homogeneous in the drawing may also be in the form of a framework structure, so that the H. F. turns touch the insulating material only at a small number of points, a sufficient air spacing for the reduction of capacitative noises being provided elsewhere. Since the finished core in the form herein described forms a self supporting whole, the insulating former can therefore be mechanically relieved to a great extent.

On the coil former there is wound a layer of thin ferromagnetic wire, for instance, iron wire or better an alloy such as permalloy, in such a manner that a small air space is left between the individual turns, which considerably reduces capacity coupling between the individual wire turns. The thickness of the wire should not greatly exceed a diameter of 0.03 mm. thinner wires being still better.

After a layer of wire has been applied in the manner described, leaving sufficient spacings between the individual wires, this layer is preferably fixed and coated by a lacquer of good insulating qualities and of the lowest possible dielectric constant. Following this is an insulating layer, such for instance as paper, which is also fixed and then again, in the same manner as has just been described, another layer of wire or strip is applied. The wire or strip may possibly be produced electrolytically by deposition on a conductor base which is then dissolved away.

In the drawing 12 denotes the intermediate paper layer, and 13 the individual wires; 14 shows the arrangement of a layer of the H. F. coil winding. Since the core, as mentioned above, has sufficient mechanical stability after hardening of the lacquer, a direct current winding which is necessary for obtaining a preliminary magnetisation may be wound directly on the core. Hence, at the point where the direct current winding is arranged, the coil former is preferably removed since no reduction of the capacitative coupling is required, and a highly desirable gain in winding space is obtained.

Owing to the relatively low iron or the like content of the core, the permeability of course becomes considerably less than in solid cores or cores normally made of laminated material, but this is desirable for high frequency purposes owing to the consequent reduction in iron losses to tolerable limits. Moreover, sufficient saturation can be obtained in the matter with less current.

If the preliminary magnetisation is of an additional permanent or electromagnet not produced by an applied winding but by arrangement of the core in the field, then of course by removing the insulating body at the particular points, provision should be made for good mag-

netic contact where the flux enters and leaves the core.

The cores described can be most simply produced economically in the form of closed circular rings since they can then be made on a simple coil winding machine with an arrangement well-known per se for the arrangement of intermediate paper layers between the turns, and it is therefore desirable to use two such cores for carrying out the various connection hereinbefore described. The direct current winding may then comprise two separate windings each arranged on a core, instead of the single winding illustrated in the figure. This last form of construction should even be the better one in regard to the attainment of a favourable filling factor.

The direct current winding and alternating current winding may generally be interchanged.

Referring to Fig. 11, the reactor comprises an electromagnet 41 which is energised by the energising winding 3. The magnet 41 is constructed of waterial of relatively high permeability, such as from iron laminations or solid iron. It may be made from material known commercially as "Permalloy."

Between the pole pieces of the magnet 41 is arranged an inductance 2 wound upon a ferromagnetic core 5 of low magnetic permeability. This inductance may be constructed as described with reference to Figs. 5 and 6. It is preferable to provide a good magnetic contact between the poles of the magnet and the core.

By varying the current flowing in the winding 3 the field strength between the poles of the magnet 41 is varied whereby the saturation of the core 5 may be varied and thus also the inductance of the coil 2. In this way the reactor provides a simple means of adjusting the inductance of the coil 2 to any desired value without any moving parts being necessary. The inductance 2 may form part of a high frequency oscillatory circuit of a radio receiver so that by means of the reactor according to this invention it is possible to effect the tuning of the circuit by merely varying the current flowing through the winding 3. This may be effected from the remote point by simple variation of a potentiometer as illustrated in Fig. 7.

It has furthermore been mentioned above that the statement made for inductive operations when using cores of ferromagnetic material may also be applied to capacitative operations when using condensers dependent on voltage. Suitably constructed Seignette salt condensers are particularly suitable as such condensers.

Fig. 12 shows an embodiment employing such a condenser, the circuit arrangement is substantially identical with that shown in Fig. 7 with the exception that the reactor 5 is replaced by the condenser 50 and the condenser 6 by the inductance 60. R is the resistance, which in this case is arranged as a potentiometer across the battery B, whereby the potential applied to the plates of the condenser 50 may be varied to vary the capacity of the oscillatory circuit comprising the condenser 50 and the inductance 60. The condenser 50 may be of the type which has a piezo-electric dielectric or in which the electrode spacing is a function of the potential difference therebetween.

Fig. 13 is a modification of Fig. 12. The condenser with plates 50, 51 has an inductance coil 53 connected across the plates, said condenser and coil forming an oscillatory circuit. The condenser is connected to a source of continuous current, for example a battery 56 through two choke coils 54, 55, and a resistance 57 capable of variation by means of a sliding contact 58 bridges the battery terminals. Variable voltages are thus available whereby variable potentials can be selectively applied to the two plates 50, 51 of the condenser, causing the capacity thereof to change with the result that the tuning of the oscillatory circuit 50, 51, 53 can be varied.

By deriving from a receiver a controlling potential dependent upon the frequency of the signals received or the variation of the frequency of the received signals, this controlling potential may be used for automatically tuning the oscillatory circuits of the receiver in the same manner as described above for automatic volume control whereby an automatic correction of the tuning to a desired frequency may be obtained. Since the direct current component of the anode current in demodulating devices, owing to the selectivity of the receiving circuits, varies with variation of the tuning when a given transmitter is being received, then this current variation may be employed for the purpose of automatic tuning. The direct current component of the anode current would be used to vary the preliminary magnetisation to effect correction of the tuning circuits. Any of the arrangements described above for automatically controlling the tuning in dependence upon a controlling current or potential may be used for this purpose. This possibility of automatic tuning correction is of particular advantage in the case of remotely controlled receivers which are particularly simple to construct with the arrangements according to the present invention.

When two tuned circuits are provided in the receiver one of the circuits may be provided with automatic tuning correction means whilst the other circuit may be provided merely with manual control means whereby the first circuit is kept in tune with the received signal independently of the variation of the second circuit, whereby accurate ganging between the two circuits may be dispensed with.

The principles employed for automatic tuning control will be explained with reference to Fig. 14 in which the incoming signals pass through the condenser 115 and the resistance 116. Shunted across the resistance is a rectifying device 117 which is in series with the magnetising winding 118 on the magnet 119. The preliminary magnetisation may be produced by a second winding 118[1] arranged on the magnet and fed with current from a battery 161. The energising current may be controlled by the resistance 162 which may be arranged at a remote point and serves manually to adjust the tuning to receive any desired station. Alternatively, the winding 118 may be the only winding on the magnet, and have both the automatic controlling current and the preliminary magnetising current passed through it. Arranged in the gap of the magnet 119 is the inductance coil 120 which forms part of an oscillatory circuit, for example the tuning circuit or the local oscillator circuit in a superheterodyne receiver.

It is known that if the frequency of the incoming signals increases, more energy passes the condenser 115 and thus more current is passed through the winding 118 on the magnet 119, thereby increasing the field and increasing the frequency to which the inductance 120 is tuned.

whereas if the frequency becomes lower, that is the wave length of the incoming signals increases, the reverse action takes place and the frequency to which the oscillatory circuit is tuned also decreases.

The circuit illustrated in Fig. 14 is given for the purpose of explanation and it is assumed that the incoming signals from different stations have the same energy. In practice, of course, the control would be effected through a device for producing equal amplification of the incoming signals, such as for example the last stage of an automatic volume control circuit, or a voltage or current limiting device should precede the amplifier.

Fig. 15 shows a more detailed diagram in which the output from the valve 121 passes through the condenser 122 and the resistance 123, the current in which varies with the frequency due to the variation in energy which passes through the condenser 121 with frequency changes. The current passing through this circuit is rectified by the rectifier 124 and fed to the magnetising winding 125 of the permanent magnet which automatically adjusts the tuning of the input or local oscillator circuit 126.

Fig. 16 shows an alternative circuit diagram for automatic tuning control in which the control is effected by balanced circuits. The principle is illustrated in the drawing as being applied to a superheterodyne receiver. The intermediate frequency signals are fed to the grid of the valve and the signals in the inductance 127 in the anode circuit oscillate at the same frequency. Coupled to this inductance are two tuned circuits I and II, the circuit I being tuned to a wavelength slightly below that which is to pass the intermediate frequency stage and the circuit II to a wavelength slightly above that to be passed. The outputs from these two circuits are fed through the rectifier 128, the cathode of which is connected to the mid-point of a winding 129 on the permanent magnet. The opposite ends of this winding 129 are respectively connected to the circuits I and II as shown. This winding 129 may be arranged on the magnet which has a second winding 130 which produces the field which may be varied to adjust the tuning to different transmitters. In the gap of this magnet is positioned the inductance which is in the local oscillator circuit 131.

The operation of the device is as follows.

If the intermediate frequency slightly increases the circuit I would be more energised than circuit II thus upsetting the balance in the inductance 129 and causing more current to pass through the half 129a than the half 129b, which thus has the effect of altering the local oscillator frequency to retune the circuit. On the contrary if the intermediate frequency becomes slightly lower the reverse effect takes place due to the circuit II being more strongly energised than circuit I.

Fig. 17 shows a modification of Fig. 16 in which the rectified output from the two circuits I and II is used to control the frequency of the local oscillator circuit by varying its capacity. To this end the outputs from the circuits I and II vary the potentials produced in resistances 132, 133, which are in circuit with the control electrodes 134 which adjust the capacity of the condenser 135 in accordance with the potential impressed upon those control electrodes. The battery 163 and potentiometer 164 serve for manually controlling the potential applied to the control electrodes 134, for the purpose of manually tuning the condenser 135 to receive any desired station. The arrangement shows the control electrodes quite independent of the condenser electrodes so that there is no coupling between the control circuit and the oscillator circuit. More broadly speaking the arrangement avoids coupling between the controlling and controlled circuits.

In one particular form of construction of the condenser, the dielectric may comprise a piezo-electric crystal having the two condenser plates arranged on opposite surfaces thereof. By applying a potential, which may be applied to electrodes separate from the condenser plates, the crystal may be deformed to vary the capacity between the two plates.

The methods of tuning by altering the inductance or capacity of an oscillatory circuit by varying an applied bias, lends itself particularly to the remote control of radio receivers by means of a series of push-buttons which are so connected to points on the controlling resistance or potentiometer that a desired station may be received by merely depressing the corresponding push-button. Such push-button receivers were first described by me in my U. S. Patent No. 1,969,209, patented 7th August 1934.

One such embodiment is shown in Fig. 18 in which the remote tuning or other tuning of a receiver E is effected by varying at the control panel a regulating resistance R which alters the pre-magnetising current of one or more magnetic variometers serving for the tuning of the circuits, then a press-button control may be achieved by providing, in addition to the slider S on the regulating resistance R for effecting continuous tuning, further adjustable sliders having connections leading to the individual press-buttons D_1—D_6.

By pressing in one of the press-buttons, the resistance corresponding to the setting of the slider will then be switched in, and the receiver tuned in to the station corresponding to the adjusted current or voltage. The advantage of this arrangement over ordinary press-button controls or press-button remote controls, resides in the fact that only one single conductor for the regulating current is required for an unlimited number of press-buttons and therefore of stations to which the set can be tuned. Furthermore, the possibility is provided of having a continuous change of wavelength available at the control panel in addition to a number of pre-selected stations. If there is provided a large number of permanently pre-selected stations, it is particularly expedient to provide stabilisers, voltage governors or the like for the sources of the regulating current.

If as tuning means there be employed devices which are substantially free of after-effects, no further complications of the arrangement are to be expected. This applies for example when valves are used as tuning elements, provided these valves serve as variable inductive or capacitative resistances. If tuning is effected with the aid of magnetic variometers, that is to say for instance by utilising saturation phenomena, or if mechanical driving means be employed, that is to say for instance driving means working on the principle of a voltmeter or ampere-meter, these means being adapted for instance to turn a rotary condenser to a greater or less extent in dependence on the adjustment of the regulating resistance, precautions must be taken to counteract these after-effects, such as coercive force or friction.

The outcome of these after-effects may be eliminated with the aid of any means by which an increase of the relative accuracy is achieved. For this purpose there is contemplated more particularly the sub-dividing of the total frequency band to be covered by the set into a large number of sections, as described, for example, in British patent specification No. 409,737.

Assuming, for example that a remote-tuned set of this kind, designed to be tuned with a pre-magnetisable self-inductance equipped with a ferro-magnetic core, that the normal broadcasting range of say 500 to 1500 kc/sec is to be covered, and assuming further that the registering error is reduced by the use of heavily alloyed transformer sheets to about 2 to 3%, then this means that at a medium frequency of the set range, that is to say, at about 1000 kc/sec, there will still be a difference of 20 to 30 kc/sec between the wave length to which a remote-controlled arrangement adjusted by means of a regulating device is supposed to be adjusted and the wave length to which the set is actually adjusted. This, however, means a displacement through two to three receiving channels, with the result that an arrangement of this kind is bound to be equipped with a separate compensating indicating device or the like. By the use of nickle-iron-alloys, such as "Permalloy" or the like, this registering error may, it is true, be reduced very considerably further still, but the high price of materials of this kind sets a strict limit to its use.

If, however, the wave length range up to 1000 kc/sec be sub-divided, for instance, in such a manner as to provide five sub-ranges of about 200 kc each, the same registering error of about 2 to 3% in each sub-range will only amount to 4 to 6 kc/sec. This means that the minimum deviation from the mean value amounts to only 2 to 3 kc/sec. Now since a transmission channel has a breadth of 9 to 10 kc/sec, it follows that in spite of the registering error tuning will always be effected to within the required channel, and it is possible to calibrate the set correctly for particular stations inscribed by name on the control panel without the use of additional compensating arrangements or the like, the control panel being provided for instance with a variable resistance or the like for the purpose of selecting the individual stations within the sub-ranges.

Since a variable resistance of this kind allows of continuous, i. e. non graduated, tuning, any loss of quality in the reproduction due to the residual detuning of the order of 2 to 3 kc/sec may be compensated for by merely turning the tuning knob at the control panel without, however, causing the index pointer coupled with the knob to move away from the position on the dial representing the station concerned.

If a set of this kind is provided with automatic sharp tuning, this latter will effect correct adjustment of the set without additional tuning, since the error lies within the limits of ±2 ±3 a deviation with which automatic sharp tuning arrangements can cope.

Arrangements which do not work perfectly continuously are capable of giving satisfactory results when using this principle. If, for example, the rotary condenser spindle of a receiver be driven by a ratchet wheel mechanism which in its turn is set in motion by means of a dialling disc or the like as in automatic telephone sets, it will be clear that with an arrangement of this kind, provided the teeth of the ratchet wheel mechanism be made fine enough, or provided a sufficiently high transmission ratio is provided between the ratchet wheel mechanism and the condenser spindle, it would be possible to select each station with sufficient accuracy.

Such fine sub-division of the ratchet wheel drive would, however, necessitate an extremely large number of contacts for use in selecting a station. In this direction again a remedy is provided by the sub-dividing of the wavelength range.

If the total wavelength range be first subdivided into a number of sub-ranges, it becomes possible to select any desired station within these sub-ranges without an excessively large number of impulses, since the registering error due to the fact that the selecting of a station is no longer effected continuously but in small stages, becomes so small, as expressed in kc/sec, owing to the preceding sub-division of the wave length range into a considerable number of sub-ranges, that the residual deviation can be compensated for by means of automatic tuning control.

It thus becomes possible in this case, in contrast to arrangements such as those used in automatic telephony where only a certain definite receiving point can be selected at a time owing to the use of preselectors and main selectors, by the use of automatic tuning control, to select any stations comprised within the sub-ranges, the wavelengths of which need not be known at all at the time the set is built.

If in the first mentioned constructional example, the variable resistance be tapped at certain intervals and the tappings be connected to press-button contacts, or in the case of the last mentioned example if arrangements be provided which transmit a certain previously adjustable number of impulses, either magnetically or electromagnetically or otherwise when a press-button is operated, then the described arrangements may also be used in connection with press-button control. For this purpose the arrangement may be such that when a certain press-button is operated not only is a certain station selected within a sub-range, but the sub-range itself is also selected.

The sub-ranges may in their turn either be switched on likewise by means of ratchet wheel mechanisms, as indicated by way of example in Fig. 19 of the accompanying drawings, or they may be selected by means of separate leads connected severally to principle relays; or alternatively there may be provided arrangements working on a principle similar to that of the transmission of signalled orders on ships, whereby an indicating and a switching lever are always in corresponding positions in the receiver and control instruments respectively.

The described individual embodiments may also be combined in any desired manner.

Motor drives may also be employed for selecting the sub-range or for fine tuning within the sub-range, or for both purposes; in every case the advantage of sub-dividing the wavelength range which is achieved that any inaccuracies resulting from the running on of the motor due to inertia or to idle movement in the gearing used, and any registering errors due to these causes are rendered harmless in their effects by the sub-division of the wavelength range, it being possible to use automatic tuning devices for compensating the residual errors. Since with the said arrangements it is essential

to avoid registering errors, it is desirable, in order to obtain the desired result with a minimum number of sub-ranges, to take steps to ensure that the relative inaccuracy within the individual sub-ranges remains the same. In an arrangement providing for graduated switching of the sub-ranges of the type shown in Fig. 19, care must therefore be taken to ensure that the sub-ranges have as nearly as possible an approximately equal extent expressed in kc/sec.

If in the case of a set in which fine tuning is effected by saturation, and in which therefore the inductivity is variable gradually and not in steps (which may be effected not only by means of premagnetising but equally well, as in the case of varying capacity, by the use of capacitive or inductive apparent resistances with the aid of appropriate valve circuits), the switching of the ranges being effected solely by connecting larger or smaller condensers to this variable inductance, then this precondition will be only very imperfectly fulfilled. This is the case since when larger or smaller condensers are connected in, the range of variation of the inductivity, expressed as a percentage, remains always the same, from which it follows that when small condensers are connected in, on alteration of the inductivity in certain proportion, very much greater wavelength ranges are swept through than when larger condensers are connected in, owing to the lower wave ranges to which adjustment is effected when the smaller condensers are connected in.

To overcome this difficulty the circuit arrangement shown in Fig. 19 is provided, which shows only a single oscillating circuit suitable for use for example in a single span superheterodyne set. If a superheterodyne receiver with one or more preselection circuits be employed the tuning elements shown in Fig. 19 must be provided in an appropriately larger number.

This applies to a still greater extent to multicircuit in-line receivers, which however are for other reasons less suitable for the purposes of the present invention although their use is not intended to be precluded.

L1 in Fig. 19 denotes the variable self-inductance proper. In the position shown in the drawing, L1 is connected to the condenser C1 to form an oscillating circuit and in this case the entire range of operation of the coil L1 is utilised. When the contact segments are advanced to the extent of one contact by means of the ratchet wheel mechanism St, the coil L1 is coupled with the condenser C2 to form an oscillating circuit. Owing to the relatively small sub-ranges (which incidentally affords the further advantage that the range of variation of the variometer L1 used or of corresponding capacity varying means can be kept small) the amount of transmission channels covered in the second range will not be substantially different compared to the first range, although C2 should be somewhat smaller than C1 so that the sub-range corresponding to the next frequencies is then switched on.

If however on further movement of the switching arm to the third contact, the next higher range be then switched in, the range of frequency would nevertheless be gradually increased to such an extent that the pre-condition set forth above as being desirable can no longer be regarded as then being approximately fulfilled. To overcome this drawback there is employed the switching arm B. This switching arm connects in parallel with the coil L1 a coil L2 which has the effect of causing the alteration of inductivity to be less in the next two switching positions than in the preceding switching positions, since the total inductivity of the circuit then consists of a fixed inductivity L2 with which a variable inductivity L1 is connected in parallel.

On further reducing the frequency by switching over to fresh ranges there are then switched in a first tapping and later on possibly one or more subsequent tappings of the coil L2. Although, owing to the switching operations affecting the coil L2 a reduction of wavelength likewise occurs, whereby the switching over of condensers might be avoided or the number of condensers to be switched in by means of the switching arm A might be reduced, it is nevertheless advisable in many cases to provide separate condensers for each individual contact of the switching arm A, since it is possible by adjustment of the condenser C1, C2 and Cn to effect a synchronising equilisation between the individual circuits of the set in the case of muticircuit sets. Connecting a fixed coil L2 in parallel with the variable inductance L1 has the further advantage that the quality of the coil may thereby be adapted to the individual wavelengths.

If, for example, coils having ferro-magnetic coils be used, it is possible, for the long wave ranges, to employ coils having cores of relatively high permeability, whereby inter alia the expenditure involved in pre-magnetising can be reduced; when the wavelengths are decreased, however, coils of this kind would exert a very considerable damping action. Now since the coil L2 is connected in parallel with them, and this coil becomes more and more decisive for the damping of the circuit as the length of the received waves becomes progressively shorter, this effect can be kept within favourable limits.

What is here said in regard to variation of inductivity also applies, with appropriate modification, to arrangements working with alteration of capacity for tuning purposes, as also to all the other embodiments mentioned above, as in fact all the individual embodiments discussed in the present application may be combined in any desired manner, it being understood that all such combinations fall within the scope of the invention for which protection is sought.

The connecting of the controls of the set to the set proper may be effected in a variety of ways. Either separate leads may be provided or existing conductors, for instance, the heavy current conductor may be used for control purposes by superposing high frequency currents or low frequency currents on the conductor current, or alternatively by tapping direct currents in alternating current leads with the aid of the point switching arrangements. The embodiment of a direct high frequency radiation known per se between the control device and the receiving or transmitting set to be controlled, for the purpose of directing the controlling and regulating currents, is likewise possible. In this connection, for the purpose of varying amplitude or frequency, continuous regulation of a capacitive or inductive tuning element associated with the receiving or transmitting set to be controlled may be effected, while the switching over from one wave length range to another, and the like, may be brought about by varying the number of transmitted impulses.

In these cases, however, it is necessary to provide a lead for transmitting the sound output from the receiving set to a control device when the receiving set is not in the same place or room

as the controlling device, but if the remote control is to afford all its advantages, it is expedient to set up the receiving device remote from where the control device is operated, for instance, from a dwelling room but even in a case of this kind it is possible to do without a connecting conductor provided, for instance, by means of a short wave or ultra short wave connection maintained in a certain fixedly adjusted canal, the transmission received by the receiving set can be radiated to the place from which it is desired to hear it, where it can then be received by a receiver which is adjusted to a fixed wavelength and therefore does not require any additional controlling means.

In this case also, the radiation may be effected along existing leads, for instance, along mains current or power current leads. Installations of this kind are particularly suitable when it is desired to receive various transmissions in several rooms, and it is then possible for various reproducing sets, to which the programmes are fed in different short wave channels or even long wave channels, to be operated in conjunction with different receivers proper remote controlled with or without wiring connections and placed for instance in a central or storage room. The short wave retransmitting of a received transmission to the reproducing device proper affords particularly great advantages in the case of sets to which only a limited number of persons are required to listen-in. After a transmission received by a receiving set and particularly by a remote control receiving set be retransmitted on an ultra-short wave which is intended to be fixedly or at least practically fixedly adjusted, it becomes possible to provide the individual occupants of a house with headphones on which a small ultra-short wave receiver is directly mounted or otherwise combined in a simple form. In the case of a valve receiver, it is generally sufficient, since the transmitting distance is but slight, to provide a single valve which may be operated by means of a pocket lamp battery.

In many cases, however, a detector set will suffice, say that for example when a one or two meter wave is used merely a short length of wire on the headphone will suffice as the receiving antenna which feeds its energy to a crystal detector or the like which converts the ultra-short wave energy into sound that can be directly heard in the headphones.

Sound generators are also known which convert high frequency outputs directly in the sound output with the aid of a hearing wire which is extremely thin and therefore has a negligible amount of thermal inertia. If the wire of a thermal telephone of this kind, which as is well-known can be made extremely small and light so that it can be introduced into the ear passage in the form of a small plug, be directly inserted in the antenna circuit of an ultra-short wave receiver, the complete arrangement will consist of a conductor which will be of a length of about half a meter when the wavelength used is one meter, the wire of the thermal microphone being connected approximately to the middle of this conductor.

This arrangement or a similar arrangement enables the receiving apparatus to be extremely light and small, even smaller than an ordinary headphone, and enables the wearer of such a headphone to receive broadcast programmes in any of the rooms of a house equipped with the described installation without other persons in these rooms being in any way disturbed by these programmes.

The employment of this principle is not restricted to the arrangements described in the present application, although it becomes particularly advantageous in connection therewith.

The control device for one of the arrangements described above may take the form illustrated in Fig. 20. On the left is shown a dialling disc serving for the selection of any one of for instance ten sub-ranges. When a sub-range has been dialled the appropriate wave of the divisions 1 to 10 on the scale Sk is illuminated, which may be effected by means of contact mechanism coupled with the dialling disc, which causes the division of the scale concerned to remain illuminated until the set is switched off or a new sub-range selected. For this purpose there is coupled with the dialling disc W a contacting mechanism which, on the dialling of a number, carries a contact arm or the like along with it and leaves this arm in its switching position until a new number is dialled, whereupon it is restored to its position of rest, as the mechanism of the dialling operation, by means of spring force or other agency and then on the dialling of a new number assumes a fresh position corresponding to the new number dialled.

As illuminating means there may suitably be used special glow lamps which may, for instance, be constructed after the manner of the known amplitude valves and which may be placed in suitable positions beneath each of the divisions 1—10 of the scale.

K1 denotes a knob coupled to a potentiometer or variable resistance whereby the fine adjustment of the stations within a sub-range is effected. Coupled with the knob K1 by means of a cord or the like is a pointer Z which can be moved up and down as indicated by the double arrow, thereby indicating which of the stations marked up in the divisions 1—10 has been selected.

K2 denotes a loudspeaker regulating potentiometer or variable resistance which may be inserted in the lead to the loudspeaker, or which may be arranged to vary the grid bias of one or more valves in the receiver for the purpose of volume control, or which may effect the volume control in any other known manner.

There is further provided at any suitable point in the control device a switch which controls, either directly or through the intermediary of a relay, the switching on and off of the current supply which will generally be taken from the mains.

Instead of the dialling disc W it is also possible to provide beneath the divisions 1—10, press buttons which when operated select a sub-range through the intermediary of appropriate relays, or alternatively, when operated cause, with the aid of a mechanical or electromagnetic mechanism, a number of impulses to be transmitted which in their turn effect the selecting of a particular sub-range in the receiving set.

As selectors for the switching of the individual wavelength ranges there may be employed conventional pre-selectors such as are commonly used in automatic telephone installations. The same applies also to the dialling discs used in the control device.

LEON LADISLAUS DE KRAMOLIN.

PUBLISHED
MAY 25, 1943.
BY A. P. C.

L. L. DE KRAMOLIN
RADIO APPARATUS
Filed March 11, 1940

Serial No.
323,450
7 Sheets-Sheet 1

Fig. 1

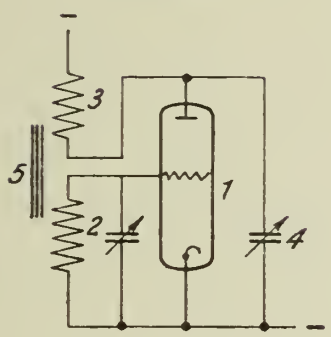

Fig. 2

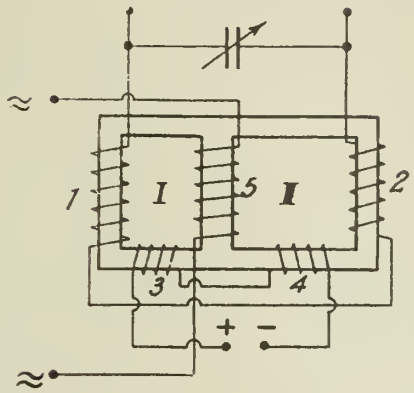

Fig. 3

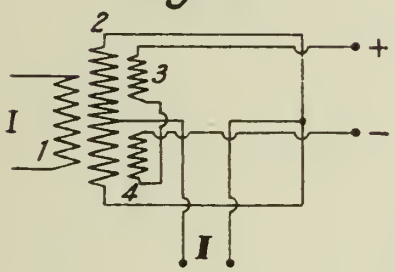

Fig. 4

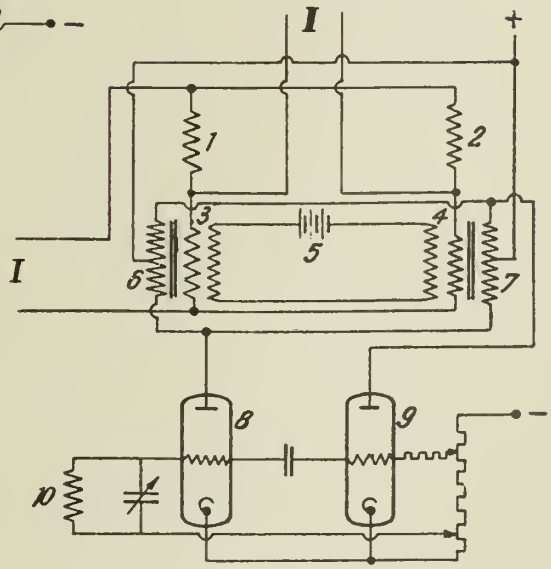

Inventor:
L. L. De Kramolin
By Young, Emery & Thompson
Attorneys

PUBLISHED
MAY 25, 1943.
BY A. P. C.

L. L. DE KRAMOLIN
RADIO APPARATUS
Filed March 11, 1940

Serial No.
323,450
7 Sheets-Sheet 2

Fig. 7.

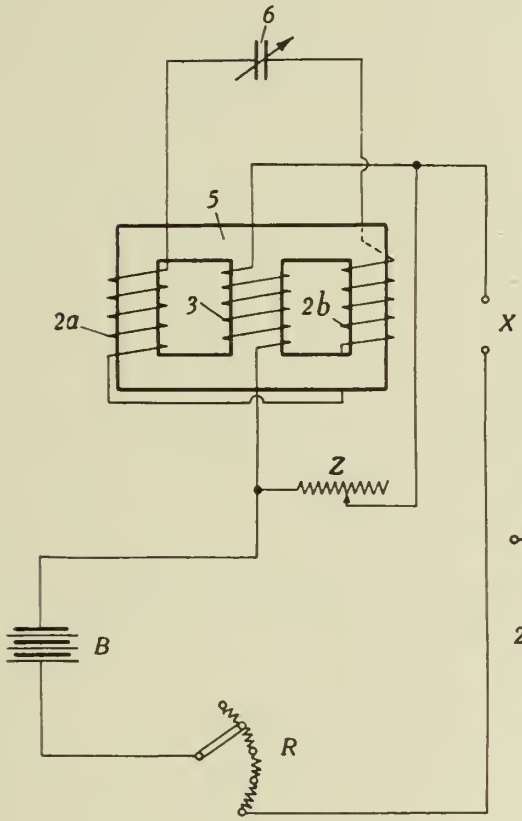

Fig. 5.

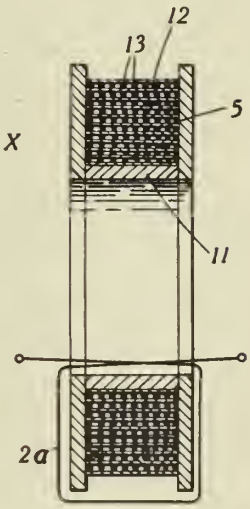

Fig. 6.

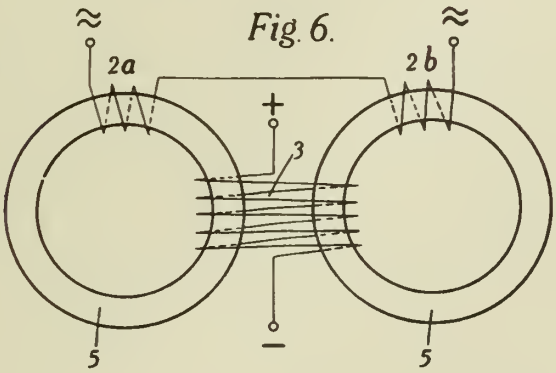

Inventor:
L. L. De Kramolin
By Young, Emery & Thompson
Attorneys

PUBLISHED
MAY 25, 1943.
BY A. P. C.

L. L. DE KRAMOLIN
RADIO APPARATUS
Filed March 11, 1940

Serial No.
323,450
7 Sheets-Sheet 3

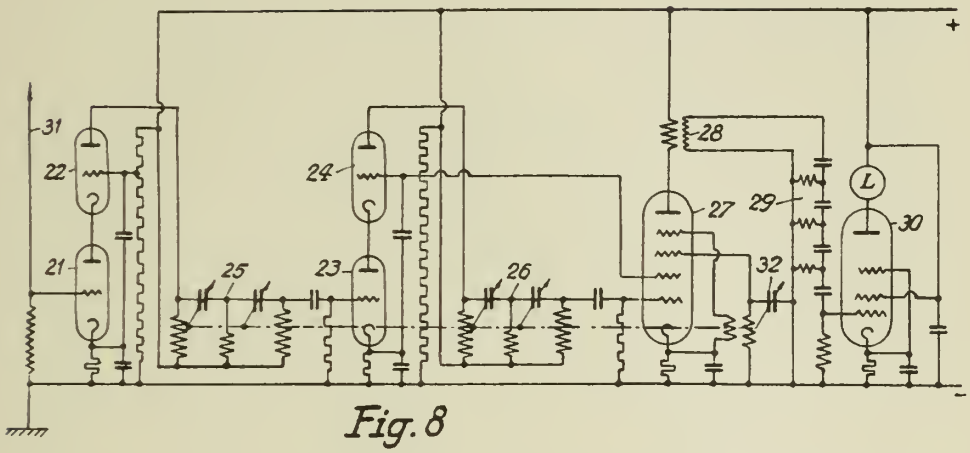

Fig. 8

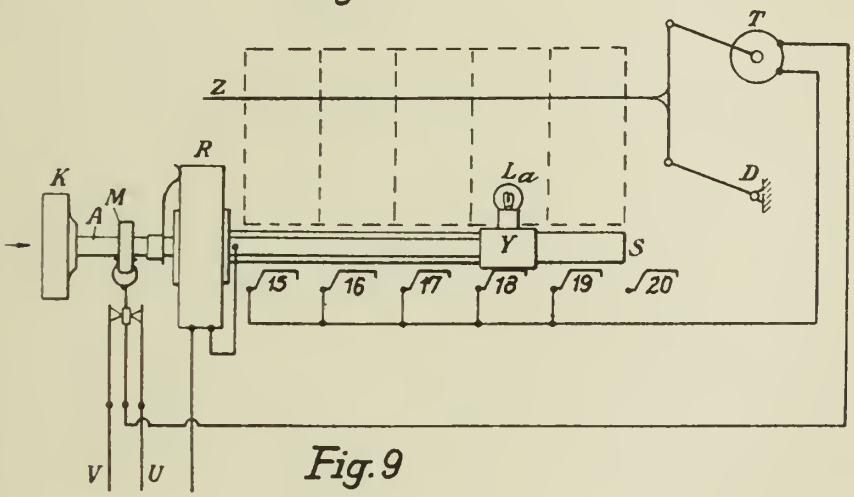

Fig. 9

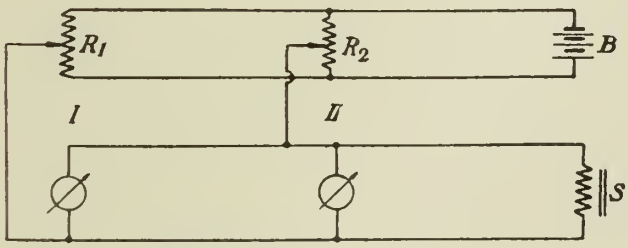

Fig. 10

Inventor:
L. L. De Kramolin
By Young, Emery & Thompson
Attorneys

PUBLISHED
MAY 25, 1943.
BY A. P. C.

L. L. DE KRAMOLIN
RADIO APPARATUS
Filed March 11, 1940

Serial No.
323,450
7 Sheets-Sheet 4

Fig. 11.

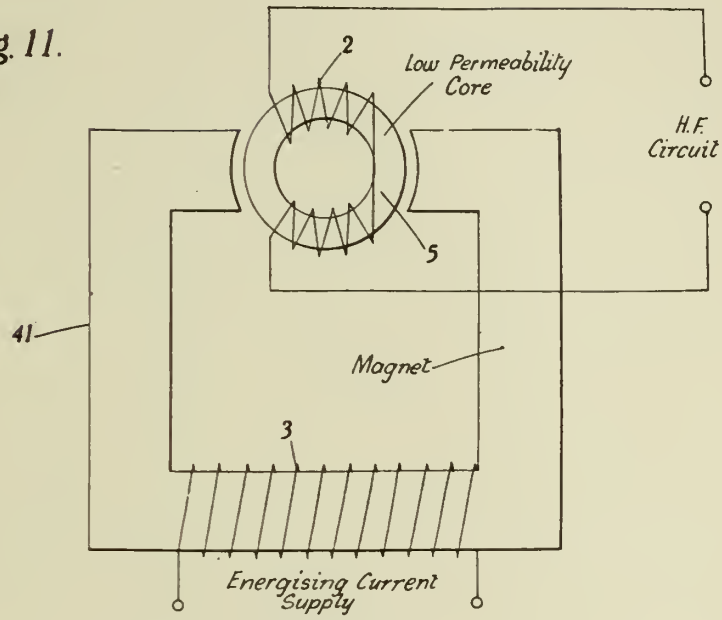

Fig. 12.

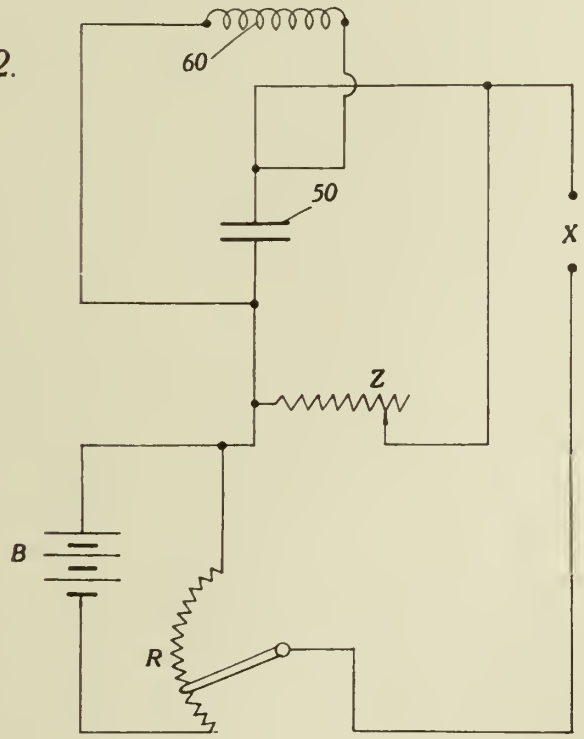

Inventor.
L.L. De Kramolin
By Young, Emery & Thompson
Attorneys

PUBLISHED
MAY 25, 1943.
BY A. P. C.

L. L. DE KRAMOLIN
RADIO APPARATUS
Filed March 11, 1940

Serial No.
323,450
7 Sheets-Sheet 5

Fig. 13.

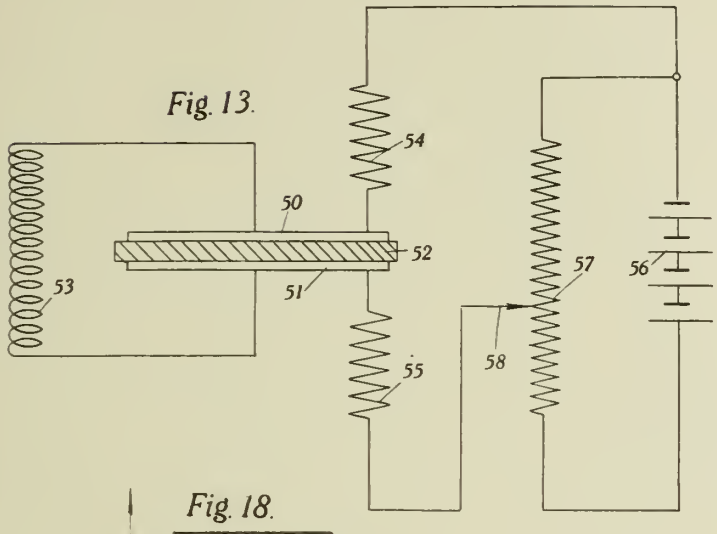

Fig. 18.

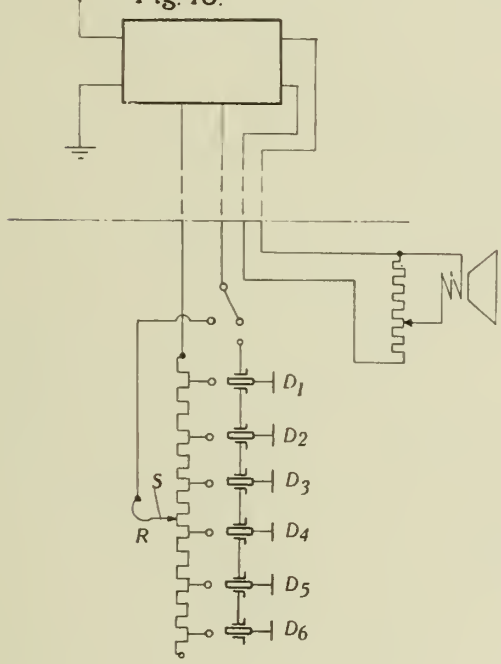

Inventor:
L.L. De Kramolin
By Young, Emery & Thompson
Attorneys

PUBLISHED
MAY 25, 1943.
BY A. P. C.

L. L. DE KRAMOLIN
RADIO APPARATUS
Filed March 11, 1940

Serial No.
323,450
7 Sheets-Sheet 6

Fig. 16.

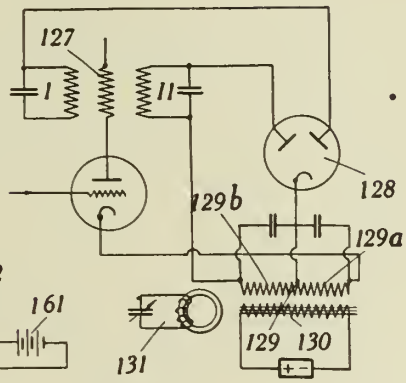

Fig. 14.

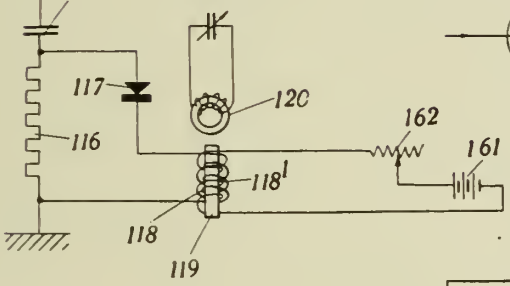

Fig. 17.

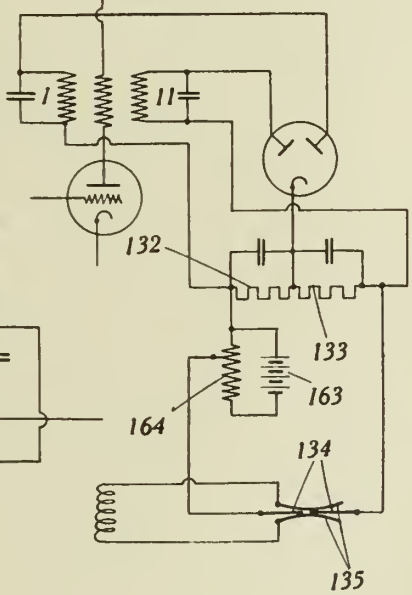

Fig. 15.

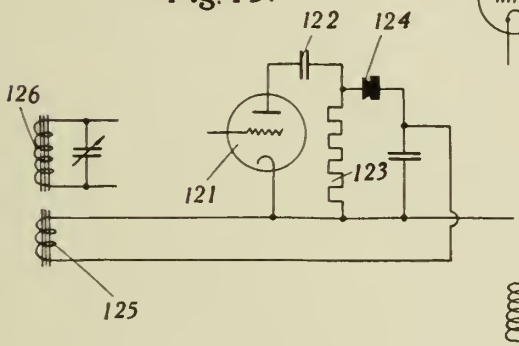

Inventor:
L. L. De Kramolin
By
Young, Emery & Thompson
Attorneys

PUBLISHED
MAY 25, 1943.
BY A. P. C.

L. L. DE KRAMOLIN

RADIO APPARATUS

Filed March 11, 1940

Serial No.
323,450
7 Sheets-Sheet 7

Fig. 19.

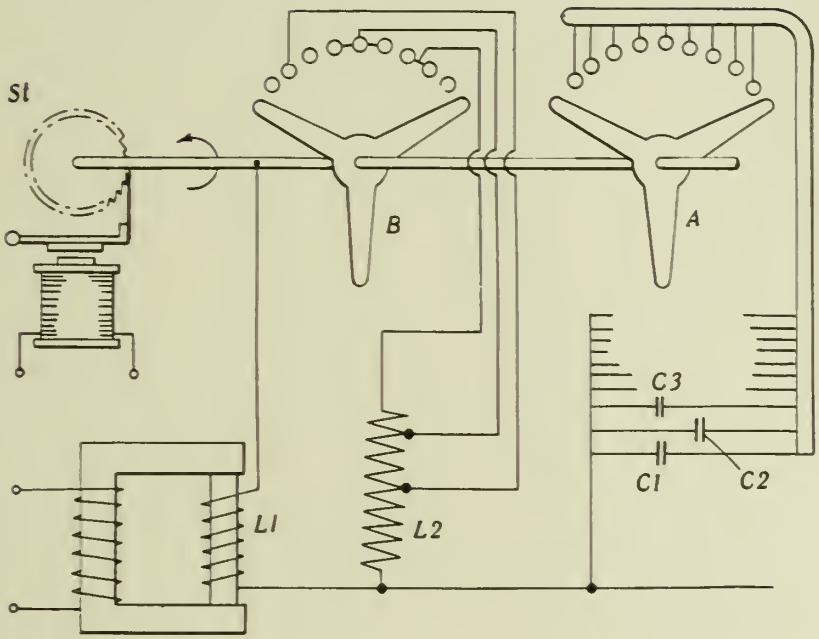

Fig. 20.

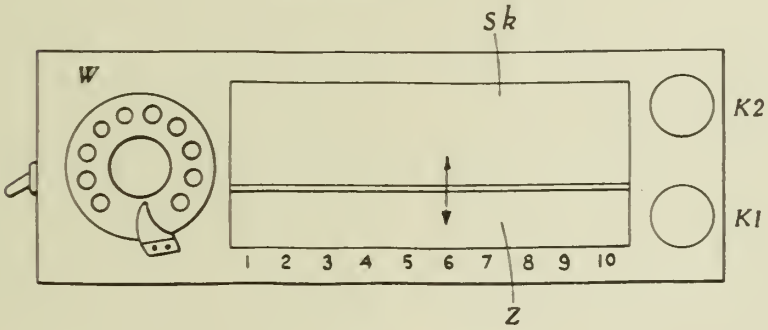

Inventor:
L. L. De Kramolin
By Young, Emery & Thompson
Attorneys

Published May 25, 1943

Serial No. 324,000

ALIEN PROPERTY CUSTODIAN

HEATING SYSTEM

Giusto Catalani, Genova-Bolzaneto, Italy; vested in the Alien Property Custodian

Application filed March 14, 1940

The present invention relates to a heating system and more particularly to an independent heating system including one or more radiator apparatus and a boiler apparatus which can be fed by any suitable source of heat.

The main object of the invention is to provide an independent heating device, small in size and with a closed circuit and having a high efficiency.

A further object of this invention is to provide a heating device by which the radiation of heat is made continuous and in which the source of heat employed in the boiler may be of any suitable type.

Other objects and other advantages of the present invention will be better understood from the following detailed description with reference to the accompanying drawings wherein:

Fig. 1 is a longitudinal section of a very simple embodiment of the present invention;

Fig. 2 is a side view of the device shown in Fig. 1;

Fig. 3 is a section similar to that of Fig. 1, of an alternative embodiment of the invention;

Figs. 4 and 5 show respectively a longitudinal and a side view of another embodiment of the invention.

Fig. 6 is a longitudinal section of another form that the invention may assume.

Referring to the drawings, where the same characters in the various figures represent equal elements, it is to be seen how the heating system is formed in all cases by a heating element of reduced size, where the heat, developed by any suitable type of heating source, is transmitted to a liquid, obliged to run the length of a closed circuit chiefly formed by the radiator apparatus.

In Fig. 1, for instance, the heating element or small boiler consists of two tubes which are practically concentric. In the inner one of said tubes, shown by **2**, the source of heat **3** is placed, and such a source may be obtained by an electrical resistance as shown in the drawings or by a gas burner or by a flame obtained by means of any suitable fuel.

The outer tube **1**, enclosing tightly the tube **2**, contains the heating liquid and is connected directly to the radiator. This radiator may be of any suitable type but must preferably be formed of a tube **4** provided with fins **5** which will insure good radiation of heat.

In the upper part of the radiator, a tube **6** in parallel relation therewith is provided, which is not ordinarily filled with the heating liquid but acts as an expansion chamber.

The operation of the system is as follows: the system is filed up to the level A—B with a suitable liquid, the boiler is then heated, for instance by connecting the electrical resistance **3** to the electric light feeding system, if an electrical source of heat is used, as illustrated in the accompanying drawings. Then the liquid contained in tube **1** and which surrounds the heating element, becomes heated and upon reaching, for instance, a temperature T_1, starts circulating in tube **4**, as indicated by the arrows. In going through this procedure, the liquid heats by conduction the walls of tube **4** and the fins **5** which then tarnsmit the heat to the room by radiation.

When the liquid reaches the end of its circuit, its temperature will be of T_2, less than T_1 and will then return to the lower portion of the boiler, where it will again be heated repeating the cycle described above. The increase in volume which the liquid has acquired through heating as well as the steam which may develop are collected by tube **6**.

The quantity of liquid being very small, the time necessary for the normal operation of the system is minimum thereby constituting an enormous advantage. Further, for the purpose of increasing the efficiency, the liquid should preferably not be composed of pure water only, but rather water containing a solution of salt or hydrate which will allow the water to reach a temperature higher than 100° C, for instance 150° C, without reaching its boiling point. In this way too, the metal composing the radiator must be a good thermic conductor, such as copper; if, however, owing to economical reasons the radiator were to be made of iron, the surface of the iron should be copper plated thereby allowing for an increase in the efficiency of the transmission of heat.

In Fig. 3, another embodiment of the invention is shown, quite similar to that of Fig. 1, but by which the elements **1**, **2**, **3** constituting the boiler, are arranged horizontally instead of vertically.

Figs. 4 and 5 show a more powerful system by which, the length of the tube **4** provided with radiating fins **5** is greater.

The embodiment represented by Fig. 6, shows the radiator divided into two parts arranged symmetrically in respect of the boiler **1**, **2**, **3**, and in parallel to each other, these two parts are able to constitute two separate radiators.

Naturally, in these last two cases, the power of the heating element **3** must be greater and in any case will depend upon the total length of the radiating tubes **4**.

While I have illustrated and described some preferred embodiments of my invention, I do not wish to be limited thereto, since it will be readily apparent to those skilled in the art, that certain changes may be made therein without departing from the spirit of the invention.

GIUSTO CATALANI.

PUBLISHED
MAY 25, 1943.
BY A. P. C.

G. CATALANI
HEATING SYSTEM
Filed March 14, 1940

Serial No.
324,000
2 Sheets-Sheet 1

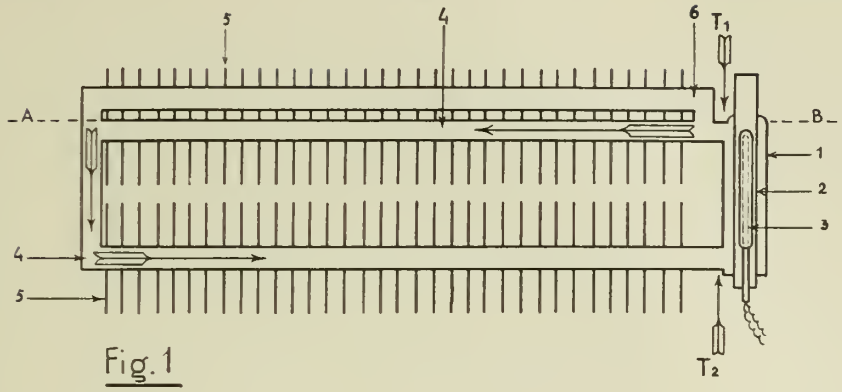

Fig. 1

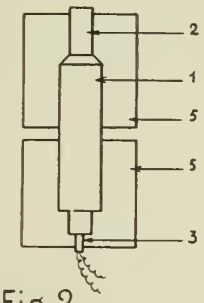

Fig. 2

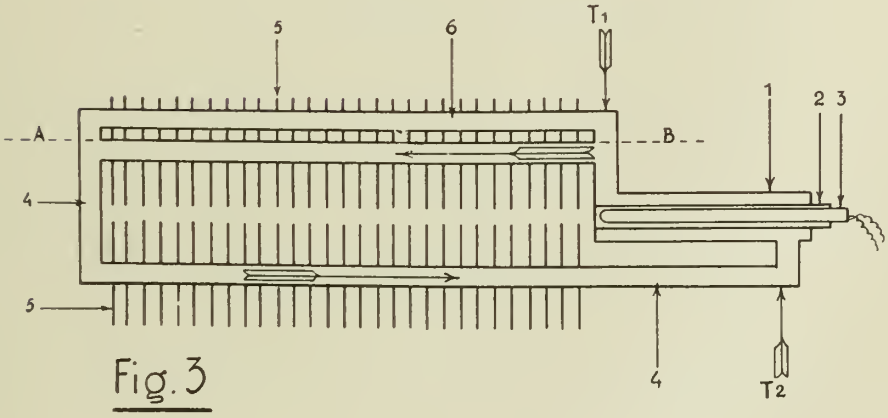

Fig. 3

INVENTOR
GIUSTO CATALANI
BY
Young, Emery & Thompson
ATTS.

PUBLISHED

MAY 25, 1943.

BY A. P. C.

G. CATALANI

HEATING SYSTEM

Filed March 14, 1940

Serial No. 324,000

2 Sheets-Sheet 2

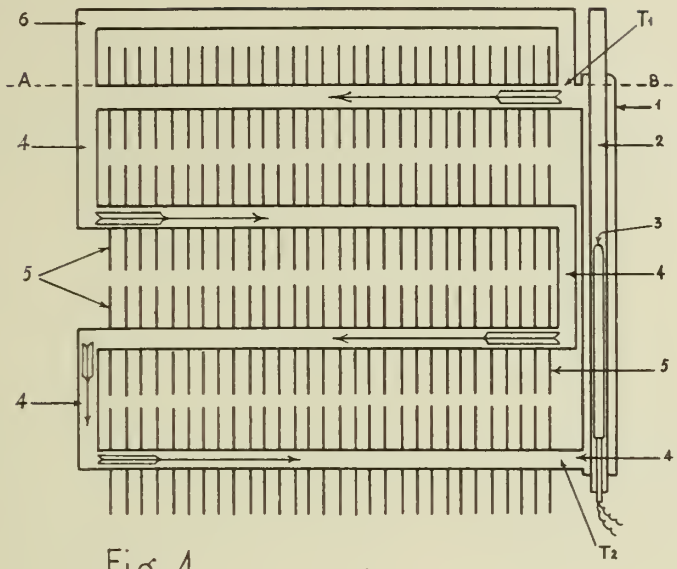

Fig 4

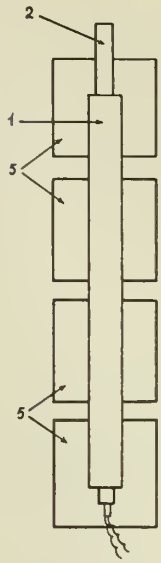

Fig. 5

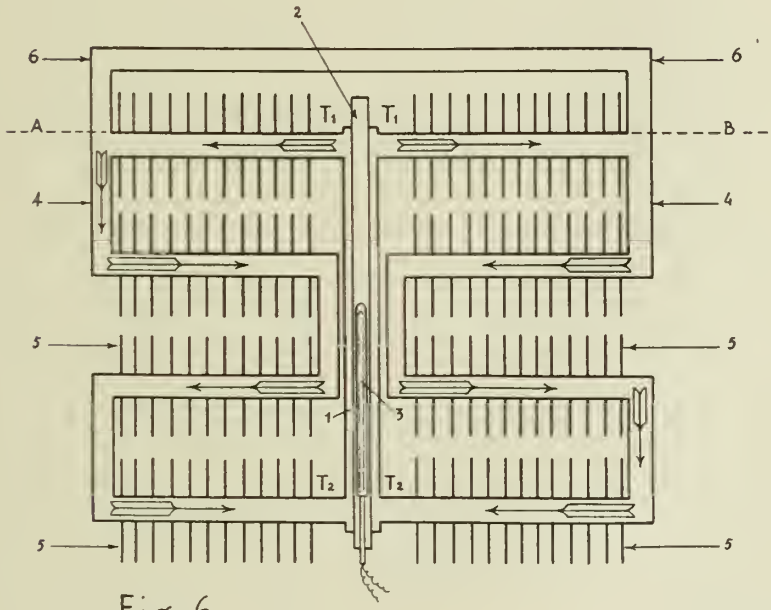

Fig. 6

INVENTOR

GIUSTO CATALANI

BY

Young, Emery & Thompson

ATTYS.

Published May 25, 1943

Serial No. 324,963

ALIEN PROPERTY CUSTODIAN

RECEIVER FOR FREQUENCY MODULATED WAVES

Ernst Hermann Plump, Berlin, Germany; vested in the Alien Property Custodian

Application filed March 20, 1940

In order to provide a receiver for frequency modulated waves which has an extremely low noise potential, the proposal has already been made to render the width of the receiving filter narrow as compared with the frequency stroke and to shift as regards its frequency the working curve of the filter or the potential, to be demodulated, in the rhythm of the gained modulation potential such that the demodulation takes place always within the same working range of the working curve. Such a receiver is of particular importance in the case of short waves and ultra-short waves.

A noise potential which is practically sufficiently low is obtained with substantially smaller requirements as compared with the said proposal, if, in accordance with the present invention, in receivers for frequency-modulated waves, more especially for short waves and ultra-short waves, the band width is varied in dependence on the gain modulation potential in such a manner that there corresponds with a small frequency stroke or swing a small band width and with a large frequency stroke or swing a large band width. Hence, the invention originates from the teaching that only at small signal amplitudes a very low noise potential is necessary, while the latter can increase when the signal amplitudes become larger. The variation of the band width is hereby so carried out that the proportion of the frequency stroke or swing and band width remains almost constant at any frequency stroke or swing.

In receivers for amplitude-modulated waves, it is known to vary the band width for the purpose of controlling the selectivity. In this case, this variation is carried out in dependence on the amplitudes of the incident waves in such a manner that when powerful transmitters are received, there is a low selectivity assigned to the receiver, and when weak transmitters are received the selectivity assigned to the receiver is high. In the receiving arrangement according to the invention however, the amplitude of the arriving waves is of no importance to the variation of the band width.

In describing my invention, reference will be made to the attached drawings wherein the single figure illustrates a frequency modulation receiver including the intermediate-frequency band width controlling means of my invention.

The band width of the receiver according to the invention may be varied for instance by varying the coupling or by a detuning of the coupling filter. The band width of a coupling filter can be controlled by means of known control elements such as for instance by means of tubes, hot conductors, rectifiers, or by varying the preliminary magnetization of an iron coil.

The variation of the band width of the receiver according to the invention may also be advantageously realized by varying the damping of one or of several intermediate-frequency circuits. The damping may hereby suitably be varied by means of a controllable resistance such as, for instance, by means of a damping tube, or hot conductor. An example of construction is shown in the figure in which only those details are shown which contribute to an understanding of the invention. A is an aerial supplying wave energy to amplifier **2** connected at its output to the grid **4** of intermediate-frequency amplifier tube **6**. The anode **8** of tube **6** is connected with a circuit **10** tuned to the intermediate frequency. The output of **8** is supplied to tube **16**. In the figure, items **6** and **16** are intermediate-frequency amplifiers which supply frequency modulated waves to a demodulator in **20**. **24** is an audio-frequency amplifier. The audio-frequency output of **20** is supplied to rectifier G1 and the detected audio-frequency potential (detector G1) operates upon the grid **28** of the damping tube DR which functions as a controllable resistance and represents a variable damping of the intermediate frequency circuit.

ERNST HERMANN PLUMP.

PUBLISHED

MAY 25, 1943.

BY A. P. C.

E. H. PLUMP

RECEIVER FOR FREQUENCY MODULATED WAVES

Filed March 20, 1940

Serial No.

324,963

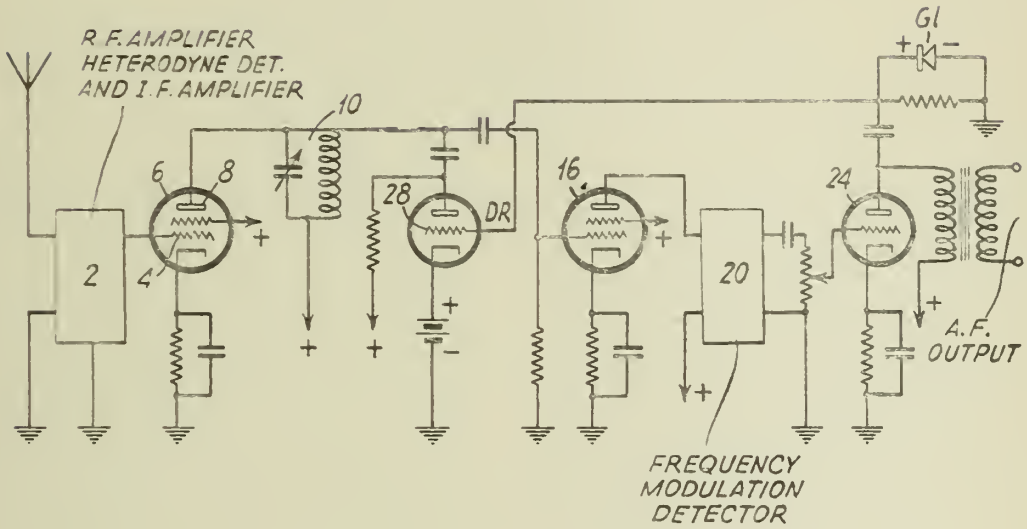

INVENTOR
ERNST HERMANN PLUMP
BY H. S. Grover
ATTORNEY

Published May 25, 1943

Serial No. 325,317

ALIEN PROPERTY CUSTODIAN

METHOD AND MEANS FOR THE ILLUMINATION OF PAINTINGS

Walther Thorner, Berlin-Zehlendorf, Germany; vested in the Alien Property Custodian

Application filed March 22, 1940

Pictures in colours being ever so near to reality have a great disadvantage in respect of their prototypes in nature that their colours possess a much smaller intensity of brightness. One of the objects of the invention is the brightening up of coloured paintings in a way that permits to increase ad libitum the brightness of the colours. This is accomplished by means of first making a photographic picture in colours and then by projecting the slide picture in colours thus gained by means of a picture projecting apparatus on to the painting. The slide picture must be projected in such a manner that the contoures of the same are exactly superposed on the original painting. Every dot of the coloured picture will thus be illuminated by a light which is exactly the colour of the dot itself. Thus the impression of brilliancy of colours is considerably increased for the spectator. In accomplishment of the method described subtractive colour-photographies should be provided. It is also possible to employ several slide pictures which are representing different colour extracts of the originally composite colours, these unicoloured pictures being then additively united on the picture during projection. In the latter case the photographic camera and the projection apparatus are provided with several objectives. It is also possible to employ more than one photographic camera and more than one projection apparatus. For making or projecting the colour extracts as in the case mentioned above any objection considering the parallax may be omitted. For increasing the effect of this method it is possible to photograph in colours a second time the painting in question now being illuminated in its own colours. The second colour photography thus produced has a far more increased brilliancy and colour contrast than the first one.

As the space in front of the picture being needed for the spectator it will appear preferable to mount a projection apparatus for executing this method at the border of the painting, i. e. at its upper border where it should be fixedly mounted in such a manner, that the extension of the optical axis of the projection objective forms a sharp angle with the picture plane of the painting. It is to be understood that the photographic apparatus should have been placed on the same spot, where the projection apparatus is to be mounted. The picture in the camera is then distorted, but this has no disadvantage, as the form of the distorted picture will be again restored during projection.

The picture shows schematically in a vertical section a preferred embodiment of the invention. There is mounted on the wall (*a*) a painting (*b*) in the frame (*c*). Over the painting there is an extension (*d*) of the wall (*a*) which extension carries the projection apparatus. The latter includes the lamp (*e*), the condenser lens (*f*), the colour slide picture (*g*) and the projecting objective (*h*). The optical axis of the projection apparatus is directed obliquely on the centre of the painting.

I am aware that it is already known to illuminate paintings for increasing the brilliancy of the same. It has also been proposed to employ coloured light and also a mixture of light of different colours for producing the desired effect. But it is generally impossible by the former methods to increase the gradation of colours by increasing the intensity of illumination, for an overilluminated picture will loose its colour brilliancy, the colours themselves give in this case the impression of paleness. These disadvantages are removed by the present invention.

WALTHER THORNER.

PUBLISHED

MAY 25, 1943.

BY A. P. C.

W. THORNER

METHOD AND MEANS FOR THE ILLUMINATION OF PAINTINGS

Filed March 22, 1940

Serial No. 325,317

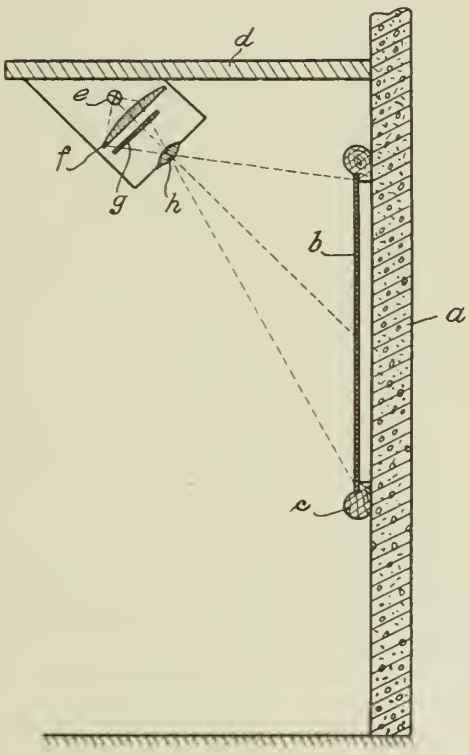

INVENTOR.

Walter Thorner

BY Singer, Ehlert, Stern & Carlberg

ATTORNEYS

Published May 25, 1943

Serial No. 326,088

ALIEN PROPERTY CUSTODIAN

DEVICE FOR EXPELLING THE CONTENTS OF A TUBE FOR LIQUID, SEMI-LIQUID OR PLASTIC SUBSTANCES

Cornelis Josef Campfens and Hendrik Dalstra, Middelharnis, Netherlands; vested in the Alien Property Custodian

Application filed March 26, 1940

The invention relates to a device for expelling the contents of a tube for liquid, semi-liquid or plastic substances, a generally usual. These tubes are made of a metal adapted to be easily deformed. They are mainly of cylindrical shape, tapering towards a flat end where the metal is bent over, and are provided at the other end with a thick and harder metal front plate which cannot be easily distorted and centrally of which the expelling nipple is located.

The invention has for its object a device for expelling the contents of tubes of this type which permits of gradually expelling the entire contents as desired.

The expelling device according to the invention consists substantially of a holder mainly having a triangular longitudinal section and a rectangular cross section, said holder having in its front side an opening through which the nipple of the tube to be compressed may extend, further having a longitudinal wall adapted to hinge about the top line of the holder and to be pressed inwardly into the holder, and having a wall opposite the hinged wall provided with a depression or recess located adjacent the front side of the holder and having such dimensions that during the expelling of the contents of the tube the hard end plate of the tube may be received therein.

In this way the tube may remain within the holder until the last portion of the contents of the tube has been expelled. The depressed portion of the base of the holder, or the recess provided therein, during the gradual expelling of the contents allows the hard end plate of the tube to be left undeformed, while nevertheless the soft tube metal therebelow is entirely compressed. The base of the holder and the hinged longitudinal wall facing it might occupy a symmetrical position with respect to the longitudinal axis of the tube during the whole expelling movement.

According to the invention this effect will still be increased if the depression or recess has such a length that the free front edge of the hinged longitudinal wall when pressed inwardly lies substantially flush with the edge of the depression or recess.

Further, according to the invention, the device may be constructed so that at the front side of the holder on a hub, having a stem, a valve for closing the expelling opening of the tube is swingably mounted so that the hinged longitudinal wall of the holder, while pressing with its edge against a cam or unround portion of the hub, in its normal position keeps the valve closed, whereas on moving the wall inwardly the valve follows this movement under the influence of a spring and frees the expelling tube.

By a pressure of the thumb on the hinged wall the valve in front of the expelling opening is lifted and the contents of the tube are expelled. If the pressure is ceased then the vlave is closed again. A closure cap need not be screwed on and off since the tube when out of use is always closed.

According to the invention the device may be so constructed that in a predetermined position of the hinged wall the valve hub may be turned in such a manner that the cam will become located outside the upwardly directed path of movement of the wall edge. Thus the hinged wall may be turned into an entirely open position and a tube may be inserted into the holder.

Within the spirit of the invention various embodiments and details of the expelling device may be used. Some of these embodiments and details will be described hereinafter with reference to the accompanying drawings, in which

Fig. 1 is a longitudinal section of a tube holder.

Fig. 2 is a plan view thereof.

Fig. 3 is a cross section on the line III—III in Fig. 1.

Fig. 4 shows a detail on a larger scale.

Fig. 5 is a partial longitudinal section of a modified embodiment of the tube holder.

Fig. 6 is a partial longitudinal section of a third embodiment.

Fig. 7 is a plan view thereof.

As appears from Figures 1, 2 and 3 the holder **1** has a mainly triangular longitudinal section and a rectangular cross section. From Fig. 2 also the shape is to be seen which in practice has given the best results and which has been so chosen to afford space for the collapsed material of the tube.

The holder **1** has three stationary side walls and one movable wall **2** which is hinged to the holder along the line **3—3**. The wall **2** may be pressed inwardly into the holder so that the contents of a tube placed between the base **4** and the wall **2** will be expelled. The expelling nipple of this tube extends through an oblong hole **5** in the front wall **6** of the holder. The mouth of this nipple is automatically closed by a valve **7** cooperating with the hinged wall **2**. This cooperation is obtained in the following manner.

The wall **2** is connected to the holder by a spring **8** in the form of a helical spring around the hinge axis **3—3** in such a manner that the wall tends to occupy the position shown in Fig.

1. In this position the edge 9 of the wall 2 presses against an unround portion 10 of a hub 11 connected to the valve 7 by a stem 12. The hub 11 is pivotally and also resiliently (spring 13) connected to the holder.

In the position shown in Fig. 1 the tension of the spring 8 overcomes the tension of the spring 13 so that the valve 7 closes the opening 5. However, if the wall 2 is pressed inwardly then the spring 13 causes the valve 7 to be opened.

In order to permit the wall 2 to be swung entirely outwardly so that a tube may be inserted into the holder the shape of the hub 11 and the unround portion 10 thereof are such that in the inwardly pressed position of the wall 2 the valve 7 with its stem 12 and hub 11 may be turned away entirely, so that the wall 2 may pass (Fig. 4).

The helical spring 8 as shown in Fig. 2 is provided centrally with a portion 14 located within the holder in a substantially flat plane. This portion 14 serves to press the tube in the holder against the base 4 so that the tube, also when its contents have been partially expelled, cannot be shifted.

The front wall 6 of the holder merges into the base 4 via a depressed portion 15 of the base. This depression serves to receive the thicker hard metal front plate of the tube when the material of the tube itself is deformed.

The tube, which initially in entirely filled condition is located on the base 4, will, at least as regards its axis, be gradually shifted in a direction towards the base during the expelling operation. For this reason the opening 5 in the front wall 6 has been made oblong. In Fig. 1 a tube in unexpelled condition within the holder is indicated by thin lines.

The edge 9 of the wall 2 in its innermost position substantially is flush with the edge of the depression 15.

In Fig. 5 a device is shown adapted to exert a stronger force on the wall 2, in particular if this wall has approached its extreme innermost position. To this end a lever 16, having a pressure surface 17, is mounted for rotation about the same axis as that about which the valve 7 may be swung, but free therefrom. The lower side of said lever when pressed downwardly moves over the wall 2.

Another device adapted to exert a strong pressure on the wall 2 is shown in Figures 6 and 7. This device comprises a double-armed lever 18 having its fulcrum at 19 on the wall 2. The short front arm 20 of this lever is bifurcated and both ends thereof engage toothed racks 21 fixed to the front wall 6. The long rear arm 22 of the lever 18 is kept upward by a spring 23. Now, by pressing with the thumb on the arm 22 it is possible to repeatedly depress the wall 2 with increasing force over a short distance.

CORNELIS JOSEF CAMPFENS.
HENDRIK DALSTRA.

PUBLISHED MAY 25, 1943. BY A. P. C.

C. J. CAMPFENS ET AL

DEVICE FOR EXPELLING THE CONTENTS OF A TUBE FOR LIQUID, SEMI-LIQUID OR PLASTIC SUBSTANCES

Filed March 26, 1940

Serial No. 326,088

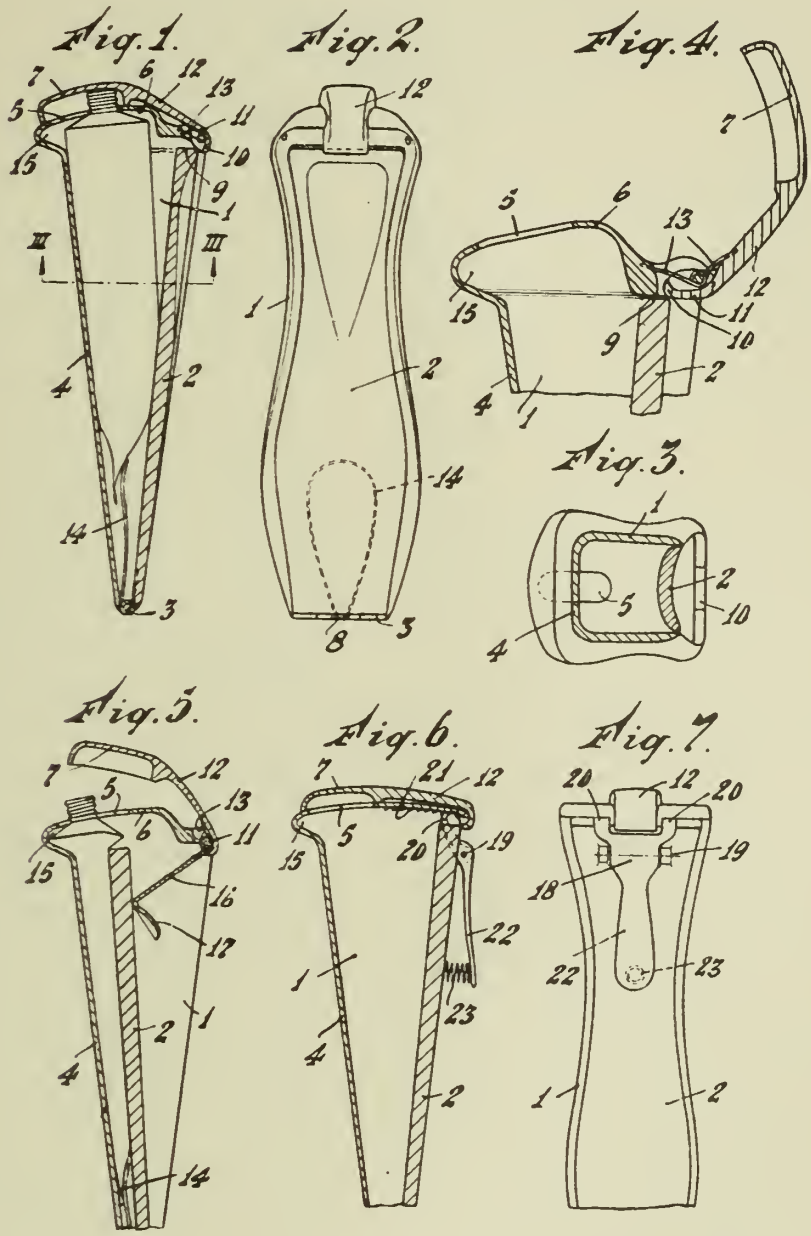

Inventors:
C. J. Campfens
& H. Dalstra
By E. F. Wenderoth Atty

Published May 25, 1943

Serial No. 326,111

ALIEN PROPERTY CUSTODIAN

CONTROL GEAR FOR CLUTCHES IN ADDING MACHINES

August Friedrich Pott, Zella-Mehlis, Germany; vested in the Alien Property Custodian

Application filed March 26, 1940

This invention relates to control gear for coupling or clutches to be installed in adding machines and the like.

In the case of machines hitherto known which have the driving mechanism for changing gears as well as for the printing mechanism and the tens-shift controlled partly by cams and partly by Malthese-drive, it has not been possible to remove the printing mechanism, for instance, when carrying out multiplications, thus entailing considerable loss of time.

It is an object of the present invention to have the printing mechanism removed when carrying out multiplications and divisions. In order to accomplish this, the old way of controlling the gear-changing as well as the printing mechanism and the tens-shift by means of cams and Malthese drives mounted on a motor-driven shaft has been abandoned. Instead, the gears are controlled in dependence of certain clutches, causing the clutch for the printing mechanism to be removed during the continued revolutions of the machine after the factor introduced into the machine has been printed once.

This is accomplished by providing a system of rods controlling a number of clutches, which are preferably mounted on a common shaft and operating the application and removal of said clutches in dependence of each other.

The invention will be better understood by reference to the following detailed description in connection with the accompanying drawings showing by way of example and schematically some embodiments of the invention and in which:—

Fig. 1 shows an adding machine, as viewed from left front having the invention applied thereto.

Fig. 2 shows a view towards the driving clutch, as indicated by the direction of arrow, but, to afford a clearer view of the whole, several parts have been omitted.

Fig. 3 shows a cross-section on line A—A through the clutch, in accordance with fig. 2, as viewed in the directions of arrow shown on fig. 2.

Fig. 4 is a perspective illustration of the clutch shown in fig. 3, with the different parts drawn out separately.

Fig. 5 shows a fragmentary plan view on the machine, in accordance with fig. 1, but for better display of those parts of the driving clutch connected with the motor key, as well as of the tens-shift and the printing mechanism, the coverplate and the paper carriage have been omitted on the drawing.

Fig. 6 shows a perspective view of the motor key and the gears which cause the separation of the motor key from the gears controlling the driving clutch.

Fig. 7 shows a perspective view of the operating parts controlling the driving clutch, the tens-shift clutch and the printing-mechanism clutch.

Fig. 7*a* shows one part of fig. 7 in detail.

Fig. 8 shows a cross-section of the machine on line B—B of fig. 5, viewed in direction of the arrows. The operating parts controlling the driving clutch and the driving clutch itself are shown in rest position.

Fig. 9 shows a cross-section in accordance with fig. 8, the operating parts being shown in the position assumed after depression of the motor key, while the driving clutch is still in rest position.

Fig. 10 shows a cross-section in accordance with fig. 8, the operating parts controlling the driving clutch being shown in that position into which they have been moved by a cam working in dependence of the clutch for the printing mechanism.

Fig. 11 shows a detail of fig. 10 in perspective view.

Fig. 12 shows a cross-section of a part of the machine, on line C—C of Fig. 5 in direction of the arrows, the clutch for the tens-shift and those parts controlling the same shown in rest position.

Fig. 13 shows a cross-section in accordance with fig. 12, the operating parts pertaining to the tens-shift clutch shown in a position releasing said clutch.

Fig. 14 shows a cross-section of a part of the machine, on line D—D of fig. 5, viewed in direction of the arrows, the operating parts controlling the printing-mechanism clutch as well as said clutch shown in rest position.

Fig. 15 shows a plan view in accordance with fig. 14, the operating parts controlling the printing mechanism clutch shown in a position releasing said clutch.

Fig. 16 shows another design of the locking device holding the printing mechanism clutch in rest position.

Fig. 17 shows a machine operating diagram.

General description of the machine

The machine consists of a frame **1**, only partly shown on fig. 5, which supports the operating parts and is concealed by a coverplate **2** (fig. 1). On the left side of the machine the motor is located which is likewise concealed by the coverplate **2** and is not shown on the illustration. On the same side are located the value keys **3** of a ten-key keyboard. Immediately to the right of this keyboard, the motor key **4** has been arranged. On the right side of the machine there are the different operating keys **5**.

Above the ten-key keyboard an inspection window **6** has been provided through which the respective values introduced into a sliding carriage, not shown on the illustration, by depressing the

keys 3 can be checked. Above the inspection window 6, two further inspection windows 7 and 8 have been provided through which the number rollers 9 and 10 of two totalizers are made visible.

A paper carriage 12 running lengthwise is arranged on the guiding rails 11 (only the front rail is visible on Fig. 1). The supporting rail 13 which is attached to the paper carriage 12, will accommodate any desired number of totalizers 14 in such a way that these are easily taken on and off.

Furthermore, in the frame 1 (Fig. 5) of the machine there is a printing mechanism 15 (Fig. 1) arranged, the types of which are made to print in known manner by means of a typewriting ribbon 17 around the roller 16 in the paper carriage 12. The ribbon 17 can be wound on, and unwound from, the two reels 18, respectively. The paper roller 16 can be suitably adjusted by means of the two turn-knobs 19.

The present invention relates to the control of the driving clutch 20 (Fig. 5), the tens-shift clutch 21 and the printing-mechanism clutch 22, all being operated in dependence of each other. Since these three clutches are essentially the same in design and construction, it is intended to further explain hereafter only the driving clutch 20.

Detailed description of the driving clutch

Mounted for rotation in the left side wall, not shown on the illustration, of the frame 1 (Fig. 5) as well as in the two intermediary walls 23 and 24 arranged in the frame 1, is a main driving shaft 25 and this shaft also supports the driving clutch 20, the tens-shift clutch 21 and the printing mechanism clutch 22.

As already mentioned under the heading "General description of the machine," it is intended hereafter only to explain the detailed construction of the driving clutch, the construction of the tens-shift clutch 21 and the printing-mechanism clutch 22 being identical.

Mounted for rotation on the main driving shaft 25 is a gear wheel 26 (Fig. 2 to 4). On the left side of this gear wheel there are certain circular segments 27, 28 and 28*a*, the last two of which are only half about as thick as the segment 27. A recess 29 is cut into the segments 28 and 28*a* as well as in the gear wheel 26. In this recess 29 there is a pin 30, attached to which is a spring 31 the other end of the spring being attached to the pin 32 of the clutch pawl 33. The pin 32 of the clutch pawl 33 extends into the recess 29 and can be moved therein. The extreme ends 34 and 35 of the clutch pawl 33 are of exactly the same thickness as the circular segment 27. The parts 34 and 35 are arranged to be moved back and forth in the interstices 36 and 37 formed by the circular segments 27, 28 on one side and 27*a*, 28*a* on the other side. The centre piece 38 (Fig. 3) of the clutch pawl 33 is of the same thickness as the two circular segments 28 and 28*a*. The centre piece 33 is formed with a projection 39 which is capable cooperating with the clutch levers 40 and 41 (Fig. 8), to be described later. The nose 39 of the clutch pawl 33 is arranged to be moved in two final positions within the recess 42 formed by the circular segments 28 and 28*a*.

Within the circular recess 43 (Fig. 4) formed by the circular segments 27, 28 and 28*a* (Figs. 2, 3 and 4) there is a clutch disk 44 arranged in fixed position on the main driving shaft 25 by the lug 45. The clutch disk 44 has a recess 46 which can be engaged by the lug 33*a* of the clutch pawl 33. The clutch pawl 33 and the clutch disk 44 are prevented from being displaced by means of a cover-disk 47 screwed on to the circular segment 27 by the screws 48.

Operating manner of the driving clutch

When depressing the motor key 4, the clutch lever 40 is moved clockwise (Fig. 8) and the lug 39 of the clutch pawl 33 is released by the lug 49 of the clutch lever 40. Furthermore by depressing the motor key 4, the motor which is not shown on the illustration, is started, causing the driving shaft 25 to revolve and to take along the clutch disk 44 (Fig. 4). As soon as the recess 46 of the clutch disk 44 has reached a point below the lug 33*a* of the clutch pawl 33, this lug 33*a* will engage the recess 46 of the clutch disk 44. By doing so, the parts 34 and 35 of the clutch pawl 33 also slide into the recesses 36 and 37. The movement of the clutch pawl in the direction of arrow 50 is stopped by the lower edge 51 of the clutch pawl 33 striking against the edge 52 (Fig. 2) of the recess 42 formed by the circular segments 28 and 28*a*.

After the parts 46 and 33*a* have thus become connected, the gear 26, being a part of the clutch, takes part in the revolving of the driving shaft 25. After half a turn of the driving clutch 20, the lug 39 of the clutch pawl 33 will run against the clutch lever 41 (Fig. 10) lying in the path of the lug 39. In consequence of this the clutch pawl 33 (Fig. 4) is moved against the action of the spring 31 in the opposite direction of the arrow 50, the upper edge of the lug 39 of the clutch pawl 33 being stopped only by striking against the edge 53 (Fig. 2) of the circular segment 28. When the clutch pawl 33 is moved in the opposite direction of the arrow 50, the lug 33*a* of the clutch pawl 33 leaves the segment 46 of the clutch disk 44 again, thus stopping the driving clutch 20. When the clutch lever 41 is moved in anti-clockwise direction (Fig. 10), it also releases the lug 39 of the clutch pawl 33, whereby the connection 46, 33*a* is resumed in the above-described manner and the driving clutch 20 is again affected by the revolving of the driving shaft 25. The separation of the driving clutch 20 from the driving shaft 25 is then again taking place, as described, after another half-turn through the action of the driving clutch lever 40, whereupon the driving clutch 20, having performed a complete revolution of 360° has resumed its rest position again, as shown in Fig. 8.

Detailed description of the operating parts of the driving clutch, tens-shift clutch and printing mechanism clutch

The key stem 54 with the motor key 4 on one end (Figs. 6, 8, 9, 10) is anchored with its other end in the coverplate 55 and the bottom-plate 56 of a key frame which is not shown in the illustration, so that it can be moved in a vertical direction. The key stem 54, furthermore, has at its lower end a projection 57 (Fig. 6) around which a spring 58 has been arranged. This spring 58 holds the key stem 54 with the motor key 4 in rest position into which it has been placed by the lug 59 striking against the coverplate 55 of the key frame from below.

A non-revolving shaft 61 is supported by the bracket 60 which is flanged to the bottom plate 56 of the key frame, as well as by the right side-wall 76 of the frame 1. On this shaft 61 a moveable trap 62 has been provided, as shown in Fig. 6, and, by the action of the spring 63 the

trap is moved clockwise to and fro (Fig. 8) around the shaft 61, whilst in its normal position the trap 62 lies flat against the lower edge 64 of the key stem 54. On the trap 62 there is an angle piece 65 (Fig. 6) fastened by a rivet which is not shown in the illustration. The free upward end 66 of the angle piece 65 is designed to engage with the part 67 projecting from the rod 68. The rod 68 (Figs. 6, 8, 10) is conducted through a slot 69 (Fig. 6) in an angle piece 70 which is fixed to the bottom plate of the machine frame in such a way that the rod 68 passing through the slot can be actuated in both directions of the arrow 71 as well as around its fulcrum 72. A spring 73 which is fastened on one end to the pin 74 of the rod 68 and on the other end to the lower extension of the angle piece 70, tends to hold the rod 68 against the lower edge of the slot 69 of the angle piece 70, when in normal position. A projection 75 (Figs. 6, 8, 9, 10, 11) is also flanged-on to the rod 68.

A revolving shaft 77 (Figs. 5, 6, 8, 9, 10, 11) is supported by the right side wall 76 (Fig. 5) and by the left side-wall (not shown in the illustration) of the machine frame 1. This shaft 77 has a U-shaped yoke 78 arranged on a pivot. The yoke 78 is moved clockwise by the action of the spring 79 which is attached at one end to the lower extension 80 of the yoke 78 (Fig. 11) and on the other end to the backwall 81 (Figs. 8, 9, 10) of the machine frame 1. The normal position of the yoke 78 will be dictated by the roller 83, which is attached to one leg bearing against the cam 84 (Fig. 6).

The cam 84 is fixed rigidly to a gear 85. The cam 84 and the gear 85 are rigidly mounted on a revolving shaft 86 which is supported by the intermediary wall 23 (Fig. 5) and the left sidewall (not shown in the illustration) of the machine frame 1. The gear 85 meshes with the gear 26. In both lower extensions 80 and 87 (Fig. 11) of the yoke 78 there is a pin 88 (Figs. 6, 8, 9, 10, 11) having a pawl 89 arranged on a pivot. A spring 90 is fastened on one end to the arm 90*a*, Fig. 11, of the pawl 89 and on the other end to the projection 91 of the leg 80 of the U-shaped member 78. By the action of this spring 90 the pawl 89 is actuated clockwise around the pivot 88. The normal position of the pawl 89 is fixed by the lug 92 striking against the edge 93, Fig. 8 of a lug 94 of the clutch lever 40 which is designed in U-shape and is mounted on the shaft 77. The lug 95, Fig. 11, of the pawl 89 engages with the extension 75 of the bar 68. The clutch lever 40 is fastened to the shaft 77 by a bolt 96 and is capable of cooperating by the lug 49 of its upwardly pointed arm with the lug 39 of the pawl 33 of the driving clutch.

A bolt 98, Fig. 6, is fastened in an intermediary wall 97, Figs. 5, 6, 8, 9 and 10, and an angle lever 99 is mounted to swing thereon. The lever 99 is moved clockwise around the bolt 98 by the action of a spring 100 which is attached on one end to the downwardly extending arm of the lever 99 and on the other end to a bolt 102 fastened in the intermediary wall 97. The lever 99 is stopped in its movement by a pin 103 which is likewise fastened in the intermediary wall 97. The rearwardly pointed arm of the lever 99 is capable of cooperating with the bolts 104 and 104*a* which are flanged to the gear 85. A shaft 105 is fixed rigidly in the right sidewall 76, Fig. 5, and in the left sidewall, not shown, of the machine frame 1. A U-shaped member 106, Fig. 7, is mounted for rotation on the shaft 105. A spring 107 which on one end is fastened to the downwardly pointed leg 108 of the U-shaped member 106 and on the other end is fastened in the backwall 81 of the machine frame 1, causes the U-shaped member 106 to turn clockwise around the shaft 105. The normal position of the U-shaped member is fixed by the roller 109 bearing against a cam 110 mounted on the printing mechanism clutch 22, Figs. 5, 14 and 15. The downwardly directed arm 111 of the U-shaped member 106 has a pawl 112 pivoted around the fulcrum 113. The bar 68 which has already been mentioned is jointed at the point 72. The lug 114 of the pawl 112 is capable of cooperating with the projection 115 of a downwardly pointed arm 116 of the U-shaped clutch lever 41. A spring 118 is attached on one end to the downwardly pointed arm 117 and with the other end in the backwall 81 of the machine frame 1. The clutch lever 41 is moved clockwise around the shaft 105 by the action of the spring 118. The normal position of the clutch lever 41 is fixed by the projection 115 of the arm 116 of the clutch lever 41 striking against the lug 114 of the pawl 112. In this normal position of the clutch lever 41 the arm 119 lies outside of the path of the projection 39 of the clutch pawl 33 of the driving clutch 20.

The clutch lever 41 has an arm 120 capable of engaging with a rod 121 which is fastened in the intermediary wall 24 and in the left sidewall, not shown, of the machine frame 1.

A pawl 123 is jointed to the arm 122 of the clutch lever 41 at the point 124 and formed with a projection 125 which is able to cooperate with a bolt 126, Figs. 8, 9, and 10, fixed to the gear 26 of the driving clutch 20. A pin 128 extending through a slot 127, Fig. 7, of the pawl 123 is secured to an arm 129 of a clutch lever 130 which is pivoted on the shaft 105, as shown in Fig. 7. A spring 132, Figs. 7, 14, 15, and 16, is fastened to one end of the arm 131 of the clutch lever 130 and with the other end is secured in the backwall 81 of the machine frame 1 for moving the clutch lever 130 clockwise around the shaft 105. The normal position of the clutch lever 130 is fixed by the arm 133 striking against the bar 121. In this normal position the arm 134 of the clutch lever 130 lies in the path of the projection 135 of a clutch pawl, not shown, which is installed in the printing-mechanism clutch 22.

A suitably shaped lever 136, Figs. 7, 14 and 15, is mounted to swing on the shaft 105. A spring 138 is fastened on one end to the arm 137 and on the other end to a pin 139 fastened in the rear-wall 81 of the machine frame 1. This spring 138 causes the lever 136 to swing around the shaft 105 anti-clockwise. The normal position of the lever 136 is fixed by the arm 140 of the lever 136 striking against the bar 121. The surface 141 of the arm 142 of the lever 136 engages with a roller 143 which is attached to the printing-mechanism clutch 22.

Another design of the lever 136 is shown in Fig. 16. This design differs from that shown in Fig. 15 only in that the arm 142 of the clutch lever 136, Fig. 16, has a roller 144 which bears on the cam 145 mounted on the printing-mechanism clutch 22. The gear 146, Figs. 14, 15 and 16, meshes with a gear for the printing mechanism, not shown and not belonging to the scope of the present invention. A pin 147, Figs. 4, 5, 8, 9 and 10, is mounted on the driving clutch 20 so as to cooperate with an arm 148 of a U-shaped member 149, Figs. 7, 12 and 13, which is mounted for rotation on the shaft 105. A spring 151 is connected to the arm 150 of the U-shaped mem-

ber 149 as well as to the rear wall 81 of the machine frame 1. By the action of this spring 151 the U-shaped member 149 is moved clockwise around the shaft 105. The normal position of the U-shaped member 149 is fixed by the arm 152 striking against the bar 121. A clutch lever 153 is also mounted for rotation on the shaft 105.

A spring 155 is fastened on one end to the pin 154, Figs. 7, 7*a*, 12, and 13, of the clutch lever 153 and on the other end to a pin 156 of the arm 150 of the U-shaped member 149. By the action of this spring 155, the clutch lever 153 is moved anti-clockwise around the shaft 105 until the edge 157 of the arm 158, Fig. 7*a*, of the clutch lever 153 strikes against the pin 156. The arm 159 of the clutch lever 153 cooperates with the bar 121 whilst the arm 160 of the clutch lever 153 engages with the lug 161 of a clutch pawl, not shown, installed in the tens-shift clutch 21. Mounted to rotate with its U-shaped member on the bar 121, Figs. 7, 7*a*, 12 and 13, in a lever 162 the projection 163 of which is able to cooperate with the edge 157 of the arm 158 of the clutch lever 153. A pin 165 fixed to the arm 117, Fig. 7, of the clutch lever 41 extends through the slot 164 of the lever 162.

A gear 166 of the tens-shift clutch, Figs. 12 and 13, meshes with the gear 167 which is mounted on a shaft 96 installed in the intermediary wall 23 and the left side-wall, not shown, of the machine frame 1.

Pivoted on a pin 98, Figs. 12 and 13, is an angle lever 168, moved clockwise around the pin 98 by the action of a spring 169 which is fastened on one end to the downwardly pointed arm of the angle lever 168 and on the other end to a pin 102. The normal position of the angle lever 168 is fixed by striking against the pin 103. The rearwardly extending arm of the angle lever 168 is capable of cooperating with a pin 170 attached to the gear 167.

Device for separating the motor key from the system of rods controlling the driving clutch

A lever 172 is fastened by a bolt, 171, Figs. 6, 8, 9, and 10, on the shaft 77. A connecting rod 173 is jointed to lever 172 on one end and jointed to an arm 174 of the U-shaped member 175 on its other end. The U-shaped member 175 is mounted to swing with one end on a bolt 176 which extends through the arm 174 in the right side wall 76 of the machine frame 1, and with the other end by its arm 177 on a shaft 180 which is fastened to the bottom plate 56 of the key frame by angle irons 179 held by bolts 178. A pin 181 which cooperates with the bar 68 is fastened to the arm 177 of the U-shaped member 175.

The parts 172, 77, and 40, Fig. 11, are moved clockwise by the action of a spring 182 which on one end is fastened to a lug 183 of a connecting rod 173 and on its other end to a pin 184 fastened in the right side-wall 76 of the machine frame 1. The normal position of these parts is fixed by the lug 93*a*, Fig. 11, striking against the catch 92 of the pawl 89, as the U-shaped member 78 with the pawl 89 cannot move clockwise around the shaft 77 owing to the roller 82 bearing against the cam 84.

Operation of the members for the driving clutch, the tens-shift clutch and the printing-mechanism clutch

When depressing the motor key 4, Figs. 1, 5, 6, 8, 9, and 10, the key lever 54 is moved downward against the action of spring 58. During this operation, the lower edge 64 of the key slide 54 engages the trap 62. Consequently, the trap 62 is moved anti-clockwise, Fig. 9, around the shaft 61 against the tension of the torsion spring 63. The angle piece 65 mounted on the trap 62, during the movement of the trap 62 engages with its lug 66 the member 67 of the bar 68 which is thus moved in the direction of arrow 71 against the tension of the spring 73. During this operation, the member 75, Fig. 6, 8 and 11, attached to the bar 68, engages the lug 95 of the pawl 89, moving same around the pin 88 anti-clockwise, Fig. 11, against the tension of the spring 90. When the pawl 89 is moved anti-clockwise, the lug 92 of the pawl 89 releases the projection 93*a* of the clutch lever 40 which is rigidly mounted on the shaft 77. Thereby the spring 182 which is fastened to the connecting rod 173, Fig. 6, operates the clutch lever 40 in clockwise direction by way of the lever 172 and the shaft 77. During this operation the projection 49, Fig. 8, of the clutch lever 40 releases the lug 39 of the clutch pawl 33 installed in the driving clutch 20, whereupon the driving clutch 20 is connected with the driving shaft 25, as has already been described under the heading "Operation of the driving clutch," so that the driving clutch 20, after a contact (not shown) has been closed, will take part in the revolution of the driving shaft.

When the shaft 77 and the lever 172 rigidly mounted thereon are moved, the connecting rod 173, Fig. 6, is turned against the direction of arrow 71, whereby the U-shaped member 175 which is jointed to the front end of the connecting rod 173 is moved clockwise around the bolt 176 and the shaft 180. During the operation the pin 181 of the U-shaped member 175 acts upon the slide 68 from below so that the slide 68 is moved around its joint 72 anti-clockwise and against the tension of the spring 73. During this movement the member 67 of the slide 68 releases the angle piece 65 of the trap 62, whereby the connection from the motor key 4 to the driving clutch 20 is broken. Should the motor key 4 again be depressed or be kept in depressed condition, a second release of the driving clutch 20 during the calculating operation has become impossible, since during the second depression of the motor key 4 the angle piece 65 is moved below the member 67 of the slide 68 without making contact when the trap 62 is moved. After the motor key 4 has been released by the operator, the trap 62 under action of the torsion spring 63 and the motor key 4 under action of the spring 58 will resume the rest position shown in Fig. 8 during which the normal position of the motor key 4 is fixed by the lug 59 of the key slide 54 striking against the coverplate 55 of the key frame from below.

When the bar 68 is moved in the direction of arrow 71, the pawl 112, Figs. 6, 7, 8, 9 and 10, which is jointed to the slide 68, is moved clockwise around the pivot 113 from the position shown in Fig. 8 into the position shown in Fig. 9. During this operation, the lug 114 of the pawl 112 releases the projection 115 of the arm 116, Fig. 7, of the U-shaped clutch lever 41, so that this lever 41 is moved clockwise around the shaft 105 by the tension of the spring 118. The movement of the clutch lever 41 is stopped by the arm 120 striking against the bar 121. By the clockwise movement of the clutch lever 41 the projection 114 of the pawl 112 strikes against the surface

115*a*, Fig. 7, of the lug 115 of the clutch lever 41 from below, Fig. 9. During the movement of the clutch lever 41, its arm 119 is brought into the path of the lug 39 of the clutch pawl 33 of the driving clutch 20.

During the clockwise movement of the clutch lever 41, Fig. 7, around the shaft 105, the pawl 123 which is mounted on the arm 122 is also moved anti-clockwise around the pin 128 of the arm 129 of the clutch lever 130, which pin now acts as a fulcrum causing the lug 125 of the pawl 123 to get into the path of the pin 126, Fig. 9, of the driving clutch. Owing to the clockwise movement of the clutch lever 41, the lever 162 which is mounted to rotate on the bar 121 over the pin 165, Fig. 7, of the arm 117, is moved clockwise around the bar 121 whereby the lug 163 of the clutch 162 is brought in front of the edge 157 of the clutch lever 153, Fig. 13, which is mounted for rotation on the shaft 105 and controls the tens-shift clutch 21, Fig. 5.

As soon as the driving clutch 20 starts turning in the direction of arrow 185, Fig. 8, at 0°, Fig. 17, the gear 85 is revolved through the gear 26 in the direction of arrow 186. The cam 84 which is rigidly mounted on the gear 85 partakes in this movement. When the cam 84 is revolved in direction of the arrow 186 the roller 83 which is fixed to the arm 82, Fig. 6, of the U-shaped member 78 slides off the raised part of the cam 84 and, by sliding along the surface 188 of the cam 84 under the action of the spring 79, after the first half-turn of the driving clutch 20 comes to lie upon the concentric part of the cam 84. During this operation, the U-shaped member 78 and the pawl 89 which is supported by the arms 80 and 87 is moved clockwise around the shaft 77. Furthermore, the lug 92 of the pawl 89 slides along the edge 189, Fig. 9, of the clutch lever 40 in the direction of the lug 93*a* until the lug 92 of the pawl 89 under the action of the spring 90 is engaged behind the lug 93*a* of the clutch lever 40 and thereby assumes the position shown in Fig. 8.

When the gear 85, Fig. 8, starts turning in the direction of arrow 186, the pin 104 which is mounted on the gear 85 will leave the surface 190 of the lever 99, whilst this lever 99 under action of the spring 100 with its downward pointed part engages a pin 103 and remains in its normal position shown in Fig. 8.

Shortly before a half-turn of the gear 85 has been completed, the pin 104*a* engages the edge 191 of the lever 99 turning it anti-clockwise around its pivot 98 against the action of the spring 100 until the pin 104*a* slides over the edge 192 of the lever 99. Under the tension of the spring 100, the lever 99 is moved clockwise again around the pin 98 and the surface 190 of the lever 99 now lies against the pin 104*a* of the gear 85, whereby the driving clutch 20 is prevented from turning back against the direction of arrow 186 of the clutch pawl 33 installed in the driving clutch 20, under the action of the spring 31.

Before the driving clutch 20 has completed its first half-turn, a pin 147 attached to the driving clutch 20, Figs. 8, 9, 10, will engage the edge 193, Figs. 12 and 13, of the arm 148 of the U-shaped member 149, Figs. 7 and 7*a*, whereby the pin 147 is moved anti-clockwise around the shaft 105 against the spring 151. When the driving clutch 20 has completed its first half-turn of 180°, Fig. 17, the pin 147 of the driving clutch 20 falls into the recess 194 of the arm 148 of the U-shaped member 149 and holdes the latter in its changed position. When the U-shaped member 149 has been moved anti-clockwise, the spring 155, which is fastened on one end to the pin 156 of the arm 150 of the U-shaped member 149 and on the other end is attached to a pin 154 of the clutch lever 153, is expanded since, as has been described, the clutch lever 153 cannot be influenced by the spring 155 owing to the lever 162 blocking it.

Shortly before the first half-turn of the driving clutch 20 has been completed, the pin 126, Fig. 9, which is fastened on the gear 26, will engage the lug 125 of the pawl 123, moving the latter clockwise around the pivot 124. During this operation, the clutch lever 130, Fig. 7, which is mounted for rotation on the shaft 105, is moved clockwise over the pin 128 around the shaft 105 against the spring 132 from its position shown in Fig. 15. Simultaneously the arm 134 of the clutch lever 130 releases the lug 135 of the clutch pawl which is installed in the printing-mechanism clutch 22, Fig. 5, and lifts the arm 133 of the clutch lever 130 from the bar 121. Consequently the printing-mechanism clutch 22 can now take part in the revolution of the driving shaft 25. Simultaneously the lug 39 of the clutch pawl 33 of the driving clutch 20 strikes against the arm 119, Fig. 10, of the clutch lever 41, whereby the driving clutch 20 is separated from the driving shaft 25, as has been described under the heading "Operation of the driving clutch," and the driving clutch comes to a stop after a turn of 180°, Fig. 17.

The cam 110, Figs. 14 and 15, also partakes in the movement of the printing-mechanism clutch 22 to which it is rigidly fastened. Simultaneously the roller 109, Fig. 7, of the U-shaped member 106 slides down the slope 195, Fig. 14, of the cam 110, whereby the U-shaped member 106, Fig. 6, under the action of the spring 107 is moved clockwise around the shaft 105 from the position shown in Fig. 9 into the position shown in Fig. 10.

During the clockwise movement of the U-shaped member 106, the lug 114 of the pawl 112 slides along the edge 115*a* of the projection 115 of the clutch lever 41 and catches below the spring 73, which is fastened to the bar 68, behind the lug 115 of the clutch lever 41, Fig. 10.

This would mean that the pawl 112 partakes in the clockwise movement of the U-shaped member 106, whereby the bar 68 is moved in the direction of arrow 71. Simultaneously the lug 75 of the pawl 112 engages again the lug 95 of the pawl 89 and moves the latter around the pin 88 against the spring 90 from the position shown in Fig. 9 into the position shown in Fig. 10.

Shortly before a complete revolution of the printing-mechanism 22 has been made, the roller 143, which is mounted on the printing-mechanism clutch 22, Figs. 14 and 15, engages the edge 197 of the multiple arm U-shaped member 136, Fig. 7, and causes the latter to be moved clockwise around the shaft 105 against the spring 138. As soon as the roller 143 of the printing-mechanism clutch 22 slides over the edge 198 of the arm 142 of the U-shaped member 136, the latter is turned clockwise again around the shaft 105 by the action of the spring 138. Simultaneously the surface 141, Fig. 14, of the U-shaped member 136 engages the roller 143 of the printing-mechanism clutch 22 and holds it in the position of rest shown in Fig. 14. Winding back of the printing-mechanism clutch 22 under the ac-

tion of the spring, not shown, which is fastened to the clutch pawl of the printing-mechanism clutch 22, is therefore not possible.

Approximately after a half-turn of the printing-mechanism clutch 22 and of the cam 110, the U-shaped member 106, Figs. 6 and 7, is moved anti-clockwise around the shaft 105 away from the cam 110, Fig. 14, and against the spring 107. During this operation, the lug 114, Fig. 8, of the pawl 112 engages the lug 115 of the clutch lever 41 of the driving clutch, whereby the clutch lever 41 is moved anti-clockwise around the shaft 38 against the action of the spring 118. The bar 68 is thus moved against the direction of arrow 71 and slides along the pin 181 of the U-shaped member 175 which is still moved clockwise. When the bar 68 is moved against the direction of arrow 71, the lug 75, Fig. 6, of the bar 68 releases the lug 95 of the clutch pawl 89. Consequently the pawl 89 is free to move clockwise around the pin 88 under the action of the spring 90 and the pawl 89 is brought from the position shown in Fig. 10 into the position shown in Fig. 8 with respect to the lug 93*a* of the clutch lever 40.

Immediately before completing a revolution of 360°, Fig. 17, of the printing-mechanism clutch 20, the arm 119 of the clutch lever 41 owing to the anti-clockwise movement of the clutch lever 41 around the shaft 105 releases the clutch pawl 33 which is arranged in the driving clutch 20, so that the driving clutch 20 can again take part in the movement of the driving shaft 25.

During the anti-clockwise movement of the clutch lever 41 the arm 122 of the clutch lever 41 is moved in the same direction. Simultaneously the lug 125 of the pawl 123 slides off below the pin 126 of the gear 26, whereupon the pawl 123 is moved from the position shown in Fig. 10, into the position shown in Fig. 9, namely, by the action of the pin 128, Fig. 7, of the clutch lever 130 which is moved clockwise around the shaft 105 by the action of the spring 132. Simultaneously the arm 134 of the clutch lever 130 is moved again into the path of the clutch pawl arranged in the printing mechanism clutch 22, which causes the printing-mechanism clutch 22 to be arrested after a turn of 360°, Fig. 17.

During the anti-clockwise movement of the clutch lever 41 the pin 165, Figs. 7 and 7*a*, which is attached to the arm 117 of the clutch lever 41, bears on the lower edge 193, Fig. 13, of the slot 164 of the lever 162, which causes the lever 162 to be moved anti-clockwise around the bar 121. During this movement, the lug 163 of the lever 162 releases the edge 157 of the clutch lever 153 of the tens-shift clutch and at that moment the clutch lever 153 is moved anti-clockwise around the shaft 105 by the action of the spring 155 which has been expanded by the U-shaped member 149. Owing to the movement of the clutch lever 153, its arm 160 releases a clutch pawl, not shown, which is arranged in the tens-shift clutch 21, so that both members, the tens-shift clutch 21 and the driving clutch 20 participate in the movement of the driving clutch 25.

During the movement of the driving clutch (second half turn) the cam 84 is moved in the direction of arrow 186 by means of the gears 26, 85, Fig. 8. Simultaneously the surface 199 of the cam 84 bears on the roller 83, Fig. 6, of the U-shaped member 78, whereby this member 78 as well as the pawl 89 are moved anti-clockwise around the shaft 77. During this movement the lug 92 of the pawl 89 engages the lug 93*a* of the clutch lever 40, Fig. 11, and tends to move it in an anti-clockwise direction, whereby the lug 49 of the clutch lever 40 is again thrown into the path of lug 39 of the clutch pawl 33 which is arranged in the driving clutch 20 and thereby causes the driving clutch 20 to be arrested after the second half-turn of 180°, Fig. 17.

The gear 85 also participates in the movement of the driving clutch 20 by means of gear 26. Shortly before the second half-turn of the driving clutch 26 as well as of the gear 85 in the direction of arrow 186 has been completed, the pin 104 of the gear 85 bears on the edge 191 of the lever 99 and tends to move it anti-clockwise against the spring 100. As soon as the pin 104 slides off the edge 192 of the lever 99, this lever 99 is again moved clockwise by the action of the spring 100 and the edge 190 of the lever 99 again comes to lie before the pin 104, Fig. 8.

After the second half-turn of the driving clutch 20 has been completed, the roller 83 of the U-shaped member 78 lies again on the raised part of the cam 84.

During the second half-turn of 180°, Fig. 17, of the driving clutch 20, the pin 147, Figs. 8, 9, 10, 12 and 13, again releases the arm 148 of the U-shaped member 149, Fig. 7*a*, whereby this member 149 is moved clockwise around the shaft 105 by the action of the spring 151.

Simultaneously the pin 156 fastened to the arm 150 of the U-shaped member 149 bears on the edge 157 of the clutch lever 153 and tends to move the latter in clockwise direction around the shaft 105. During this movement, the arm 160 of the clutch lever 153 again comes to lie in the path of the clutch pawl arranged in the tens-shift clutch 21, which causes the tens-shift clutch 21 to be arrested after a turn of 360°, Fig. 17.

During the movement of the U-shaped member 78, Figs. 6 and 11, in an anti-clockwise direction, in which also the shaft 77 participates the U-shaped member 175 is moved anti-clockwise by means of the lever 172, Fig. 6, and the bar 173. Simultaneously the pin 181 releases the bar 68, so that this bar 68 is moved downwards around the pivot 72 by the action of the spring 73. Consequently the member 67 is again placed in position towards the angle piece 65 of the trap 62, whereby the connection between the motor key 4 and the driving clutch 20 has been reestablished.

Shortly before the full turn of the tens-shift clutch 21, Figs. 12 and 13, has been completed, the pin 170 mounted on the gear 167 engages the edge 200 of the lever 168 and moves the latter anti-clockwise against the spring 169. As soon as the pin 170 of the gear 167 has moved past the edge 201 of the lever 168, the lever 168 is moved clockwise by the action of the spring 169 and with its surface 202 bears against the pin 170 of the gear 167, whereby any turning backwards of the tens-shift clutch 21 is prevented by the clutch pawl which is arranged in the tens-shift clutch 21 subjected to the action of a spring.

The apparatus of the present invention has been described in detail with reference to specific embodiments. It is to be understood, however, that the invention is not limited by such specific reference but is broader in scope and capable of other embodiments than those specifically described and illustrated in the drawing.

AUGUST FRIEDRICH POTT.

PUBLISHED A. F. POTT Serial No.

MAY 25, 1943. CONTROL GEAR FOR CLUTCHES IN ADDING MACHINES 326,111

BY A. P. C. Filed March 26, 1940 12 Sheets-Sheet 1

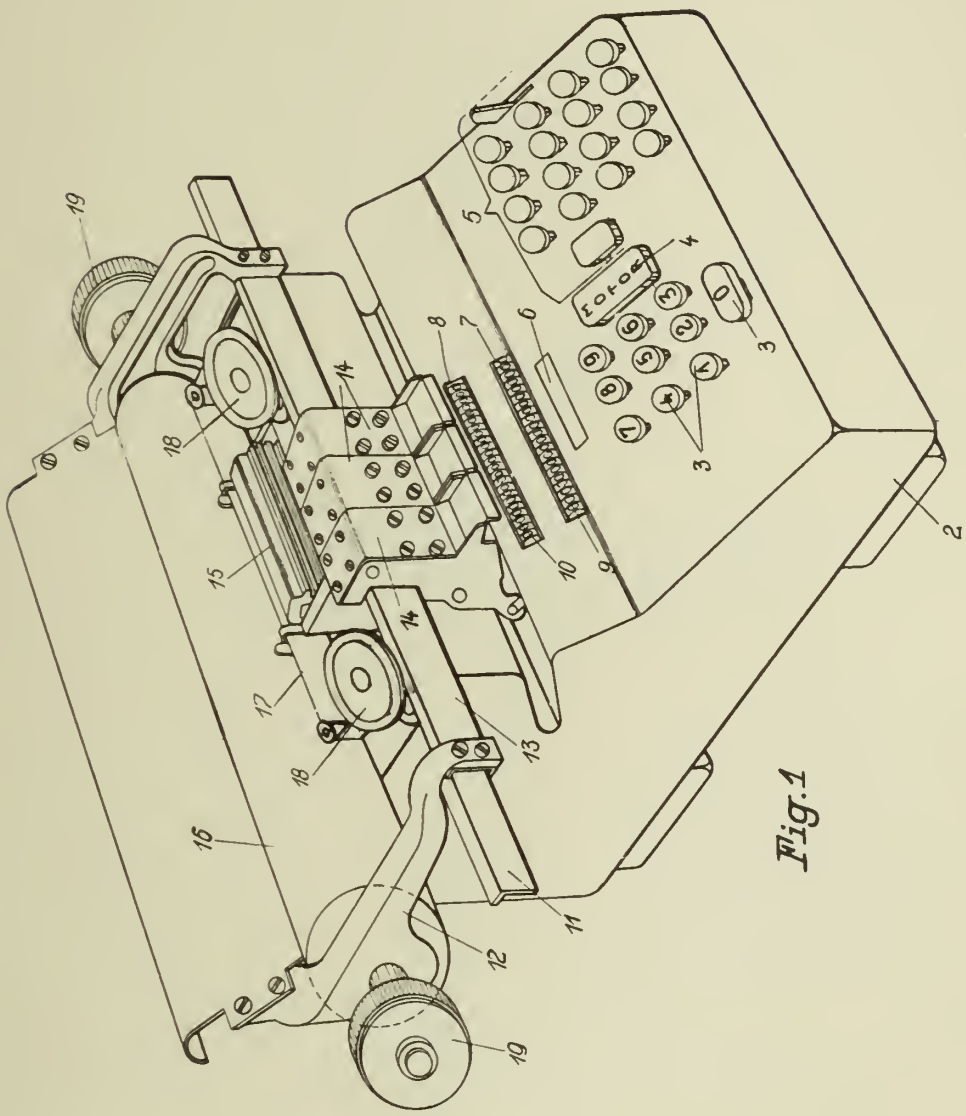

Fig. 1

Inventor:
A. F. Pott

By: Glascock Downing & Seebold
Attys

PUBLISHED A. F. POTT Serial No.

MAY 25, 1943. CONTROL GEAR FOR CLUTCHES IN ADDING MACHINES 326,111

BY A. P. C. Filed March 26, 1940 12 Sheets-Sheet 2

Fig.2

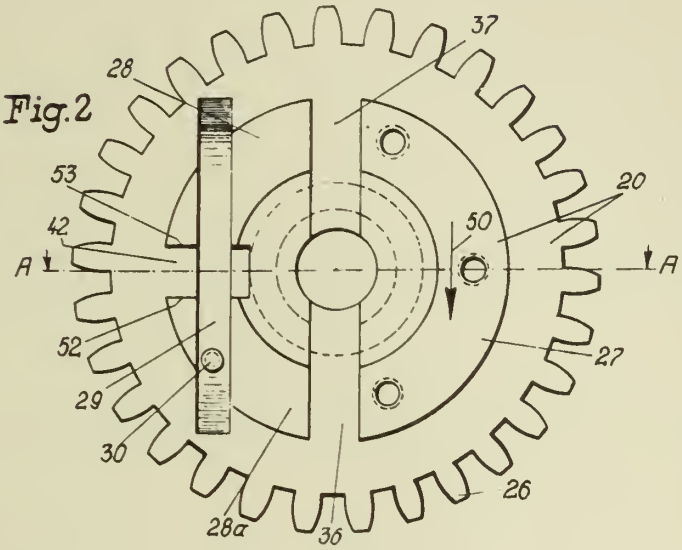

Fig.3

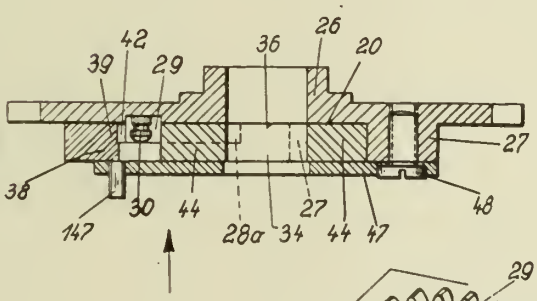

Fig.4

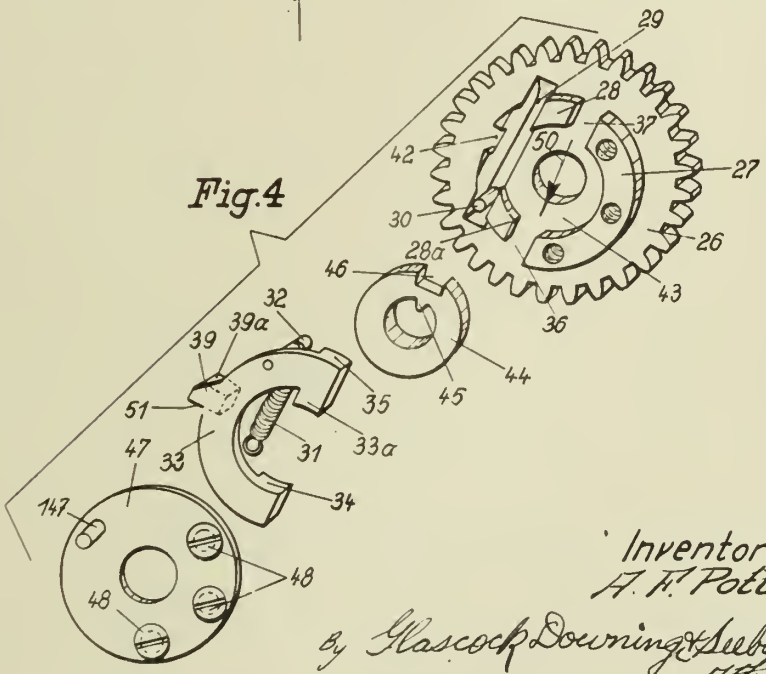

Inventor:
A. F. Pott

By Glascock Downing & Seebold
Attys.

PUBLISHED A. F. POTT Serial No.

MAY 25, 1943. CONTROL GEAR FOR CLUTCHES IN ADDING MACHINES 326,111

BY A. P. C. Filed March 26, 1940 12 Sheets-Sheet 3

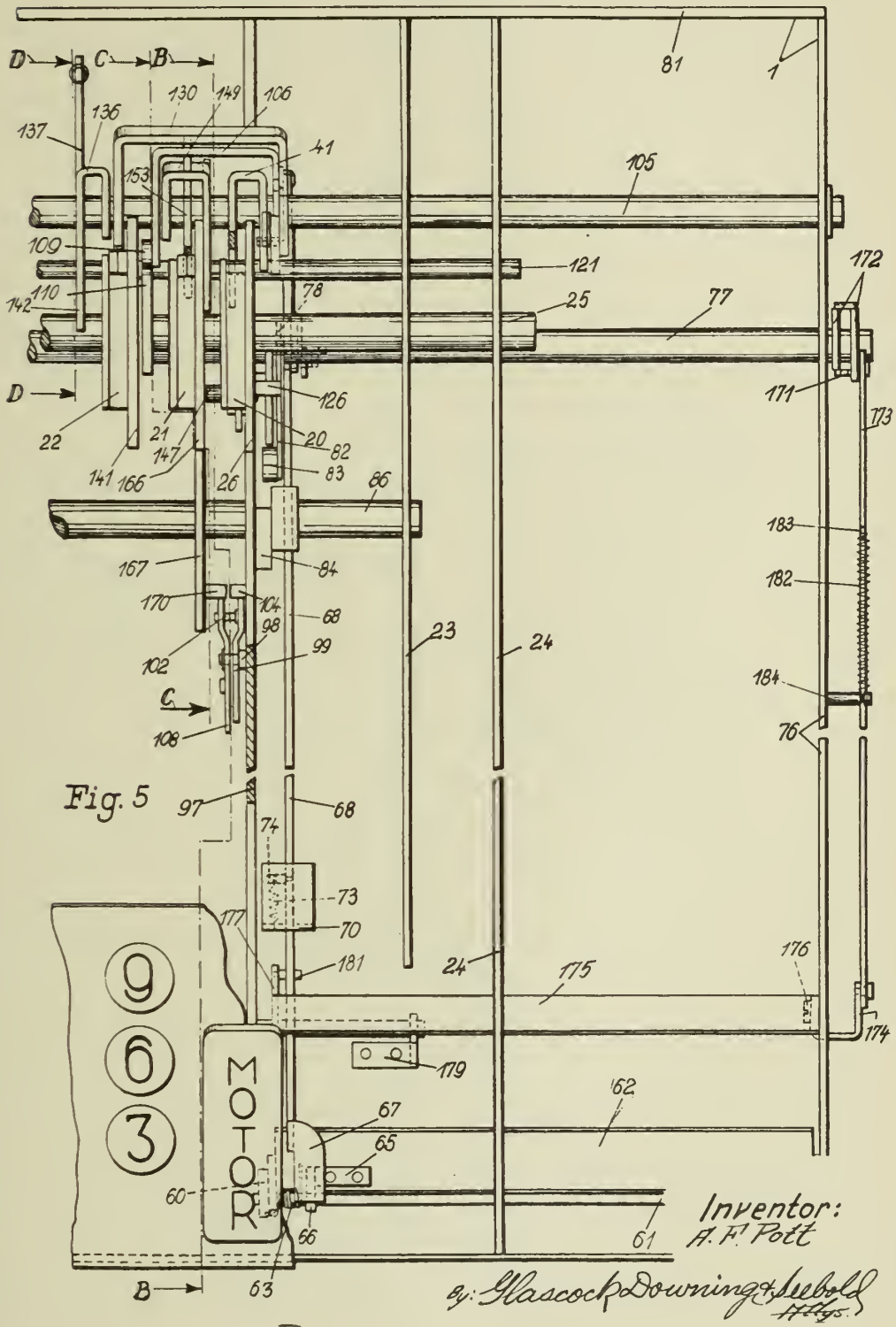

PUBLISHED A. F. POTT Serial No.

MAY 25, 1943. CONTROL GEAR FOR CLUTCHES IN ADDING MACHINES 326,111

BY A. P. C. Filed March 26, 1940 12 Sheets-Sheet 4

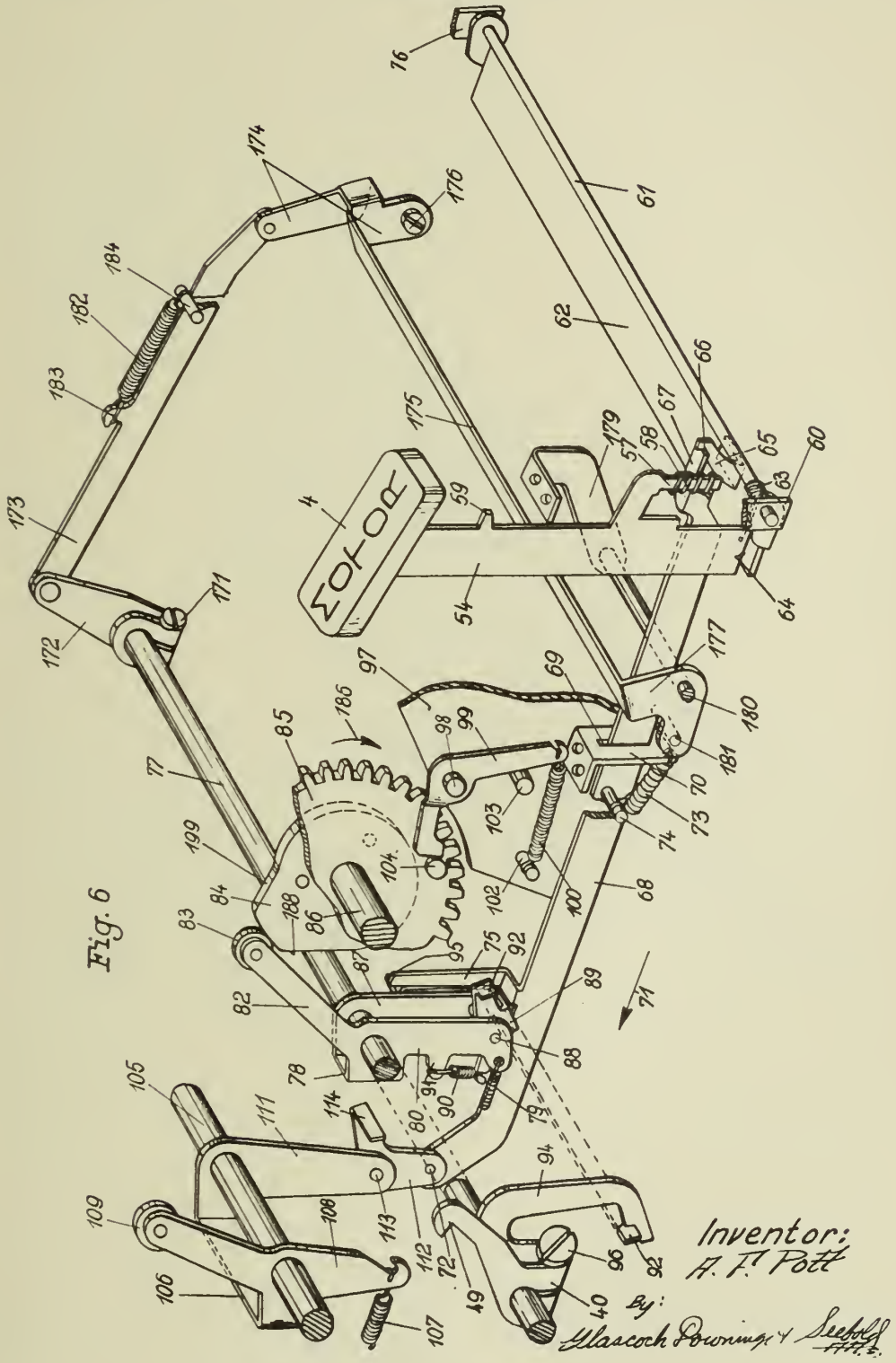

PUBLISHED A. F. POTT Serial No.

MAY 25, 1943. CONTROL GEAR FOR CLUTCHES IN ADDING MACHINES 326,111

BY A. P. C. Filed March 26, 1940 12 Sheets-Sheet 5

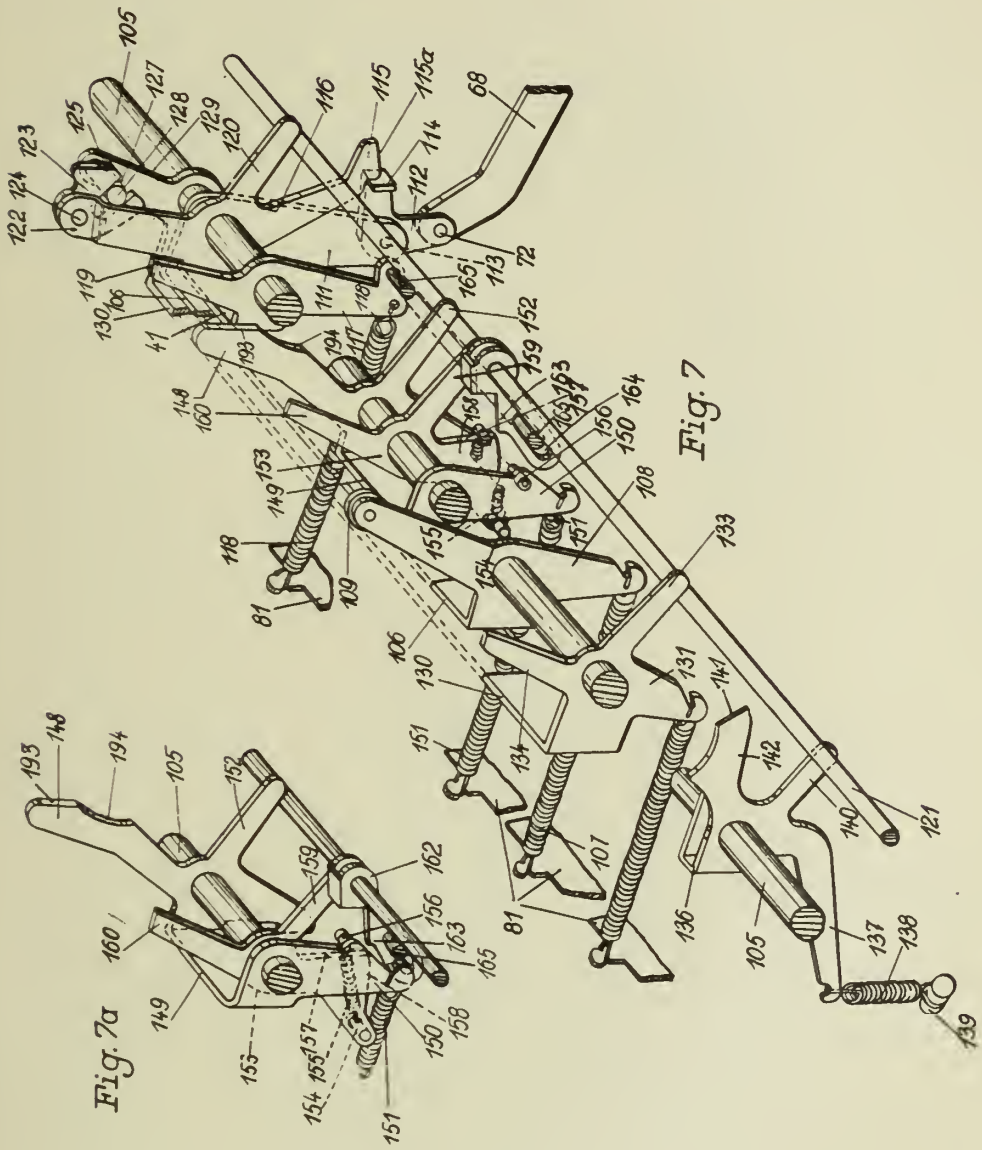

Inventor:
A. F. Pott
By: Glascock Downing & Seebold
Attys

PUBLISHED A. F. POTT Serial No.

MAY 25, 1943. CONTROL GEAR FOR CLUTCHES IN ADDING MACHINES 326,111

BY A. P. C. Filed March 26, 1940 12 Sheets-Sheet 6

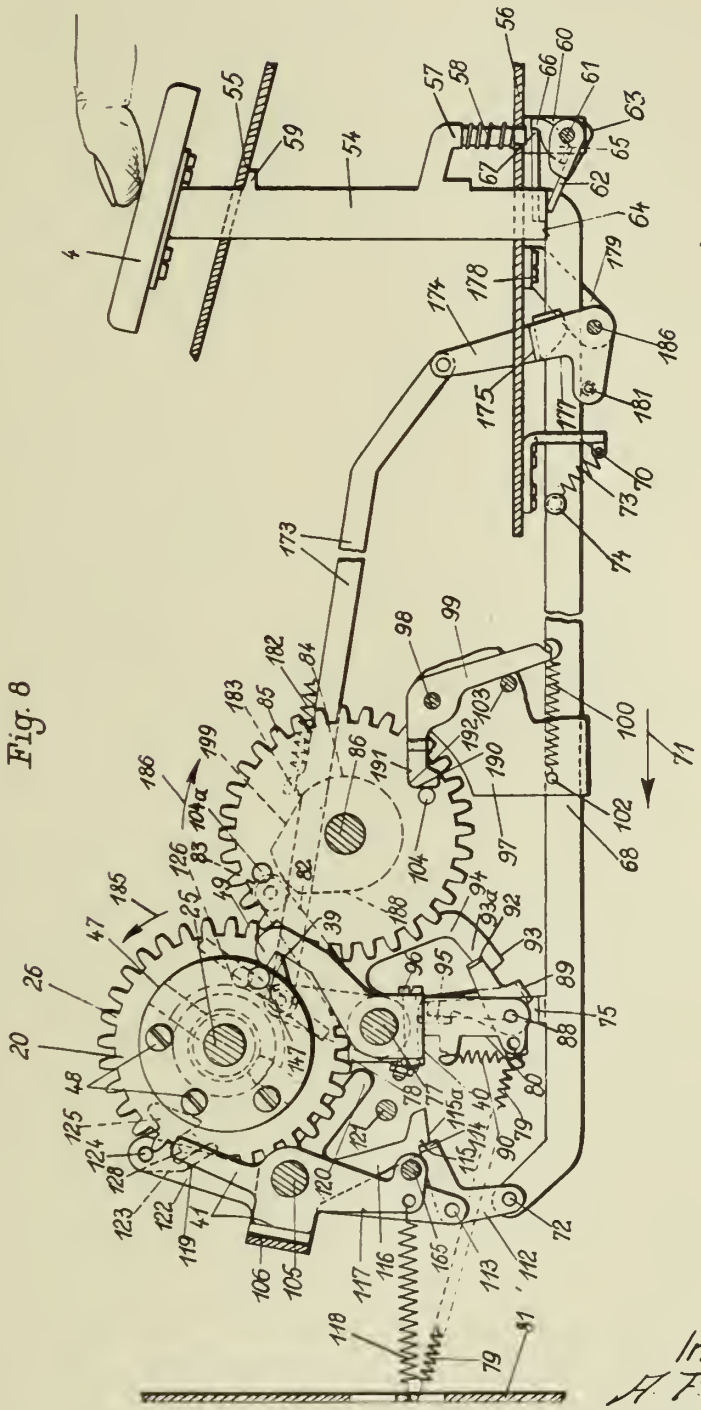

Fig. 8

Inventor:
A. F. Pott

By Glascock Downing & Seebold
Attys.

PUBLISHED A. F. POTT Serial No.

MAY 25, 1943. CONTROL GEAR FOR CLUTCHES IN ADDING MACHINES 326,111

BY A. P. C. Filed March 26, 1940 12 Sheets-Sheet 7

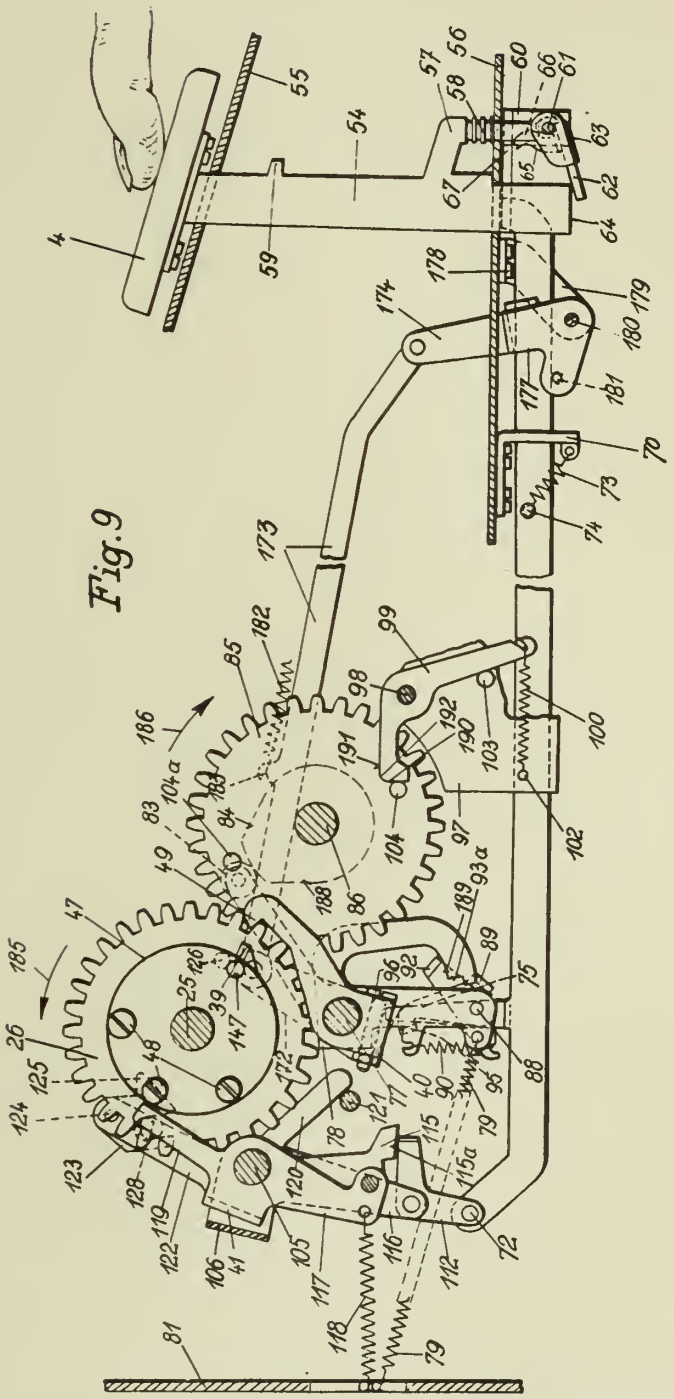

Fig. 9

Inventor:
A. F. Pott
By: Glascock Downing & Seebold
Attys.

PUBLISHED A. F. POTT Serial No.

MAY 25, 1943. CONTROL GEAR FOR CLUTCHES IN ADDING MACHINES 326,111

BY A. P. C. Filed March 26, 1940 12 Sheets-Sheet 8

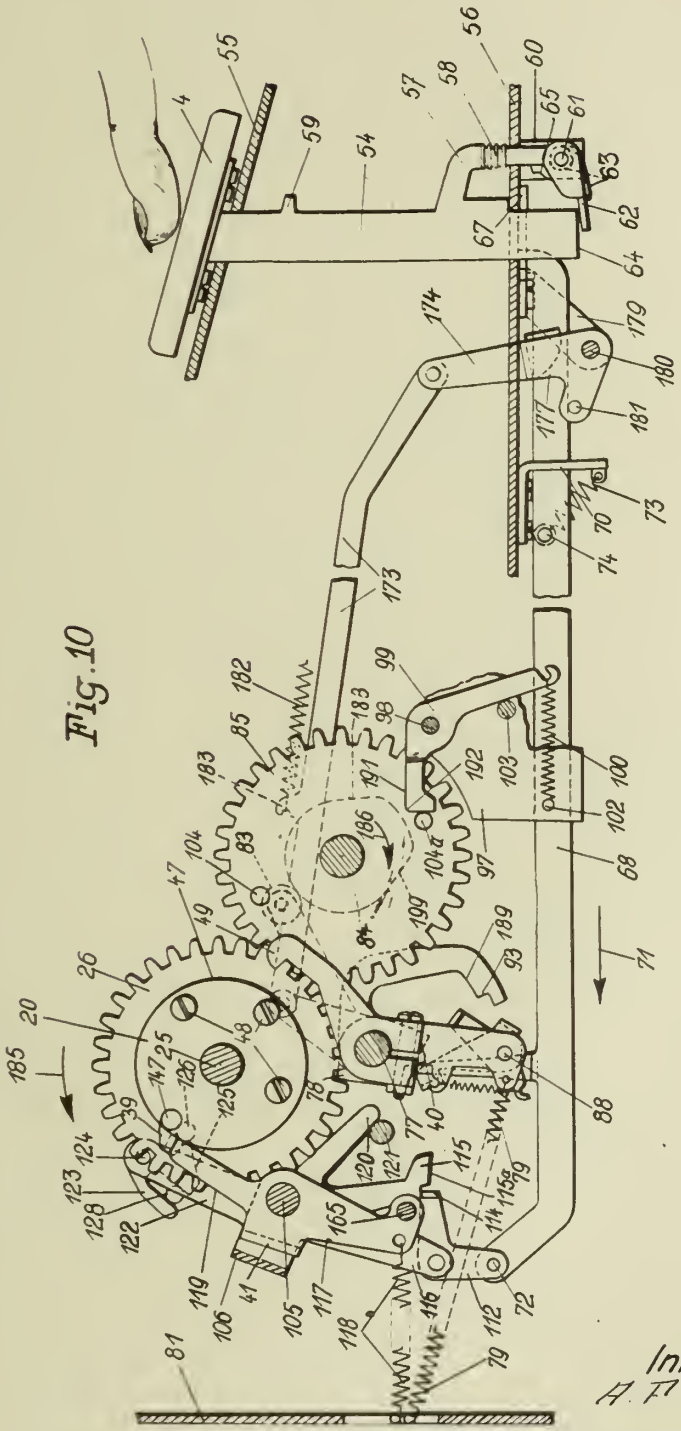

Fig. 10

Inventor:
A. F. Pott

By: Glascock Downing & Seebold
Attys.

PUBLISHED A. F. POTT Serial No.

MAY 25, 1943. CONTROL GEAR FOR CLUTCHES IN ADDING MACHINES 326,111

BY A. P. C. Filed March 26, 1940 12 Sheets-Sheet 9

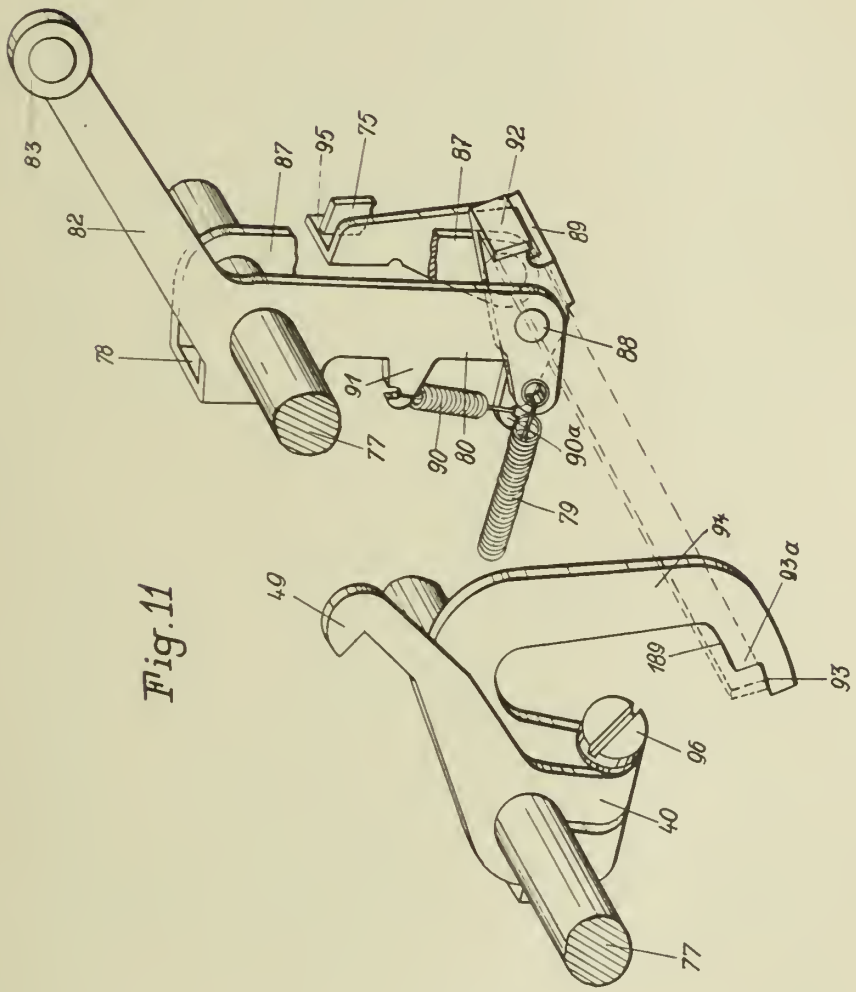

Fig. 11

Inventor:
A. F. Pott

By: Glascock Downing & Seebold
Attys.

PUBLISHED A. F. POTT Serial No.

MAY 25, 1943. CONTROL GEAR FOR CLUTCHES IN ADDING MACHINES 326,111

BY A. P. C. Filed March 26, 1940 12 Sheets-Sheet 10

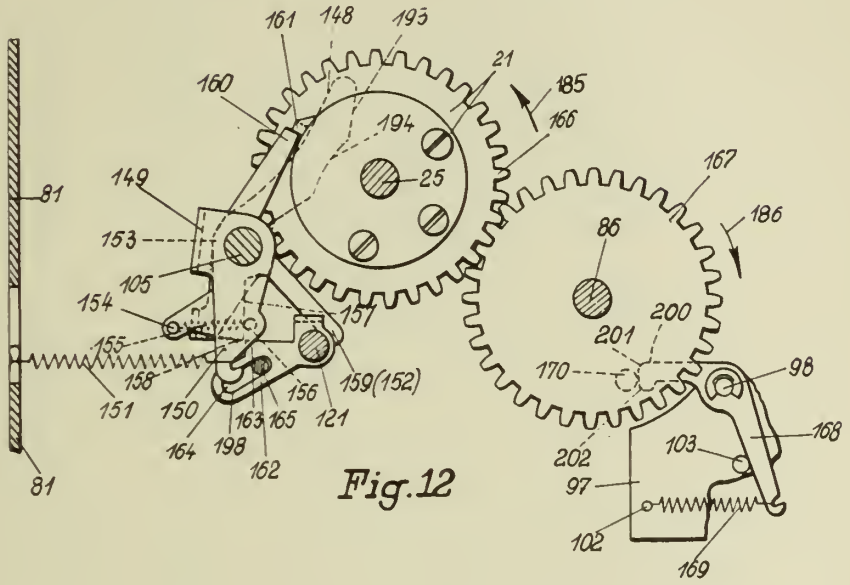

Fig. 12

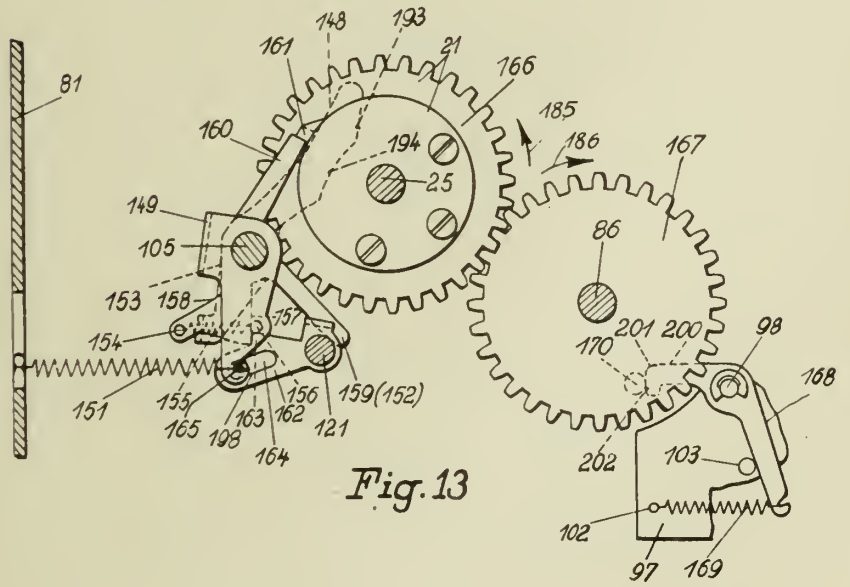

Fig. 13

Inventor:
A. F. Pott
By: Glascock Downing & Seebold
Attys.

PUBLISHED A. F. POTT Serial No.

MAY 25, 1943. CONTROL GEAR FOR CLUTCHES IN ADDING MACHINES 326,111

BY A. P. C. Filed March 26, 1940 12 Sheets-Sheet 13

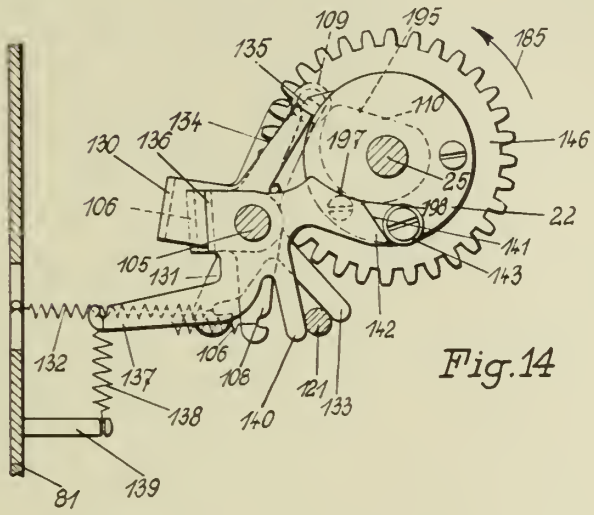

Fig.14

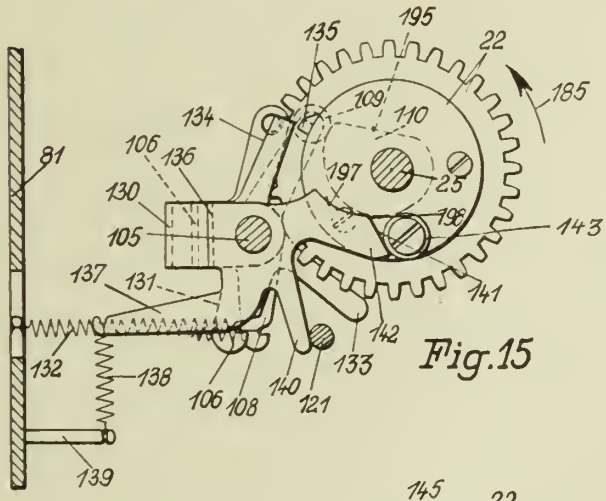

Fig.15

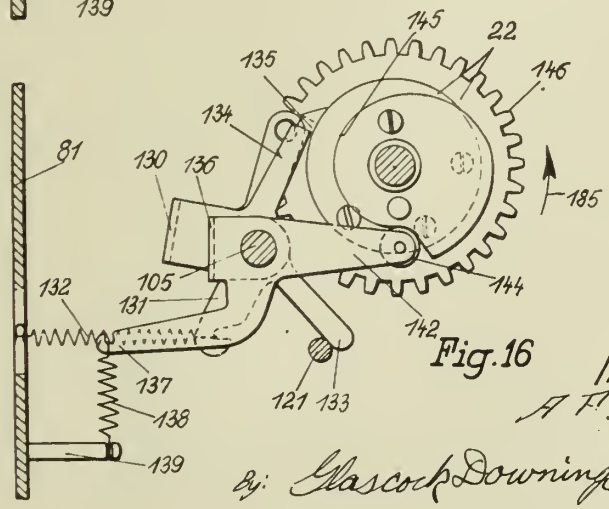

Fig.16

Inventor:
A. F. Pott

By: Glascock Downing & Seebold
Attys.

PUBLISHED A. F. POTT Serial No.

MAY 25, 1943. CONTROL GEAR FOR CLUTCHES IN ADDING MACHINES 326,111

BY A. P. C. Filed March 26, 1940 12 Sheets-Sheet 12

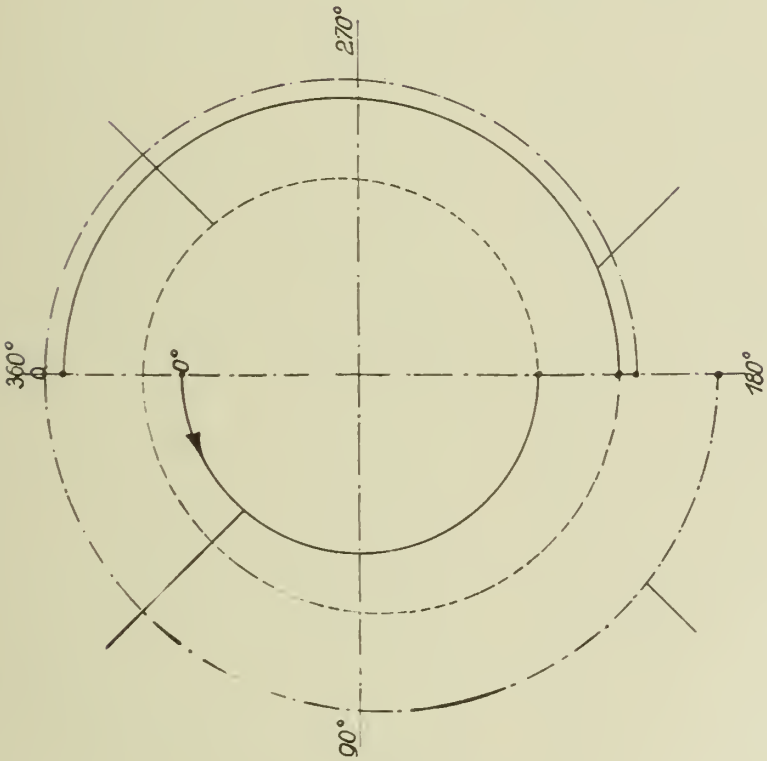

Fig. 17

Inventor:
A. F. Pott
By Glascock Downing & Seebold
Attys.

Published May 25, 1943

Serial No. 326,529

ALIEN PROPERTY CUSTODIAN

DEVICES FOR ABSORBING SHOCKS ESPECIALLY FOR PARACHUTE

René Tauty, Clichy, France; vested in the Alien Property Custodian

Application filed March 28, 1940

The present invention relates to devices for absorbing shocks, and it is more especially, although not exclusively, concerned with devices for use in connection with parachutes or the like for absorbing the shock resulting from the opening of the parachute.

The chief object of the present invention is to provide a shock absorbing device of the type above described which is better adapted to meet the requirements of practice than the devices used up to the present time for the same purpose.

According to an essential feature of the present invention, means are provided for absorbing the shocks through the combination of two distinct actions chosen in such manner that their resultant varies according to a predetermined law during the time corresponding to the absorption of the shock produced, for instance, by the opening of the parachute.

According to another feature of the invention, at least one of the actions above mentioned is produced by the breaking, under the effect of the shock, of threads, seams, or the like, interconnecting two portions or elements which are to be torn apart under the effect of the shock produced by the opening of the parachute, and this action can be made variable in the course of the absorption of the shock.

Still another feature of the present invention relates to the case of parachutes having a shock absorbing device interposed between the parachute proper and the harness or the like, and at least one safety strap interconnecting these two parts. According to this feature of the invention, this safety strap is arranged to play a part in the shock absorbing action of the above mentioned device.

According to still another feature of the invention, one of the two distinct shock absorbing actions above mentioned is ensured by a system acting by friction and combined by a system acting by tearing of threads or the like, these two systems producing absorbing effects which vary in such manner that their combination produces the desired law of variation of the total shock absorbing effect.

When the parachute includes a safety strap as above mentioned, an interesting feature of the invention consists in folding the strap and sewing together the two portions thus folded on each other, whereby, under the effect of the shock, these two portions are torn away from each other so that the strap is given a straight shape, the breaking of the seams producing the desired shock absorbing action.

Other features of the present invention will result from the following detailed description of some specific embodiments thereof.

Preferred embodiments of the present invention will be hereinafter described, with reference to the accompanying drawings, given merely by way of example, and in which:

Fig. 1 is a perspective view of a parachute fixation device made according to the present invention; this device being of the belt type, the system being shown with the bag open and the parachute in the course of opening, such a system being provided with a shock absorbing device made according to a first embodiment of the invention;

Fig. 2 is a similar view of a second embodiment of such a system, the parachute fixation means being of the harness type;

Fig. 3 is a separate perspective view on an enlarged scale showing the safety strap above referred to.

In the following description, it will be supposed that the invention is applied to the case of a parachute provided with a fixation system of a suitable kind (either of the belt type, as illustrated by Fig. 1, or of the harness type, as illustrated by Fig. 2) and that it is desired to provide such a parachute with means for absorbing the shock undergone by the parachutist when the parachute opens.

Devices have been imagined for this purpose, which are all based upon the use of means for yieldingly resisting the action which produces the shock so as to distribute over a relatively substantial period of time an action which otherwise would be practically instantaneous.

I have found that the law according to which the shock absorbing effort exerted by the means above mentioned is to vary during the time corresponding to the absorption of the shock if the desired result is to be obtained, is not complied with by the existing devices.

In particular, advantageously, the shock absorbing effort should keep substantially constant, or should even increase in a gradual manner after the opening of the chute.

Now, in the known devices in which the shock absorbing action is obtained by the action of the friction developed between parts in relative movement with respect to one another as a consequence of the opening of the parachute, the shock absorbing effort decreases, on the contrary, during the action, as a consequence of the

rise of temperature and of the resulting expansion of the cooperating parts between which friction is to take place.

According to the present invention, this drawback is obviated by having recourse to shock absorbing means such that the shock absorbing effort can be determined in an accurate manner, during the action, according to a predetermined law. For instance, preferably, this effort remains practically uniform or increases gradually during the absorption of the shock.

There are various embodiments of such means, and, in particular, it would be possible to have recourse to devices such as hereinafter described acting by successive tearings of threads or the like, of such respective resistances as to produce the desired law of variation of the shock absorbing effort.

However, according to a preferred embodiment of the invention, the means in question are devised in such manner that the shock absorption results from the combination of at least two distinct actions which are suitably chosen so that their resultant produces the desired law of variation.

Such an arrangement is particularly interesting because it permits of utilizing, for exerting one of said actions (as it will be hereinafter assumed) a shock absorbing device of the known friction type, the defects of which are compensated, according to the invention, by the operation of the second shock absorbing device.

As for this second shock absorbing device, it is brought into play either concurrently with the first elementary shock absorbing device and for the whole time of the action thereof, or only during a portion of the time, for instance after the first action has already started.

This second elementary shock absorbing device may be of any suitable type.

For instance, it may be of the friction type corresponding to the first of the shock absorbing actions, but arranged in such manner as to work in a different way.

Or, as it will be hereinafter described, the shock absorbing device producing the second action is of a type working by the tearing or breaking of threads or seams the respective resistances of which are calculated in a predetermined manner.

The indication of these particular arrangements has no limitative character.

As above stated, according to a feature of the invention, in a device including shock absorbing means acting by tearing of threads or seams, for use in the case of a parachute, such a device is advantageously combined with the safety strap which serves to connect the parachute proper with the harness or the like, when such a safety strap is provided.

This arrangement is, for instance, illustrated by Fig. 3, in which said safety strap is folded at least once upon itself, the two branches of the fold being temporarily assembled to each other by seams such as 2, 3. The whole is connected to the cables 8 of the parachute proper and to the harness (or belt) of the parachute in such manner that a shock tends to open or unfold the safety strap by breaking the threads which form the seams in question.

It will be readily understood that, according to the arrangement that has been used for these seams, the shock absorbing action produced by their breaking or tearing off will vary accordingly. In the drawing, I have shown on the one hand, on the edges, stitches 2 provided at regular (or irregular) intervals, and, on the other hand, on the flat part of the strap, seams 3, the number of which increases when the strap is being unfolded. Therefore, the shock absorbing action increases gradually and compensates for the decrease of the shock absorbing action produced by the friction shock absorbing device during the same time.

Stitches 2 may be either sewn by means of the same thread on the two folds of the strap, or made distinct on said two folds and connected together by knots or the like 13, which start the breaking, these indications having no limitative character.

Concerning the friction shock absorbing device it can be made in many different ways. In the embodiment illustrated by the drawing, it consists of a cable having two branches 4 adapted to slide with a certain friction, under the effect of a shock, in at least one gripping element 5.

In the embodiment of Fig. 1, the invention is supposed to be applied to a fixation system of the belt type. One of the ends of the safety strap 1 is fixed to said belt 6. The gripping element 5 is itself carried by the belt or, as shown by the drawing, by the safety strap. The other end of said strap is fixed to an element 7, itself secured to cables 8. Cable 5 is also fixed to said element 7.

In Fig. 2, the invention is shown applied to a fixation system of the harness type. In this example, the gripping element 5 is carried by an element 9 secured to two straps 10 of the harness. One of the ends of the safety strap 1 is secured to the other end of element 9.

It should be noted that, according to an advantageous arrangement illustrated by Fig. 3, the two branches of cable 4 may be folded on the inside of small sockets 11 provided on straps 10 or any other part of the harness.

Of course, the bag 12 which is to contain the parachute when the latter is folded may be of any suitable type.

Whatever be the particular embodiment that is chosen, the parachute according to the invention will work in the following manner:

When the parachute is opened, the shock that is transmitted to the belt or the harness produces, on the one hand, the slipping of cable 4 in its gripping element and, on the other hand, gradual breakings or tearings of the various stitches and seams 2, 3. As a consequence of the heating, gripping element 5 expands and cable 4, being no longer so tightly held therein, is not braked to the same degree. But this reduction of the shock absorbing effort is compensated by the resistance of the stitches and seams. Therefore, it is possible to obtain a resultant which varies according to any desired law, which is a considerable advantage over prior devices used for the same purpose.

RENÉ TAUTY.

PUBLISHED

MAY 25, 1943.

BY A. P. C.

R. TAUTY
DEVICES FOR ABSORBING SHOCKS
ESPECIALLY FOR PARACHUTE
Filed March 28, 1940

Serial No.
326,529

2 Sheets-Sheet 1

Fig. 1

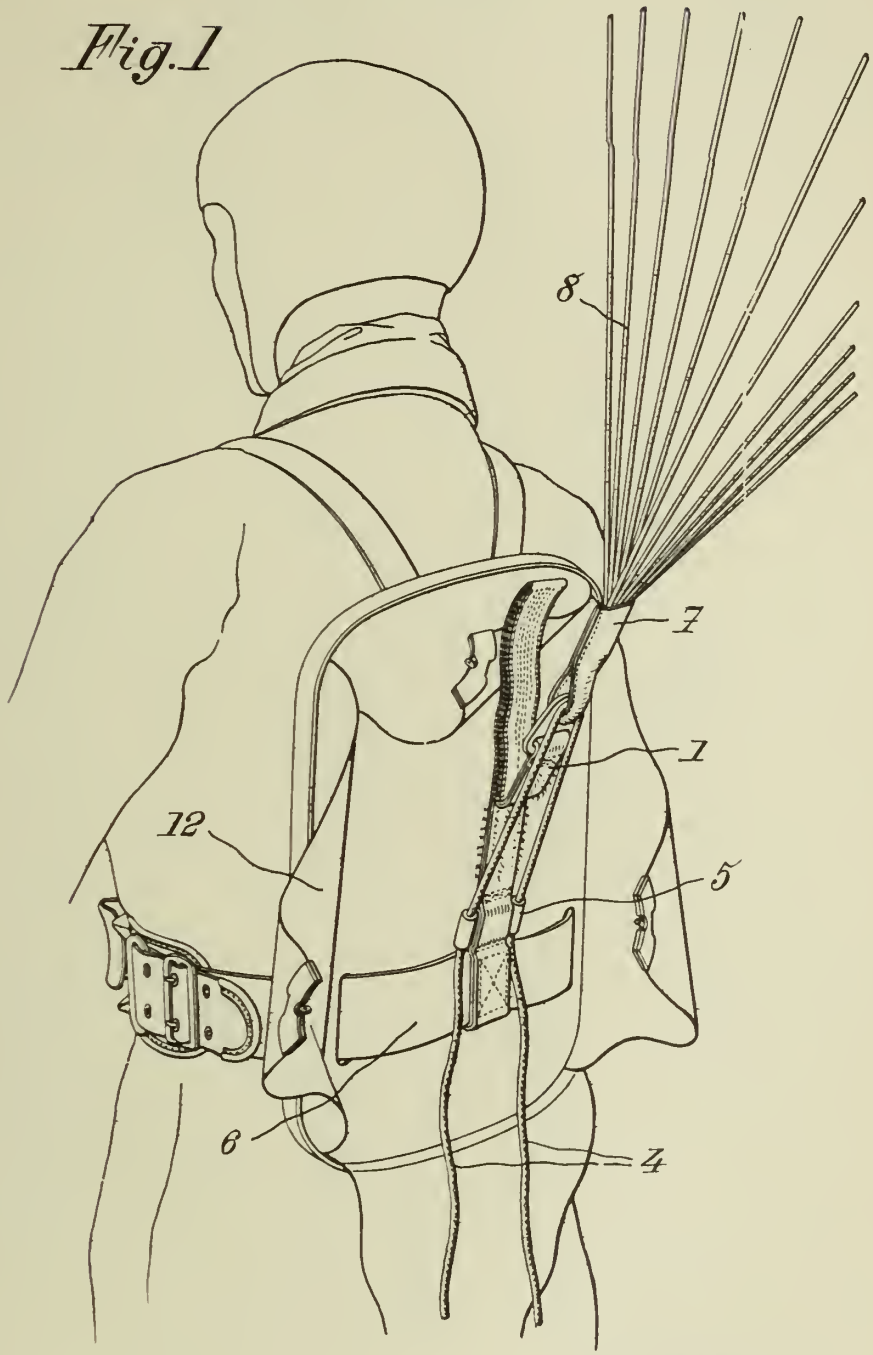

René Tauty
by Bailey & Larson
attorneys

PUBLISHED

MAY 25, 1943.

BY A. P. C.

R. TAUTY

DEVICES FOR ABSORBING SHOCKS ESPECIALLY FOR PARACHUTE

Filed March 28, 1940

Serial No. 326,529

2 Sheets-Sheet 2

Fig. 3

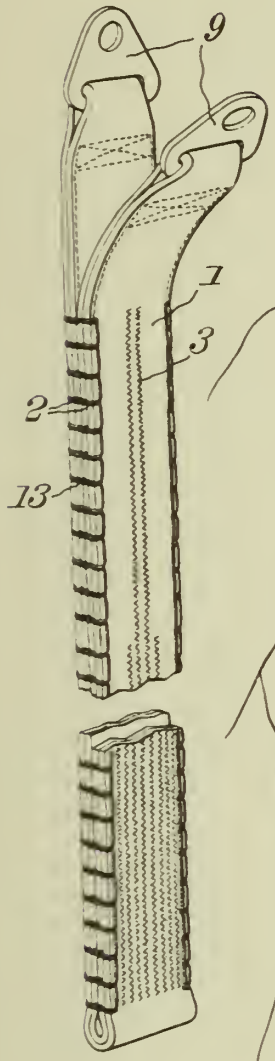

Fig. 2

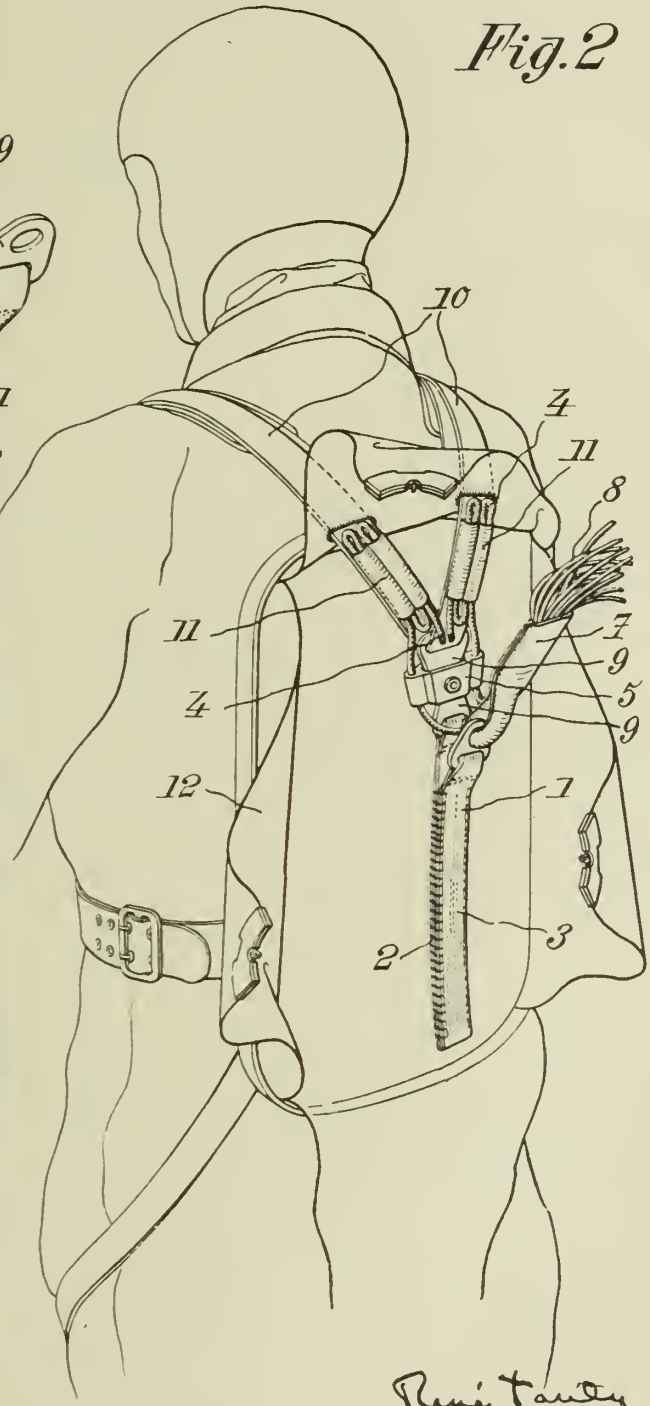

Rene Tauty

by Bailey & Parson attorneys

Published May 25, 1943

Serial No. 326,641

ALIEN PROPERTY CUSTODIAN

CROSS WINDING FRAME

Wilhelm Esser, Munchen-Gladbach, Gustav Kahlisch, Rheydt, and Walter Reiners, Munchen-Gladbach, Germany; vested in the Alien Property Custodian

Application filed March 29, 1940

In order to do away, as much as possible, with manual labour on winding frames, it has already been proposed to arrange in the individual winding points magazines for feeding bobbins and thread knotting devices so that, when the thread supply ceases, the accumulating bobbin is lifted off its driving pulley and braked, so that the not yet wound-on end of the yarn could be knotted together with the beginning of the yarn from a substitute feeding bobbin which in the meantime had been brought into the feeding point. A supposition for all these known devices is therefore, that the broken end of the winding bobbin is still sufficiently long and remains within the range of the knotting device. As further the magazine consists of a plate rotating horizontally in front of the feeding bobbin and carrying at the same time in a bell some of the necessary building elements whereas another part of these building elements together with the knotting arrangement must be arranged at the side of the bell in front of the winding bobbin, in order to render secure as far as possible the intended knotting proceeding, the distance of spindles of the frame must be greater than usual. The winding points are further not easily accessible and to survey.

According to the invention, when the known perpendicularly circulating rotary star for the automatic ejecting of an unwound tube and swinging in of a substitute bobbin into the thread feeding point is provided, a central control device is arranged above the rotary star but below the collecting bobbin, which central control device, influenced by the broken end feeler arranged in front of it, in turn influences the feeding movements on the feeding and winding points of the yarn and those of a thread picking up device, and also those of the knotting device. By this arrangement it is attained that, at normal spacing of the spindles on the spindle frame, the distribution is clearly arranged and easily accessible. It has already become known, in winding frames with perpendicularly circulating rotary star, to employ a so-called travelling knotting device. In such arrangements the replacement of the feeding bobbins is effected, however, from a conveying band movable towards the rotary stars, so that the knotting device can operate only, after the movements of the conveying band in the direction to the frame and in the direction to the spindle of the rotary stars actually have been terminated. The knotting in the individual winding point when the yarn has broken requires further a somewhat wider shape of the spinning frame in the practical construction, in order that the winding proceedings in the other winding points are not disturbed.

In the known winding frames the knotting device operates whenever the yarn feeding is intercepted, may it take place owing to the fact that the thread breaks or that the bobbin is empty. Compared herewith the mechanism for the bobbin change operates according to the invention independently on the control proceedings disengaged by the thread feeler only when the feeding bobbin is exhausted, in that for instance two feeler levers bear against the end of the feeding bobbin and initiate the bobbin changing when the bobbin is exhausted before the thread picking-up and knotting device begins to operate, so that the picking-up device finds a substitute bobbin in the winding position.

In order to pick-up on the winding bobbin the end of the broken yarn, this bobbin is automatically turned back in the known picking-up arrangements, in order that the picker-up can grip the end of the yarn. This is simplified, according to the invention, in that the friction disc, by means of which the picking-up arrangement turns back the collecting bobbin for uncovering the end of the wound-on and broken yarn after the feeding bobbin has been lifted off and stopped, is locally eccentrically flattened on its surface so that, when being detached from its driving mechanism, it is no longer driven from the thread guiding drum.

According to the invention the suction arm of the pick-up device, which is pushed over the not exhausted feeding bobbin when a yarn breaks, is constructed preferably so that a separate parallel guiding is provided for it which guiding is formed of telescopable elements.

The invention is illustrated in the accompanying drawing diagrammatically by way of example.

Fig. 1 shows in front elevation four winding points of a winding frame,

Figs. 2 and 3 show the same winding points in top plan view, the feeding spindles being pushed forward towards the lower edge of the sheet for the sake of better comprehension,

Figs. 4 and 5 are sections on lines IV—IV and V—V of Figs. 2 and 3 respectively,

Figs. 6 and 7 show in front and side elevation respectively the control mechanism for exchanging the feeding bobbins,

Figs. 8 and 9 show in front and side elevation respectively a detail of the control mechanism of the knotting device.

The four winding points serving for illustrating

the invention may be limited for instance by the frame walls 1*a* to 1*d*, in which the shafts 2, 3, 4, 5, 6 and 7 are journaled, which are common for the winding points, the other individual elements being accordingly supported. The shafts 2 to 7 may be subdivided all or some of them in spindle groups, or an individual motor drive may be provided for each shaft according to the subdivision of the winding frame, which depends, for instance, on the magazine arrangement and the winding of the feeding bobbin heads. This is shown in Fig. 1 by the mutual position of the feeding bobbin magazines 24*a* and 24*b* or 24*c* and 24*d* respectively, for simplicity sake however so that the control means for the winding points adjacent the frame walls 1*c* and 1*d* are placed between these frame walls, whereas in the practical form of construction, the magazines 24*c* and 24*d* being evidently closer together and the partitions 1*c* and 1*d* being omitted, the control means are behind the place where the partitions would have been. Such an arrangement reduces the number of frame walls and offers for instance the possibility that only one suction arm is sufficient for catching the fed threads of adjacent winding points.

The chief elements of the machine constructed and controlled according to the invention (head of feeding bobbin, head of winding bobbin, yarn knotting arrangement and main control gear influenced by the yarn feeler) are arranged for instance as follows:

Every head of feeding bobbin is equipped, as shown in Fig. 4, with the usual star-shaped bobbin carrier 21, the four arms 22 of which are turned by 90° on the shaft 3 between tube strippers 23 (Fig. 3) after a fresh bobbin K has been pushed out of the magazine 24 and a tube H has been unwound. The tubes H pushed off the arm 22 by the curved edges of the strippers 23 are conveyed by a conveying band 25 (Fig. 5) in the usual manner to a collecting box. The controlling of the change of bobbin is effected by a bush 27 keyed on a shaft 26, one flange of this bush 27 engaging by means of teeth and under spring pressure in the flange 28 of a sprocket wheel 29, so that this sprocket wheel, or a chain 30, is moved only in one direction when the bush 27 revolves. The bush 27 or the shaft 26 is rotated from shaft 2 as soon as a front nose 33 of a lever 31 under the action of a rod 32 is pulled out of a notch 35 cut into a coupling bolt 34, as shown in Fig. 7, said bolt engaging in an indentation of a toothed wheel 36 which meshes with a toothed wheel 37 resiliently connected with shaft 2. The rod 32 is attracted by a switching relay 38 (Fig. 4), as soon as two contact arms 39, 40, bearing against the foot of bobbin K which is in the feeding position, close a circuit owing to the idle running of the tube H. A pin 41 of an eccentric 42, said pin acting upon the actually lowermost arm 22 of star 21, and a crank 43, which moves the carriage of the magazine 24 through the intermediary of a rod 44, turn with the revolving of shaft 26. By the turning of star 21 the bobbin, actually lowermost in the magazine 24, is swung out and thus makes room for the next following substitute bobbin, which consequently, when the magazine carriage moves back, is pushed onto the arm of the star, which arm was the lowermost arm of the star but extends now in horizontal direction and faces this bobbin.

The formation of the cross wound bobbin in the head for the winding bobbins is effected according to the example illustrated by means of so-called diagonal doffing, in that the yarn F winding on the cross wound bobbin S is shifted from the lateral feeding point, determined by the yarn guide 60, through the groove of the yarn guide drum 61 to the other side of the drum and thence, sliding over the drum wall, returns into the initial position. The yarn guiding drums 61 are driven from the shaft 7 and can be detached from the driving gear through the intermediary of a rod 71 and of a lever arm 72 by pushing as under the elements of clutch 73. When the rod 71 is pulled, as will be hereinafter explained, a brake 74 is at the same time actuated for a moment, and a driving disc 75 driven in backward rotation through the intermediary of toothed wheels 76, 77 (Figs. 4 and 2) from a chain 78. Owing to the construction of the elastic cover of the driving disc 75 shown in Fig. 1, this disc rotates also the yarn guiding drum, so that, when the yarn breaks, the yarn end thus produced winds back from the bobbin S and can be caught by the catching arm of a knotting device.

The knotting device 91 driven by means of a chain 90 is, according to Fig. 5, equipped with the usual air conduits 92, 93 and 94, at the ends of which the yarn-catching arms 97, 98, controlled by rods 95, 96 by means of eccentrics keyed on shaft 5, are hingedly mounted airtightly. The yarn-catching arm 97 has a suction cone 99, and the yarn-catching arm 98 has a slit-shaped suction mouthpiece 100. The end of the yarn F sucked on by the suction cone 99 is swung, in known manner, by means of a finger 101, hingedly mounted on the foot of the suction cone, into the knotting range of the knotting device 91, as soon as a control nose on the lower end of finger 101 slides over a control pin 104. In order that the suction cone 99 can engage over the conical end of the winding cone of the feeding bobbin K also when tube H has been almost unwound, the narrow end of the suction cone has a packing sliding over the tube, and the arm 97 is equipped with a guide sleeve 102, which, when the arm 97 descends, slides over a guide pin 103. For controlling from the yarn feeler 121 the control proceedings in every winding point, this yarn feeler 121 has a control arm 122, the end 123 of which is bent off at an angle, and, when the yarn feeler 121 oscillates, this bent end engages in a recess 124 of a double lever 125, 126. A control cam 132 continually rotates about a shaft 131 and, when this control cam strikes against the bent off end 123 of arm 122, said double lever 125, 126 is oscillated, so that rod 71 releases the drive 73 of the yarn guide drum 61 and the brake 74 becomes operative. At the same time a double lever 133, 134 is actuated, as shown in Figs. 8 and 9. By the oscillating movement of the double lever 133, 134, the wedge-shaped end 135 of the lever arm 134 comes out of engagement with a coupling bolt 136, so that flange 138 of a bush carrying the sprocket wheels 30*a*, 90*a* and 78*a* is coupled with a disc 139 and thereby rotated from shaft 6. After completion of one revolution a control nose 141 engages under one end of a double lever 142, 143, the other end of said lever depressing a locking 144, in which the bent off end 123 of the yarn feeler has been caught, as soon as this end has been liberated from cam 132 owing to the continued rotation of this cam.

If the cross wound bobbin S has attained the desired diameter, also the yarn guide drum is detached from the driving mechanism, in that rod

71 is acted upon by a relay 153 through the intermediary of a rod 151 hingedly connected on the same lever. By a corresponding coupling 152 of lever 125, the remaining control gear does not participate in this movement. Current is fed to the control relay 153 as soon as the arm carrying the cross wound bobbin S engages under two springs 154, 155 which are connected with contacts mounted on an arm 157 adjustable on shaft 4 by means of a set screw 156.

The operation of the machine is therefore such that, after every winding point has been started, the feeding bobbins are successively wound off automatically to a diameter predetermined for a cross wound bobbin, and that, when a yarn breaks, the yarn feeler disengages the control gear so that, through the intermediary of the chains 78 and 90, the head of winding bobbins and the coordinated knotting arm cooperate. In order that also during the bobbin changing the knotting device can operate in direct continuation of the swinging-in of the substitute bobbin, the bush 27 rotates, as shown in Fig. 6, the spur wheel 29, whereby, through the intermediary of chain 30, not only the toothed wheel 30*a* but also the toothed wheels 78*a* and 90*a* are rotated, whereas the toothed wheel 29 comes out of mesh with the bush 27 owing to the construction of the toothed portion, in case the rotary movement is effected from the control gear.

WILHELM ESSER.
GUSTAV KAHLISCH.
WALTER REINERS.

PUBLISHED

MAY 25, 1943.

BY A. P. C.

W. ESSER ET AL

CROSS WINDING FRAME

Filed March 29, 1940

Serial No.

326,641

4 Sheets-Sheet 1

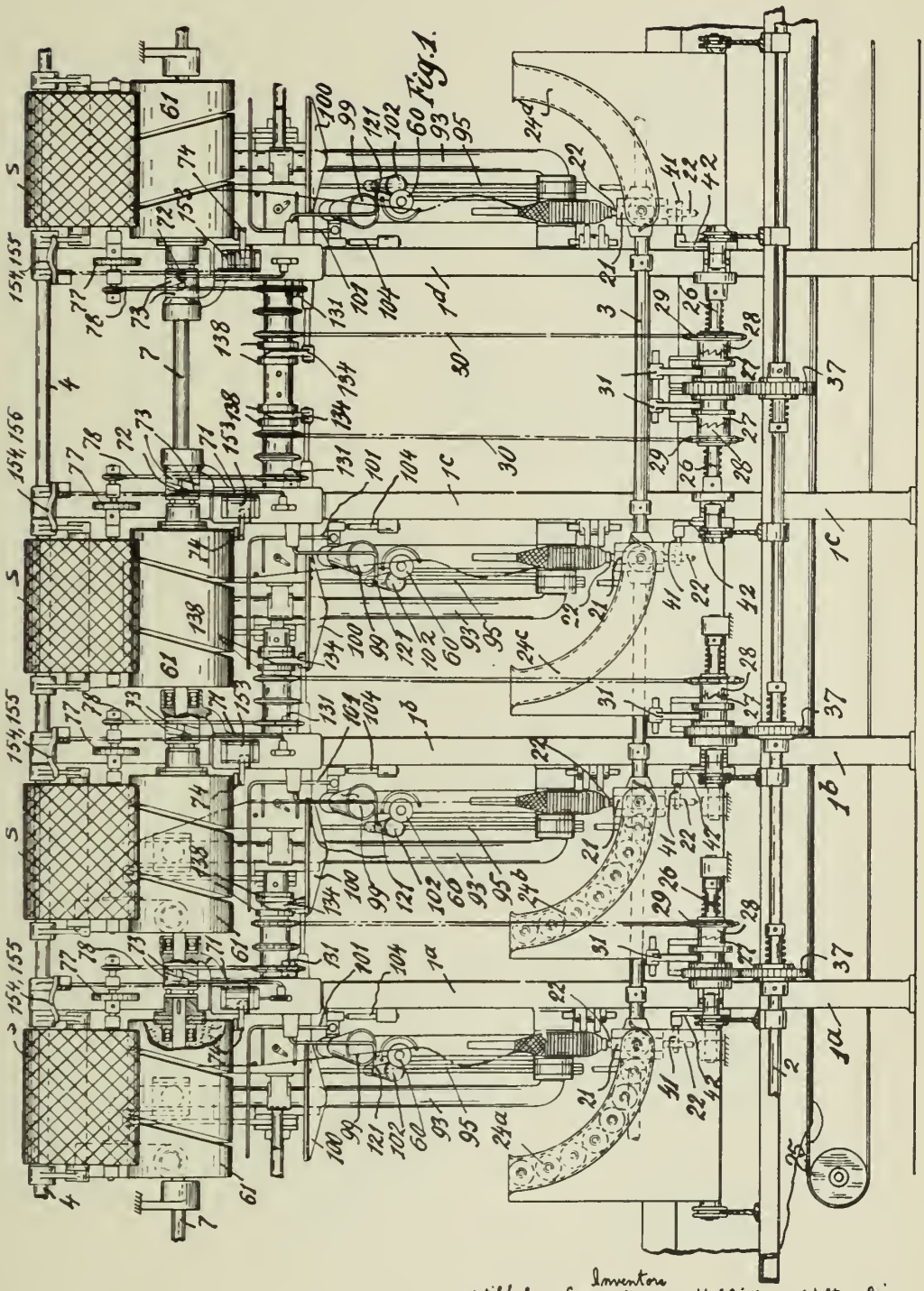

Inventors
Wilhelm Esser, Gustav Kahlisch, + Walter Reiners
by Knight Bros attorneys

PUBLISHED

MAY 25, 1943.

BY A. P. C.

W. ESSER ET AL

CROSS WINDING FRAME

Filed March 29, 1940

Serial No.

326,641

4 Sheets-Sheet 2

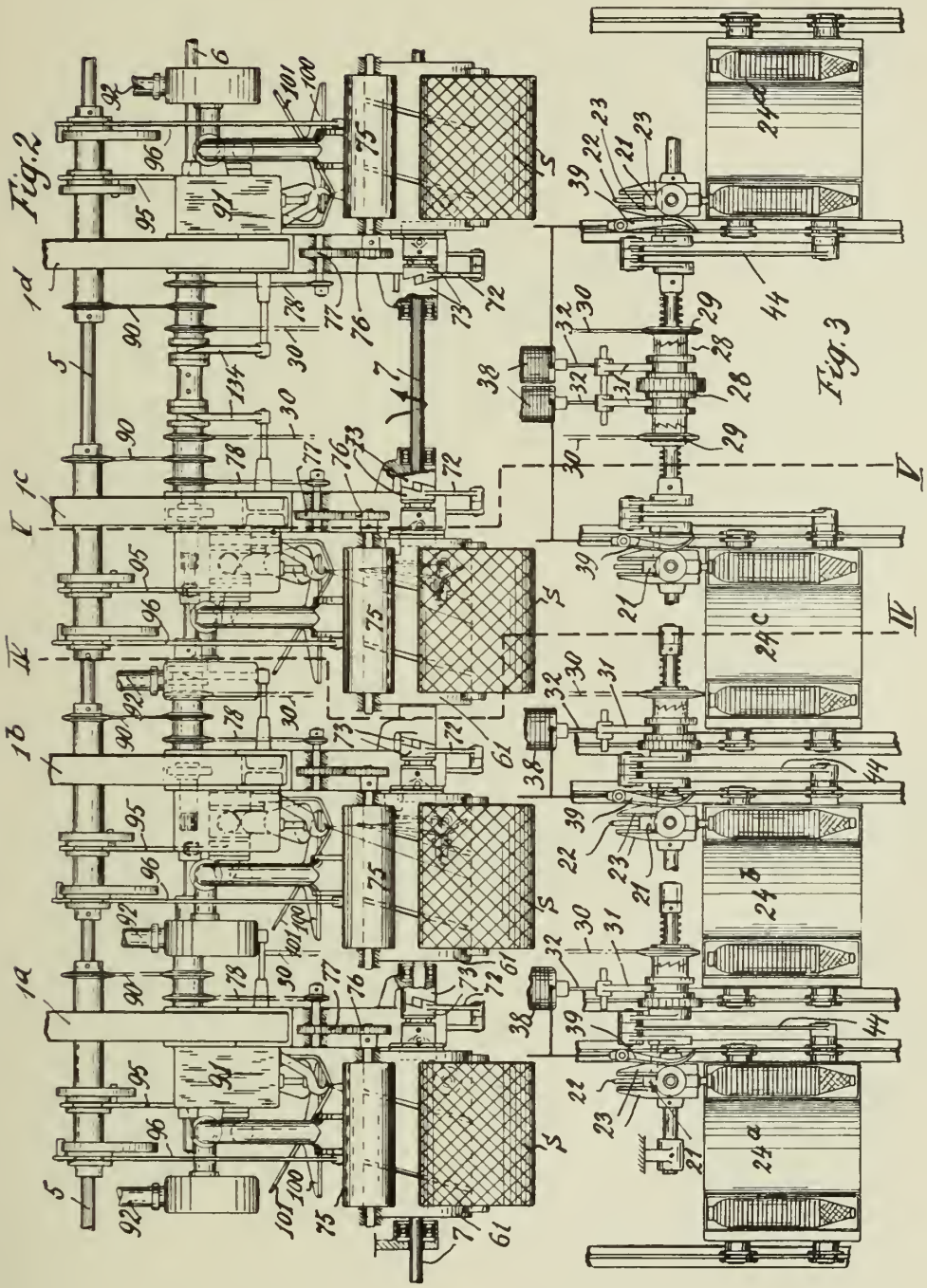

Inventors
Wilhelm Esser, Gustav Kahlisch, + Walter Reimers
by Knight Bros Attorneys

PUBLISHED

MAY 25, 1943.

BY A. P. C.

W. ESSER ET AL

CROSS WINDING FRAME

Filed March 29, 1940

Serial No.

326,641

4 Sheets-Sheet 3

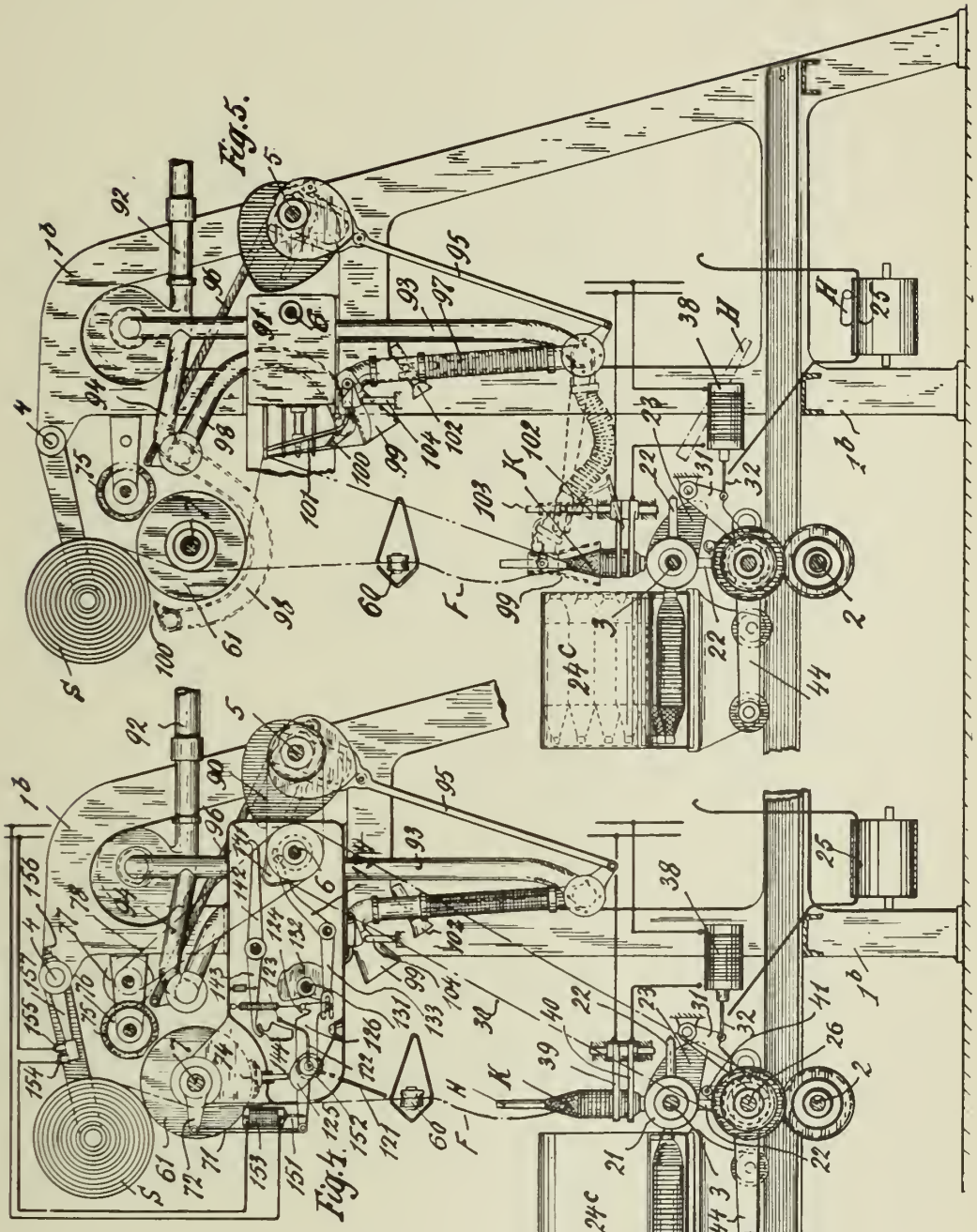

Inventors
William Esser, Gustav Kehlisch, + Walter Reiners
by Knight Bros attorneys

PUBLISHED
MAY 25, 1943.
BY A. P. C.

W. ESSER ET AL
CROSS WINDING FRAME
Filed March 29, 1940

Serial No.
326,641
4 Sheets-Sheet 4

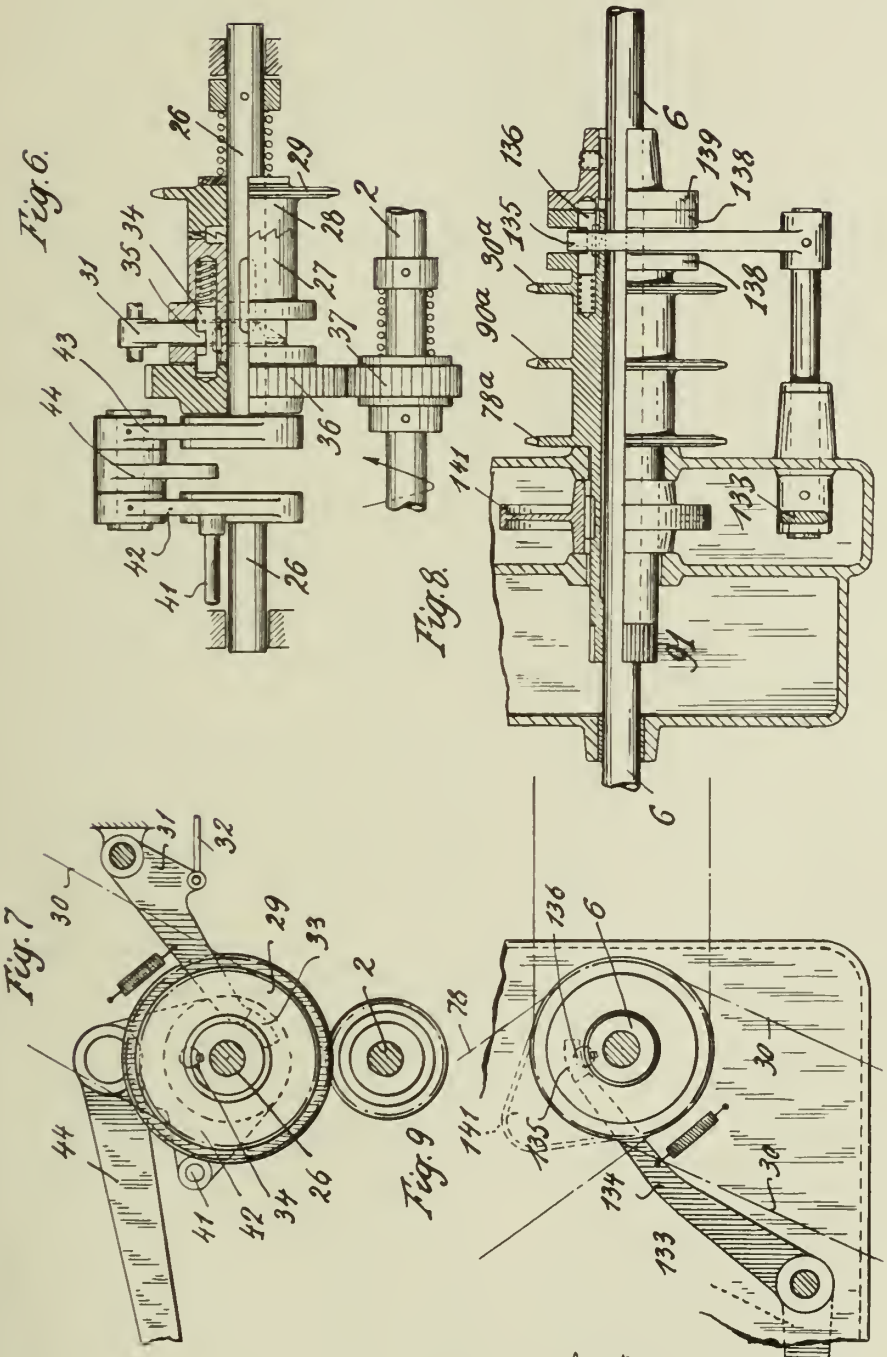

Inventors
William Esser, Bretar Kahlisch, & Walter Reiners
by Knight Bros attorneys

Published May 25, 1943

Serial No. 326,648

ALIEN PROPERTY CUSTODIAN

AUTOMATIC STEERING DEVICES

Waldemar Möller, Berlin-Zehlendorf, and Adam Kronenberger, Berlin - Halensee, Germany; vested in the Alien Property Custodian

Application filed March 29, 1940

The invention refers, in general, to automatic steering arrangements by which is also meant, in general, the so-called "regulator" arrangements. This is intended especially for application to automatic control of aircraft.

With automatic steering arrangements for airplanes, angular speed and in some cases also angular acceleration as well as eventual further control values aside from the control necessitated by the plane's flying position, are impressed on the power switch. To attain a perfect steering control action, the various control impulses must be tuned to each other's magnitude.

To facilitate the correct, reciprocal measurement of the impulses, it has already been suggested to include a spring between the control transmitter and the power switch for the servo unit. Through the choice of springs of various stiffness, the influence of the individual control transmitter on the power switch can be changed in a simple manner.

The present invention distinguishes itself from the aforementioned arrangements in that the resilient, springy connection between the control transmitter and the power switch is so maintained under initial tension that the spring yields only after the passing of the highest control values and limits same, in case of further deflection of the measuring system, to a constant value.

In this manner, a limitation of the control value of a desired magnitude is possible without changing the sensitivity of the control transmitter. On the other hand, a strict linear dependence between the signal departure and the control value is gained in that only the middle part of the line indicating the steering direction is used since the generally strongly flattened divergence of parameters is cut off.

The control values can further be made use of for navigation by means of distant indication. Up to the present time this was, in general, not possible as, for example, with automatic steering a deviation of a few degrees from the set course the final value of the steering impulse should be reached while, for the purpose of indication, such a sensitivity would be much too great and the greatest indicator deviation is only desired with a deflection of from 10 to 30 degrees from the course to be flown.

Further details of the invention are introduced in the following description of some methods of adaptation.

Fig. 1 shows schematically an automatic steering arrangement, omitting all parts not necessary for the comprehension of the invention.

Figs. 2 and 3 show two further forms of the spring or yielding connection under initial tension.

Fig. 4 is a diagram illustrating the principle involved.

In Fig. 1, 10 indicates an eccentric control disc fastened to axis 11 which axis is controlled, for example, by a magnet needle 12, a directional gyro or any other position maintaining or measuring device adapted for impulse generation. The compressed air, flowing in direction of arrow 13, hits the two orifices 14 and 15 unequally according to the position of the control disc 10, whereby a differential pressure is created in lines 16, 17. Said lines lead to the two sides of housing 18 which encloses the control diaphragm 19, and to the housing of the pneumatically operated course indicator 19', the motion of which is caused by a pressure sensitive measuring system, not shown but in parallel to diaphragm 19.

The movements of diaphragm 19 are transmitted by pin 20 and lever 22, moving around fulcrum 21, through linkage 23 and 24 to jet pipe power switch 25, movable around axis 26 which is vertical to the plane of the paper. Compressed air or fluid under pressure is fed into the jet pipe in the direction of the arrow 27, whereby a differential pressure acting on the piston 30 of the servo 31 is created by the position of the jet pipe in front of the two dividing openings 28, 29, resulting in the relative displacement of the rudder 32. By means of two centralizing springs 33, 34 the jet pipe is normally kept in its central position. Its movement is limited by stops 35, 36.

The right end of lever 22 is fork-shaped. On each of the two lever ends 37, 38 is a piece 39, 40 conical in shape on the outside and cylindrical on the inside. Both parts are movable on bolt 41 which is attached to pin 20. Helical spring 50 presses with a certain tension the two pieces 39 and 40 against lever ends 37, 38 and against the screws 42, 43, respectively, which rest on the end of bolt 41. Screws 42, 43 are so set that the transmission of movement from pin 20 to lever 22 takes place without any lost motion.

As long as the power transmitted from diaphragm 19 to pin 20 and to lever 22 is less than the spring tension, the diaphragm motion is exactly and rigidly transmitted to the jet pipe. However, if the power necessary to displace the

jet pipe attains higher values, for example if the centralizing power of springs **33**, **34** overpowers the tension of spring **50** or the jet pipe hits against the stops, the spring will then yield and, according to the direction of motion of pin **20**, conical piece **39** or **40** is taken along by nut **42** or by nut **43**, respectively, and lifted from its respective seat. Diaphragm **19** can therefore continue to move without moving lever **22**. The spring is so designed that its change of length has no material effect on its initial tension. The transmitted turning moment after the lifting off of one of the conical pieces **39**, **40** remains practically constant.

The arrangement makes it also possible for the jet pipe to carry out any possible movements inside its stops **35**, **36**, regardless of the position of diaphragm **19**. These movements are derived from the other measuring device (not shown) such as, for example, a gyro with two degrees of freedom measuring the turning speed of an airplane. For example, when starting a turn by displacing stationary parts **14**, **15** of the control transmitter of an automatic steering arrangement, the springy, resilient connection transmits only a fraction of the differential pressure of diaphragm **19** to lever **22** and thus to jet pipe **25**. The precessing rate of turn gyro, due to the turning of the plane, exerts an opposing moment on the jet pipe and, through the balancing of both impulses, the jet pipe takes a position such that the rudder receives the necessary deflection for the desired rate of turn.

The turning moment transmitted by diaphragm **19** to jet pipe **25** is limited by the initial tension of spring **50**. However, the higher control values are indicated by the course indicator **19'** whose sensitivity is atuned to the impulse transmitter **10**—**15**.

Fig. 2 shows a very similar method of resilient connection held under initial tension. Instead of the bolt **41** piercing the conical pieces **39**, **40**, there is a fork-like part **41'** whose ends **42'** and **43'** rest against the parts **39** and **40** in a manner similar to that of screws **42** and **43** in Fig. 1.

In the arrangement of Fig. 3, the pin **20** carries a fork **41''** between whose ends rests pin **44** perpendicular to the plane of the paper. On lever **22'**, at **45**, two levers **46** and **47** are arranged to swing, though normally they lie close to lever **22'** under the tension of spring **50**. The levers **22'**, **46** and **47** move together until spring **50** yields, after passing its initial tension, whereby only one of the two levers **46**, **47** on lever **22'** remains closed while the other one moves away.

It was shown above that the lengthening of spring **50**, due to its yielding, should not result in a marked increase of spring tension. For most cases this demand can be met through the choice of a spring which, unsprung, is definitely longer in Figs. 1 and 2, or shorter in Fig. 3, than under initial tension in operating position. However, if the greatest possible impulse exceeds the control value limit by considerable, and if a very accurate maintenance of the transmitted turning moment is desired, limit stops **48**, **49**, limiting the stroke of the diaphragm, may be supplied and so set that the motion of lever **22'** suffices to move the connected power switch to its two terminal positions.

In Fig. 4, the line indicating the steering direction of the impulse transmitter **10** to **15** is shown to indicate the effect so gained. The differential pressure acts on diaphragm **19** due to its dependence on the course deviation. At points P_1 and P_1', respectively, spring **50** begins to yield so that the force transferred to fork **22'** takes the course indicated by the dash lines. The still remaining, slowly growing control value transferred to the power switch originates from the increased tension of spring **50** due to the great diaphragm stroke. If, now, limit stops **48**, **49** are added, the curve breaks a second time at points P_2 and P_2' and from there on takes a horizontal course, as shown by the dotted line. As shown by the projection of points P_1 (P_1') and P_2 (P_2') on the abscissa and ordinates, the increase of the transferred moments after the first break of the line indicating the steering direction at points P_1 and P_1' is very small, but is greatly exaggerated in the pictorial representation. In practice points P_1 and P_2 would be permitted to merge, which is permissible because the diaphragm stroke reaching to point P_1, the jet pipe must have reached its position against the stop if no reaction has acted on the centralizing springs **33**, **34**; otherwise the deflection would be insufficient.

In place of the pneumatic impulse transmitter system **10**—**15**, any other desirable measuring system may be used, and jet pipe **25** may also be replaced with another power controller or relay.

WALDEMAR MÖLLER.
ADAM KRONENBERGER.

PUBLISHED

MAY 25, 1943.

BY A. P. C.

W. MÖLLER ET AL

AUTOMATIC STEERING DEVICES

Filed March 29, 1940

Serial No.
326,648

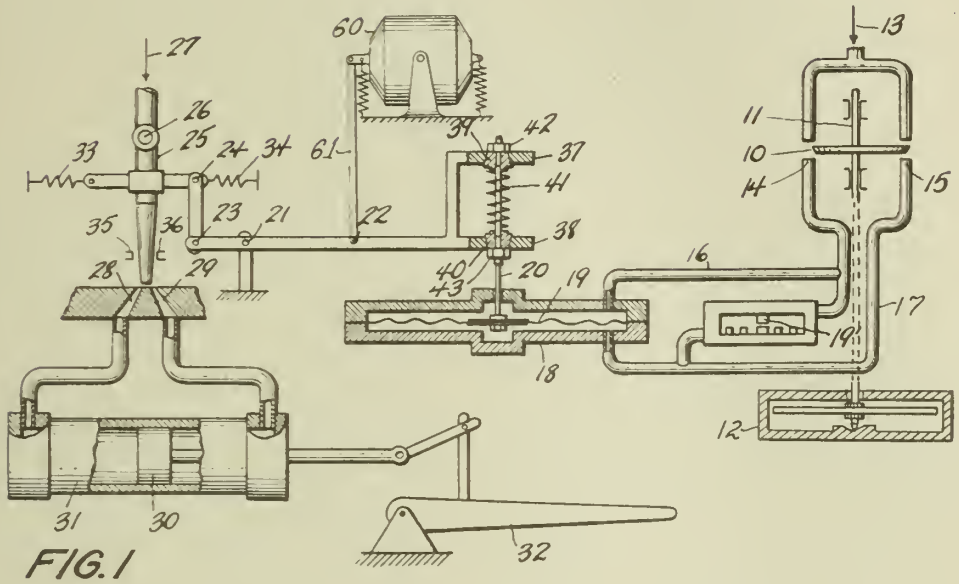

FIG. 1

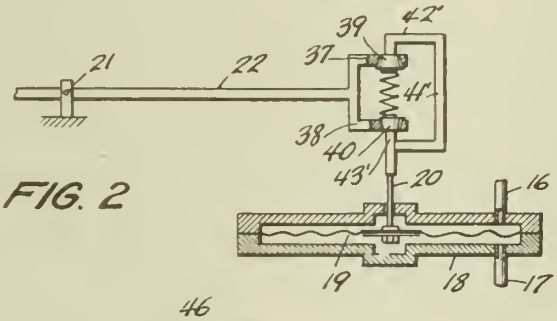

FIG. 2

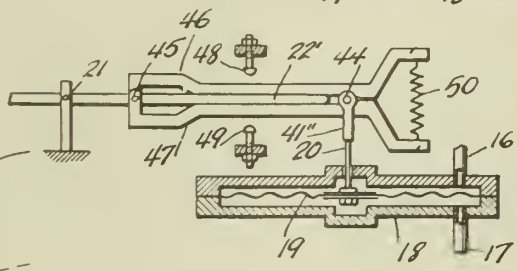

FIG. 3

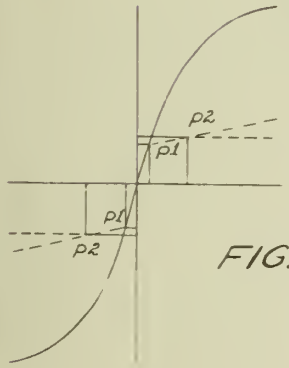

FIG. 4

INVENTORS
WALDEMAR MOLLER
ADAM KRONENBERGER
BY
Herbert H. Thompson
their ATTORNEY.

Published May 25, 1943

Serial No. 327,344

ALIEN PROPERTY CUSTODIAN

AQUEOUS EMULSIONS AND PROCESS FOR THEIR PRODUCTION

Adalbert Müller, Augsburg, Germany; vested in the Alien Property Custodian

No Drawing. Application filed April 1, 1940

It is known to produce aqueous emulsions containing the salts of polyvalent metals, in particular of aluminum, by the emulsification of paraffin, waxes, fats, oils, resins and other similar substances with the aid of organic protective colloids, such as glue, gelatine, starch, vegetable mucilage. By this method the metal salts are introduced either subsequently into the emulsion, or paraffin etc. is directly emulsified with aqueous solutions of the aluminum salts and the protective colloids. The object of the latter is to stabilize the dispersed phase obtained by mechanical means, for instance, in a colloidal mill.

It has now been found that also without the use of protective colloids emulsions may be formed, containing, apart from water, only the dispersed substance and aluminum salts, if these two substances are tuned to each other in a certain manner. Thus a solution of basic organic or anorganic aluminum salts is acting in a dispersive manner on fatty and waxy substances of a low acid value.

If, for instance, melted hard wax with an acid value of 19 is stirred into a basic aluminum formate solution, with a content of 20% Al_2O_3, there will result an emulsion which may be diluted with water. If the fatty or waxy substance has a very low acid value, or none at all, as, for instance, pure waxes or pure fats or unsaponifiable substances, such as paraffin, ceresine, mineral oil, fatty alcohols, emulsions may be obtained by adding higher fatty acids or oily acids, in particular those with 16 and more carbon atoms, to the fatty or waxy substances. In general, about 10% of these acids, on the weight of the fatty or waxy substances, will be sufficient. When using materially larger quantities of the fatty acids, the formation and the stability of the emulsion will suffer, whereas, on the other hand, very good emulsions will often be obtained with less than 10% of fatty acids. Emulsification may also be obtained with substances of low acid value, such as many waxes or glycerides. Thus, mixtures of montan wax of a low acid value and paraffin, or of tallow of a low acid value and paraffin, or tallow and mineral oil will also be emulsifiable.

It will further be possible to add subsequently to the emulsion substances which by themselves are not emulsifiable by a solution of basic aluminum salts, for instance, paraffin oil to the above hard wax emulsion.

There may also be used, in place of the fatty acids, their alkaline soaps or soap-like, capillary-active organic compounds, such as sulphonated oils, salts of aromatic or hydro-aromatic or aliphatic sulphonic acids, of sulphonated fatty alcohol, of condensation products of fatty and oily acids with amino- or oxy-ethane sulphonic acid, or their homologues or derivatives, or with albumin cleavage products. Free acids of these compounds will also be suitable. When producing emulsion such addition may be made to the substance to be dispersed and also to the aluminum salt solution, according to the solubility of the additions. As in the above mentioned use of fatty acids 10% or less of these additions, on the weight of the fatty or waxy substances, are sufficient.

In many cases it will be of advantage to add organic solvents to the substances to be emulsified, such as, preferably halogenated, aliphatic, aromatic or hydroaromatic hydrocarbons. By this is attained, in particular with high-melting fatty or waxy substances, lowering of the melting point and in consequence thereof easier emulsification. Especially aluminum salt solutions must not be heated so high for emulsification. This will be of advantage for the reason that intense heating may cause reduction of their emulsifying power. Besides, if solvents are used with a specific weight exceeding 1, such as, for instance, chlorinated hydro-carbons, that of the dispersed phase will be increased and adapted to that of the aqueous phase, thus augmenting the stability of the emulsions. The addition of the solvent also permits the production of more concentrated emulsions and imparts to them and their dilutions a good wetting-out property.

Finally, the aluminum salts may be replaced entirely or partly by suitable salts of tetravalent metals, such as zirconium, thorium, uranium or titanium. Subsequent addition of salts of this kind to the finished emulsions, prepared by means of basic aluminum salts, will also be possible.

The proportions of quantities between the substances to be dispersed and the salts depend on the concentration of the emulsion to be produced. It is to be understood in general that in producing concentrated emulsions, involving in the present case those containing about 80% or less of water, the proportions of quantities of both components may lie within very wide limits. Stable and dilutable emulsions may be obtained with proportions of one part of aluminum oxide or the oxide of one of the tetravalent metals to about one half up to seven parts of the fatty or waxy substance to be dispersed. The more diluted the emulsion to be produced is, the higher

must be, proportionally, the quantity of the metal salts.

The emulsions, prepared by one of these methods are stable in concentrated and in diluted condition. If the product is allowed to stand for a prolonged period creaming-off will take place, this may be easily re-mixed by stirring. Emulsions containing protective colloids, on the contrary, are subjected to the risk of separations if the protective colloid is not sufficient any longer to maintain the degree of division obtained by mechanical crushing. Separations of this nature cannot be re-mixed by simple stirring. Hence, this also is to be regarded as an advantage, quite apart from saving protective colloid, which only presents a non-participating substance. Besides, emulsions prepared according to the present invention, are generally easier diluted by water than those containing protective colloids. Gelatine is frequently used as protective colloid and the emulsions prepared with them are very thick and dilutable with water only after having been melted. The emulsions according to the invention may be easily diluted with cold or warm water.

The emulsions may be used for a great variety of purposes, depending on their combination, namely, for building and painting purposes, as lubricants, in the pharmaceutical industry, in the manufacture of paper and in finishing textiles and leather. If the emulsions contain fatty or waxy substances, suitable for water-repelling impregnation of textiles, the use of salts of tetravalent metals, if necessary, in addition to aluminum salts, resistance of the water-repellent effect may still be improved against laundering or dry cleaning.

The following samples serve to illustrate the subject matter of the present invention without, however, limiting its scope.

Example 1.—20 kg of a solution of basic aluminum formate (20% Al_2O_3 and 28% of formic acid) are placed into a turbo-mixer and diluted with 40 l of hot water. 10 kg of melted hard wax (melting point about 70° C., acid value 19, saponification value 21, acetyl value 85) are added at a temperature of 70° C. After mixing 15–20 minutes the emulsion is stirred until cold and forms an uniform mass which is easily dilutable with cold or warm water.

There may also be emulsified only 8 kg of hard wax and after stirring it for 10 minutes mixed with 5 kg of melted paraffin. The emulsion is highly suited, for instance, for water-repellent impregnation of textiles, paper or leather and is diluted with water for this purpose, amounting to 20 to 100 times the quantity used.

Example 2.—There is prepared, by dissolving commercial aluminum hydroxide in acetic acid, a solution of aluminum acetate containing 6% Al_2O_3 and 14% of acetic acid. 20 kg of this are diluted with 30 l of hot water and mixed under pressure in an emulsifying machine with 10 kg of melted soft montan wax (melting point 48° C., acid value 22). The thus produced emulsion has similar properties as that mentioned in the foregoing example. It may also be used for impregnating building materials and other surfaces.

Example 3.—30 kg of a basic aluminum formate solution (22% Al_2O_3 and 31% of formic acid) are diluted with 60 l of hot water and placed into a turbo-mixer. A melted mixture of 20 kg of paraffin and 10 kg of paraffin oil and 3 kg of oleic acid is added with stirring. After agitating about 10 minutes a thin, liquid and easily dilutable emulsion will have formed.

Example 4.—There are melted 30 kg of ozokerite (melting point about 60° C., acid value 3), 1,6 kg of commercial cetyl alcohol and 1,7 kg of oleic acid, slowly stirring the mixture into 100 kg of a basic aluminum formate solution, containing 4,5% Al_2O_3 and 6,2% of formic acid, heated to about 70° C. and contained in a turbo-mixer. After agitating about 10 minutes there will have formed a liquid, uniform and easily dilutable mass.

Example 5.—An emulsion is also formed in the manner described from 20 kg of an aluminum formate solution with 20% Al_2O_3 and 28% of formic acid, 5 kg of mineral oil (specific gravity 0,945) and 0,5 kg of montan acid.

Example 6.—To 10 kg of a basic aluminum formate solution (20% Al_2O_3 and 28% of formic acid) is added a solution of 100 g of the sodium salt of an alkylated naphthalene-sulphonic acid in 15 l of water, the whole is heated to 75° C. and, together with 15 kg of melted paraffin, is pressed three times through a nozzle. Prior to the second passing-through are added 20 l of hot water. The emulsion is then stirred until cold.

Example 7.—2,5 kg of montan soap, obtained by melting montan wax together with a calculated quantity of solid potassium hydroxide, diluted with a small quantity of water, are dissolved in 30 kg of ceresine and 17,5 kg of commercial cetyl alcohol, by heating to 100–120° C, and the hot mixture is added to 250 kg of a basic aluminum acetate solution (8% Al_2O_3 and 14% of acetic acid) of about 60° C and contained in a turbo-mixer. After agitating for 25–30 minutes at about 75° C the emulsion is stirred until cold.

If to the waxy mixture are added prior to emulsification 25 l of an organic solvent (trichlorethylene or tetrahydronaphthalene), emulsification may be carried out at a lower temperature than 75° C.

Example 8.—To 5 kg of a basic aluminum chloride solution (20% Al_2O_3 and 21% of HCl) is added 1 l of a 10% aqueous solution of the sodium salt of tetralene-sulphonic-acid, the mixture is heated in a turbo-mixer to 75° C and 2 kg of hydrogenated train oil (melting point about 60° C) slowly added. After this 2 l of hot water of a temperature of 90° C are stirred into the mass and after 30 minutes of treatment the emulsion is stirred until cold.

There may be used in place of the sodium salt also the same quantity of the free tetralene-sulphonic-acid or the acidic sulphuric ester of cetyl alcohol.

Example 9.—There is added to 80 kg of melted hard wax (melting point 72° C, acid value 12, saponification value 15) 25 l of carbon tetrachloride and the mixture, having a temperature of about 70° C, is slowly added and stirred into 100 kg of an aqueous aluminum formate solution (13% Al_2O_3 and 18% of formic acid), having a temperature of about 40° C, and contained in a turbo-mixer. After agitating for about one hour, whereby the temperature must not rise above 50° C, are added 50 l of warm water, stirring the mixture until cold. The emulsion, also after dilution, has excellent wetting-out property and is highly suitable for impregnation purposes.

Example 10.—9,5 kg crystallized zirconium oxy-chloride and 4 kg of crystallized sodium acetate are dissolved in 30 l of water and the heated solution is repeatedly pumped-through with the

aid of a nozzle, together with 15 kg of melted hard wax of the foregoing example.

Example 11.—9 kg of a basic aluminum formate solution (20% Al_2O_3, 28% formic acid) are mixed with 6 kg of a thorium acetate solution (obtained by dissolving 1,6 kg crystallized thorium nitrate and 0,8 kg of crystallized sodium acetate) and diluted with 30 l of hot water. This solution is placed into a turbo-mixer and treated for about 10–15 minutes and at about 70° C, together with 15 kg of a wax (melting point 56° C, acid value 14, saponification value 43), whereby an emulsion will have formed.

ADALBERT MÜLLER.

Published May 25, 1943

Serial No. 327,512

ALIEN PROPERTY CUSTODIAN

FLUE GAS CONTROL DEVICES

Guido Wünsch and Herbert Bulnheim, Berlin, Germany; vested in the Alien Property Custodian

Application filed April 2, 1940

This invention relates to improvements in furnaces and more particularly to a device for controlling the draught of flue gases coming from a furnace.

The main object of our invention is to provide a simple and inexpensive arrangement for automatically controlling the flow of flue gases in such a manner that, in spite of changes in the rate of flow as well as in spite of any other influences, as for instance by wind, gusts or the like, on the chimney, the draught will be maintained substantially constant.

Other aims, objects and distinguishing features of our invention will be apparent from the following description in connection with the accompanying drawings showing by way of example only some embodiments of the invention.

In the drawings Fig. 1 represents a gas heated stove the flue gas conduit of which communicates with the chimney and is provided with our new useful draught control device.

Fig. 2 is a perspective view of the flue gas conduit comprising a damper and temperature responsive means for controlling it.

Figs. 3 and 4 represent two other modifications of the control device.

Referring now to Fig. 1 a gas heated stove comprises in well known manner a gas supply burner 2 and radiants 3 mounted above said burner so as to be heated thereby. A chamber 4 is provided for receiving the upwardly flowing flue gases and communicates with a flue gas conduit 5 leading to a chimney 6. In the conduit 5 a damper 7 is provided for varying the flow cross section in response to the draught to be controlled. For automatically controlling the damper 7 a temperature responsive means—as more fully shown in Fig. 2—is operatively connected to the damper and heated by transmission of heat from the flue gases or from conduit 5 and simultaneously cooled by the atmospheric air.

As may be seen from Fig. 2, according to this embodiment the temperature responsive means is shown to be a bi-metallic strip 8, the outer end of which is connected to a rod 9 which is rotatably connected to an arm 10, the arm 10 being fastened to the axis 11 of the damper. The axis 11 is rotatably mounted at 12 and 13 in the wall of the conduit 5. For mounting the bi-metallic strip 8 at the conduit 1 a tube piece 14 is arranged on the outside of the conduit 5 in front of the damper 7. The inner end of the strip 8 is secured in any suitable manner to the piece 14. Within said tube piece 14 the wall of the conduit 5 is provided with an orifice 15 so that a portion of the flue gases flows out through the orifice 14 into the piece 14 as soon as a pressure in the conduit in front of the damper 7 exceeds the atmospheric pressure, whilst atmospheric air enters the conduit through the orifice 15 as soon as the pressure therein is smaller than that of the atmospheric air. Accordingly the temperature of the bi-metallic strip will either be increased by the outflow of flue gases through the orifice or decreased by the inflow of air through the orifice, as the case may be, in dependence on the pressure condition in the conduit in front of the damper.

If it is assumed that the draught in the conduit is equal to the value to be maintained constant, the damper 7 will have a position relative to the bi-metallic strip at which the pressure in the conduit 5 is equal to the atmospheric pressure. Under this circumstance a flow through the orifice 15 cannot take place. Therefore, a temperature equilibrium in the bi-metallic strip exists between the cooling action by the atmospheric air and the heating action from the conduit 5 and the tube piece 14. The position of the bi-metallic strip 8 as determined by the temperature equilibrium corresponds to the draught to be maintained constant. If due to an increase in the rate of flow of the flue gases the pressure in front of the damper 7 increases, the temperature of the bi-metallic strip determined by the equilibrium will be likewise increased by the outflow of flue gases through the orifice. Thus the outer end of the bi-metallic strip is raised and the flow cross section at the damper 7 is increased as is apparent from Fig. 2. In this way the draught will be increased and the pressure at the orifice decreased as long as the increased draught causes an air inflow into the conduit and an increased cooling action of the bi-metallic strip. As a result of this operation, a new equilibrium is obtained at which in spite of the increased rate of flow of flue gases the pressure in the conduit, i. e. the draught, remains the same as before.

If on the other hand due to a decrease in the rate of flow of the flue gases the draught in front of the damper 7 will be increased, the decreased pressure causes an air inflow through the orifice into the conduit 5 thereby increasing the cooling action of the bimetallic strip 8 so that the outer end thereof is lowered and the flow cross section of the damper is decreased. Hence the pressure in front of the damper will again be increased as long as due to the increased pressure an outflow of the flue gases through the orifice 15 takes place. In a similar manner as that de-

scribed above a new equilibrium of the damper 7 is obtained.

As will be readily understood, the invention is not restricted to the special case in which the pressure in the conduit 5 corresponding to the draught to be maintained constant will be controlled so as to remain equal to the atmospheric pressure. On the contrary, it may be desirable to control the damper 7 in such a way that the temperature equilibrium in the bi-metallic strip exists if either a small air inflow enters the orifice 15 or a small outflow of flue gases takes place through the orifice so that at this equilibrium the bimetallic strip is additionally cooled by an air inflow or additionally heated by a flue gas outflow. In this respect it may be submitted that the pressure obtained by the controlling operation depends on the one hand on the supply of heat to the bi-metallic strip and on the other hand on the removal of heat by the air, i. e. the mean temperature of the strip, and furthermore on the stroke or deflection of the strip per temperature unit.

At all events we prefer to have the damper 7 entirely closed if the furnace is out of operation.

In order to prevent the flue gases from continously entering into the room, it may be advisable to determine the temperature equilibrium at which a small air flow enters the conduit 5 through the orifice 15, i. e. at which the pressure in the conduit in front of the damper due to being maintained constant is slightly smaller than the atmospheric pressure.

In the other case in which a portion of the flue gases continuously flows out through the orifice, means may be provided for reintroducing the outflow of flue gases into said conduit.

A modified construction comprising such means is shown in Fig. 3. According to this embodiment the conduit 5 does not only possess the orifice 15 in front of the damper but also a second orifice 16 behind the damper. In addition a hood 17 is mounted in any convenient manner at the wall of the conduit 5 above the orifice 16, this hood being formed so as to receive the discharge flow of flue gases from the bimetallic strip.

Furthermore this embodiment differs from that of Fig. 2 therein that the bi-metallic strip is arranged in a casing 14′ above the orifice 15 in order to utilize the buoyancy of the flue gases for bringing about a closer contact between the gases and the bi-metallic strip and for facilitating the reintroduction of the gases. In this instance the bi-metallic strip is coiled in the form of a spiral around the axle 11 of the damper 7, the inner end of the strip being fastened to the axle and the outer end to the casing 14′.

In all other respects the construction and operation of the controlling device according to Fig. 3 is the same as that shown in Figs. 1 and 2 as fully described above. It is a matter of course that the embodiment shown in Fig. 3 may be modified so as to omit the second orifice 16 and the means 17.

Fig. 4 deals with another modification according to which the casing 14″ surrounding the strip 8 is a tube arranged substantially coaxially with the axle 11 of the damper 7. In this event the orifice 15″ in the wall of the conduit 5 has a segmental form in view of the necessity of arranging the orifice in front of the damper.

Regardless of the special form and arrangement of the bi-metallic strip and the casing, we prefer to provide means for limiting the angle of rotation of the damper 7 so as to ensure that in one end position the conduit 5 is entirely closed whilst in the other end position the damper 7 does not reduce the flow cross section of the conduit 5. To this end a stop 18 is fastened to the wall of the conduit 5 in proximity to the damper axle, this stop projecting into the circular part of the damper which therefore in one end position touches the upper side and in the other end position the lower side of the stop.

Likewise the casing 14, 14′ or 14″ may project partly into the conduit 5. At all events, it is essential merely that a sufficient cooling action of the bimetallic strip by the air is ensured so that the mean temperature resulting from the cooling action and the heating action sufficiently differs from the air temperature and the flue gas temperature. The greater the difference between the mean temperature and the air temperature, the greater is the sensitivity of the controlling system, since at a great temperature divergence already a small air inflow or a small flue gas outflow causes a considerable controlling action. Hence the controlling exactness amounts to .02 millimeter water head.

In the above description reference is had to a gas heated stove for the purpose of illustration only and it is to be understood that the draught controlling device according to my invention may be applied just as well to any gas heated apparatus or furnace of any other kind. However, we desire to point out that my control system is destined for furnaces in which the heat produced is substantially independent of the draught of the flue gases. This is the case for instance in any gas heated apparatus or system and in any oil burner installation. It is apparent that in furnaces of this kind the heat produced remains practically uninfluenced by the controlling operation of the damper in the flue gas conduit.

GUIDO WÜNSCH.
HERBERT BULNHEIM.

PUBLISHED
MAY 25, 1943.
BY A. P. C.

G. WÜNSCH ET AL
FLUE GAS CONTROL DEVICES
Filed April 2, 1940

Serial No.
327,512
2 Sheets-Sheet 1

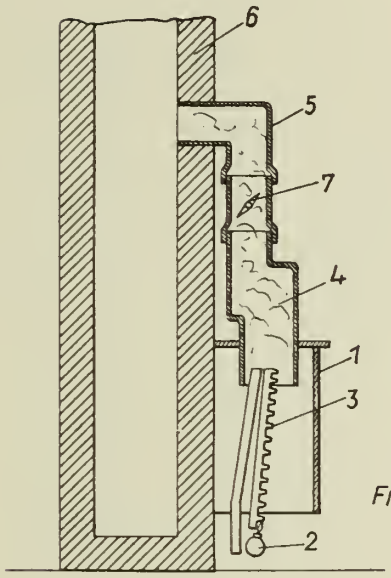

Fig. 1

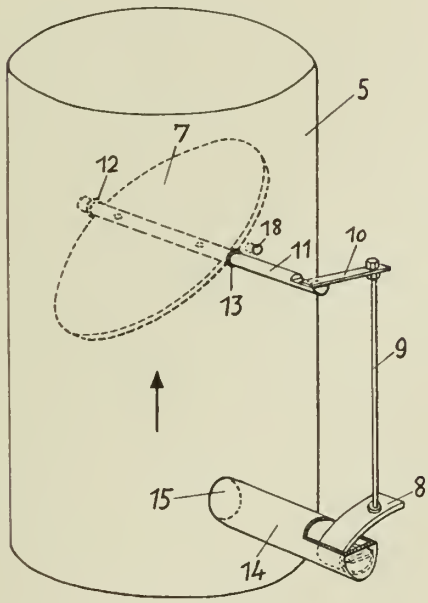

Fig. 2

Inventors
Guido Wunsch and
Herbert Bubnheim

By A. D. Adams
Attorney

PUBLISHED
MAY 25, 1943.
BY A. P. C

G. WÜNSCH ET AL
FLUE GAS CONTROL DEVICES
Filed April 2, 1940

Serial No.
327,512
2 Sheets-Sheet 2

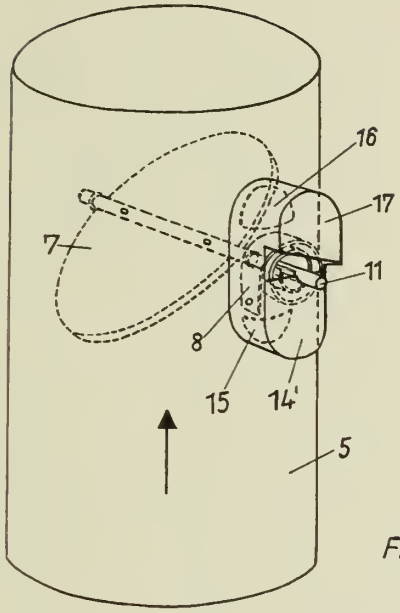

Fig. 3

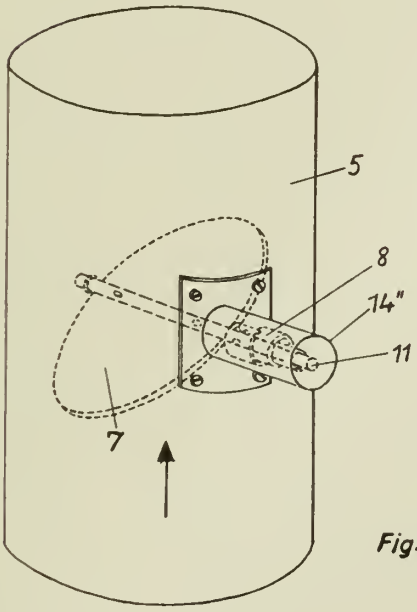

Fig. 4

Inventors
Guido Wunsch and
Herbert Bulnheim

By A. P. Adams
Attorney

Published May 25, 1943

Serial No. 327,769

ALIEN PROPERTY CUSTODIAN

ELASTIC SUSPENSIONS OF AXLE AGGREGATES

Karl Wilfert, Sindelfingen, Germany; vested in the Alien Property Custodian

Application filed April 4, 1940

This invention relates to an improved connection of the axle aggregates with the vehicle top, elastic members being arranged between the axle aggregate and the vehicle top.

The invention aims at decreasing or preventing the noises being transferred through the wheels onto the vehicle top. With the expression vehicle top particularly the frame with the carriage body or a self contained carriage body is meant, connecting the axles directly. Above all the invention is important for bodies manufactured of sheet steel, because such steel bodies are specially inclined to vibrations or to a roaring noise, proceeding from the oscillations of the wheels.

A further object of the invention is an elastic connection of the vehicle axles with the vehicle top in such a manner that, in spite of interposing elastic means, a secure position of the car on the road is reached, free of undesirable vibrations, difficult to deal with. For this purpose the elastic means particularly are so arranged and provided that they allow a greater yielding capacity between the axle or a carrier for the axle parts, and the vehicle top in approximately vertical direction, but only a small yielding capacity in lateral direction. Specially practical in this case may be the arrangement of the elastic members in such a way, that the main yielding capacity between the carrier and the vehicle frame may exist in a direction coincident with the shock direction of the wheels. The shock direction principally results here by the fact that the shock forces arising at the wheel during running have in longitudinal direction a small horizontal and backward directed component and a larger vertical and upward directed component, so that the resulting shock force will be directed steeply upward and backward, deviating from the perpendicular by an angle of 5° to 30°.

Furthermore the invention provides an elastic connection of such a kind that the forces arising at the axle will be received very securely, and which is at the same time particularly simple with respect to construction and mounting. This object will be reached most completely by means of rubber bushes making a connection between the axle and the vehicle top and being preferably so arranged that the axles of the bushes extend about vertically and if possible in the shock direction of the wheels. By arranging two rubber bushes axially to each other and in a certain distance from each other, a particularly good reception of the forces and moments can be obtained.

Furthermore the invention provides an arrangement in which the axles of all wheels, i. e. the front and the rear wheels of the vehicle are connected yieldingly with the frame or the body. By these means the advantages aimed at will be reached most completely. Eventually the axle piece carrying the wheels yieldingly may be connected to the vehicle by one or more thrust members, between the axle piece and the vehicle top, elastic members being interposed, allowing a small swinging motion of the axle together with the thrust member around its pivoting point at the vehicle top.

In the drawings several types of the invention are illustrated by way of example.

Fig. 1 shows a perspective illustration of a car frame in which the front axle aggregate as well as the rear axle aggregate are yieldingly connected to the frame by means of rubber-metal members.

Fig. 2 shows a partial sectional view of the rear axle aggregate according to Fig. 1, in which the rubber-metal connection between the rear axle aggregate and the frame is shown in section.

Fig. 3 shows a view from above onto the arrangement according to Fig. 2.

Fig. 4 shows a section through the line B—B of Fig. 2.

Fig. 5 is a partial view of the front axle aggregate according to Fig. 1, in which the rubber metal connection between the front axle aggregate and the frame is again shown in section.

Fig. 6 is a view from above onto the arrangement according to Fig. 5.

Fig. 7 shows a section through the line A—A of Fig. 5.

Fig. 8 shows a somewhat different form of the rubber metal connection in a sectional view corresponding to Fig. 4.

Fig. 9 shows a further alteration of the form of the rubber metal connection in a sectional view corresponding to Fig. 7.

Fig. 10 shows the rubber metal connection according to Fig. 2 or 8 in enlarged scale.

A further type of a vehicle formed according to the invention is illustrated in the Figs. 11 to 14, in which Fig. 11 shows a rear axle aggregate of this vehicle in rear view,

Fig. 12 a longitudinal section through line C—C of Fig. 11,

Fig. 13 a sectional view of the front axle aggregate, while

Fig. 14 shows in perspective illustration a relative to Fig. 13 somewhat altered form of the front axle suspension.

A third type of a vehicle formed in accord-

ance with the invention is illustrated in the Figs. 15 and 16 or 17, in which

Fig. 15 shows the rear axle arrangement,

Fig. 16 the front axle arrangement of this vehicle in side view, partially in section and

Fig. 17 a corresponding, somewhat altered front axle construction for this vehicle.

In the design according to the Figs. 1 to 7 the frame is formed by the longitudinal beams 1 and by the cross beams 2 rigidly connected with it. Furthermore a rear cross beam 3 for the rear axle and a front cross beam 4 for the front axle is provided, being connected to the frame, interposing a metal connection 5, 6, 7 and 8 to the longitudinal beams of the frame.

To the cross beam 3 the differential gear 9 is rigidly or yieldingly connected. To the casing for the gears the swinging semi axles 10 with the rear wheels 11 are laterally swivelled. For the shock absorption serve the spiral springs 12 secured on one side to the cross beam 3 and on the other side to the semi axles 10. The drive is transferred by the motor (not shown) through the Cardan shaft 13 and the differential gear 9 onto the swinging semi axles 10.

The cross beam 4 furthermore carries the front axle aggregate with the steering gear, the front wheels 14 being secured for instance to a spring carrier 17 by means of two leaf springs 15 and 16 arranged on top of each other, the carrier being secured to the cross beam 4. To the cross beams 3 and 4 furthermore the shock absorbers 18 are fastened.

The details of the rear axle bearings illustrated in the Figs. 2 and 4 show the rubber-metal connection 21, 22, 23, the inner metal sleeve 21 of which is in connection with the longitudinal frame carrier 1 through the bolt 20 and its outer metal sleeve 23, being in connection with the cross beam 3 of the frame. By these means the rubber sleeve 22 which is securely fastened to the sleeves 21 and 23, for instance by vulcanisation, is inserted into the power transmission between the cross beam 3 and the longitudinal beams 1, and the small high frequency oscillations which, as is known, cause the roaring noise are kept away from the body.

In the Figs. 5 to 7 the connection of the front cross beam 4 or of the front axle aggregate to the longitudinal beams 1 of the frame is illustrated. Here the rubber bushing 27 is connected to the longitudinal beam 1 of the frame by means of an inner metal sleeve 26 and a bolt 25, and to the cross beam 4 by means of an outer sleeve 26, the rubber being preferably adhesively connected to the metal sleeves by vulcanization.

With the design according to Fig. 8, showing a somewhat altered connection of the rear cross beam 3 with a longitudinal beam 1, the bolt 20 is not journaled directly in the longitudinal beam of the frame, but for instance in a special intermediate casing 19, being welded to this beam. A similar design for the front axle is shown in Fig. 9.

In Fig. 10 the rubber metal connection, for instance for the rear axle, is shown in enlarged scale. Evidently the inner sleeve 21 extends from the middle to both sides somewhat conical as shown at 29 and 30, receiving in a bore 31 the connecting bolts (here not shown), for instance the bolt 20 or the bolt 23 when applied to the front axle. The inner sleeve 21 is surrounded by the rubber sleeve 22 which again is enclosed and held by the outer sleeve 23. The outer sleeve has the solid supporting flange 32 and the screwed-in flange 33 between which for instance the crossbeams 3 or 4 are held. Furthermore the sleeve 23 is so shaped that between the two flanges 32 and 33 it is cylindrical at both ends, however at 34 it is conical, and more conical than the surfaces 29 and 30 of the inner sleeve. The result will be that the thickness of the rubber sleeve in axle direction is of unequal size, and that according to the size of the arising forces a progressive damping action will take place. At the same time the loading forces acting in vertical direction will be sure to be securely received.

With the further designs given e. g. in the Figs. 11 to 14 the frame for instance consists of longitudinal beams 35 ending in backward formed arms 36 and 37 respectively, arranged in a vertical plane, essentially one above the other. In this place however a correspondingly shaped self-supporting body could be used. The frame is similar to the one shown in Fig. 1, provided with cross beams connecting rigidly the the longitudinal beams, and has at the same time further cross beams 38 and 39 being yieldingly connected to the longitudinal beams in the manner hereafter described, and serving as carrying pieces for the rear axle and the front axle. Onto the rear crossbeam 38 the rear axle gear 40 is secured rigidly or with interposition of rubber pieces tightened by means of clamping screws or in any other suitable way. The rear wheels 41 are journaled on the axle casing 40 for instance by means of pivoted semi axles 42 swingingly secured by cylindrical pins and supported by unguided spiral springs 43 thrusting with their upper end against the ends of the cross beam 38. On the ends of the cross beam also the shock absorbers 44 are arranged.

The yielding connection of the cross beam 38 with the longitudinal beams 35 is provided as follows: Between the forked ends 36 and 37 of each of the longitudinal beams of the frame conical pins 45 and 46 are inserted and secured by means of screws 47 and 48, serving for the reception of the conical rubber bushings 49 and 50 which are surrounded by a specially formed steel sleeve 51. The arrangement is thus, that the axis 52 of the parts 45 to 51 forms an angle with the road, amounting to about 75°, the axis 52 extending steeply forward and downward meets the road before the middle of the wheel.

Evidently the entire axle aggregate consisting of the crossbeam 38, the differential gear 40, the semi axles 42, the wheels 41, the springs 43 and the shock absorbers 44 is so connected to the frame, interposing the rubber bushings 49 and 50, that there is no metallic contact between the axle aggregate and the frame and the car body respectively. An inclined arrangement of the axis 52 of the yielding connection has the advantage that the shocks which the wheel is met with on its course on the road are effective about in the axle direction of the rubber bushings so that the yielding capacity of these rubber bushings in their longitudinal direction may fully be made use of. The distance between the rubber bushings 49 and 50 is chosen comparatively great; their guided length i. e. the distance *e* of the upper end of the upper rubber bushing 49 from the lower end of the rubber bushing 50 amounts to more than half the wheel diameter in the illustrated example, with the effect that the axle aggregate is most securely supported. The rubber bushing 49 may then be within the range of the upper wheel covering,

and the rubber bushing 50 within the range of the lower wheel covering.

The front cross beam 39 is formed essentially as a hollow beam, as shown in Fig. 13, through which the longitudinal beam 35 of the frame is led, having a vertical bore 53 in the plane of the cross beam. Into this bore, by means of a metal sleeve 54 a rubber sleeve 55 is inserted being for instance vulcanised to this metal sleeve, through which a connecting bolt 56 is led, fastened in the upper and lower wall of the cross beam 39. Preferably the connecting bolt is also fastened to the rubber sleeve 55 by means of vulcanisation. The wheel 57 of the vehicle is guided in parallel by means of the two guiding levers 58 and 59 which are jointed to the cross beam 39. For the shock absorption of the wheel serves the spiral spring 60 the upper thrust bearing of which is also on the cross beam at 61. The bolt 56 may be arranged perpendicular or in a certain angle to the road, for instance corresponding to the shock direction of the wheel.

The design according to Fig. 14 is distinguished from the one according to Fig. 13 only by the fact that the cross beam 39 is formed of two tubes or rods 62 and 63 connected to each other by the thrust bearing 61 for the springs 60.

With the design according to Figs. 15 and 16 the entire backward driving gear, consisting of the motor 64, the change speed gear 65 and the differential gear 66 is fastened by means of the two bows 67 and 68 to the metal sleeve 69 made in one or two pieces, and being journalled all around yieldingly on the frame 70, similar to Fig. 11. The shock absorption of the swinging semi axles 71 ensues by means of a laminated spring 72. The outer covering 73 enclosing the driving aggregate may be secured directly to the aggregate in order to avoid a metallic contact between it and the frame and the rest of the body.

As shown in Fig. 16 the frame 70 terminates into a fork the ends 74 and 75 of which serve for securing the bolt 76 penetrating the rubber bushing 77. The cross beam 80 carrying the laminated springs 78 and 79 (similarly to the illustration in Fig. 1), and being extended between the fork ends 74, 75 of the frame, is rigidly secured to one or two lateral thrust members 81 which are jointed on one side respectively by means of a joint 82—containing eventually a rubber insertion—to the frame, pivoting around a cross axle of the vehicle, and at the other side encircling with their sleeve-formed end 83, extended across the axle member the rubber bushing 77, interposing for instance a metal bushing 84 which might be vulcanised with it. In this case the springs 78 and 79 act in the same direction as the rubber bushing 77 arranged essentially tangentially to the swinging radius of the pertaining thrust member 81, in order to have the full benefit of its comparatively great yielding capacity in the axle direction of the bushing. The thrust member 81 may be arranged in the longitudinal center plane of the vehicle for instance at a crossbeam. As already hinted at, two thrust members at both sides of the frame or at both sides of the longitudinal center plane of the vehicle may be provided.

In the design according to Fig. 17 which might be used for instance in the place of the one according to Fig. 16 or also according to the Figs. 5–7 or 13–14 the axle member or cross beam member 87 carrying the front wheels by means of two laminated springs 85 and 86 arranged above each other, is yieldingly secured to the frame 70 by means of two rubber bushings 88 and 89 or by means of two pairs of such bushings, having each similarly to the before mentioned examples, a longitudinal axis extending slantingly to the road, but having in the longitudinal direction of the vehicle axes so transposed relative to each other that the bushing 89 will be before, and the bushing 88 will be about by the equal amount in back of the wheel center. The acting direction of the springs 85, 86 lies in this instance in a vertical plane.

In all cases the rubber bushings, as partly described above, can be rigidly connected with the parts penetrating or surrounding them, as bolts and sleeves, by means of vulcanisation. The connection may however be made in another suitable manner, for instance by pressing the rubber into fittings provided with corresponding flanges. Furthermore adjusting devices for adjusting the angle may be provided, for instance by forming the pins 45, 46, shown in Fig. 11, in the shape of eccentrics, or for instance by lengthening or shortening the arms 36, 37 in the longitudinal direction of the vehicle by suitable arrangements. Also the pivoting point 82 in the design according to Fig. 16 might be displaced for this purpose in vertical direction.

The invention is not limited to the types illustrated and described above. Particularly the front- and rear axle constructions used for the different designs may be interchanged, and the rear axle constructions may be used as front axle constructions by making correspondent alterations, and vice versa.

Under circumstances it may be sufficient if only one of the axle aggregates will be connected yieldingly with the vehicle top, while the other axle aggregate is rigidly secured to it. Preferably both axle aggregates will be connected yieldingly with the vehicle top. The invention may be applied to all kinds of wheel suspensions, consequently also for rigid axles, but preferably it is to be applied to swinging axles, as here the origin of noises and vibrating symptoms is particularly to be apprehended.

As frame a usual frame formed of longitudinal and cross beams may be used or for instance a frame consisting of a central longitudinal beam, extending eventually at one or at both ends into a frame fork with two lateral fork arms, which may be understood by the expression of "longitudinal frame beam".

KARL WILFERT.

PUBLISHED

MAY 25, 1943.

BY A. P. C.

K. WILFERT

ELASTIC SUSPENSIONS OF AXLE AGGREGATES

Filed April 4, 1940

Serial No.

327,769

4 Sheets-Sheet 1

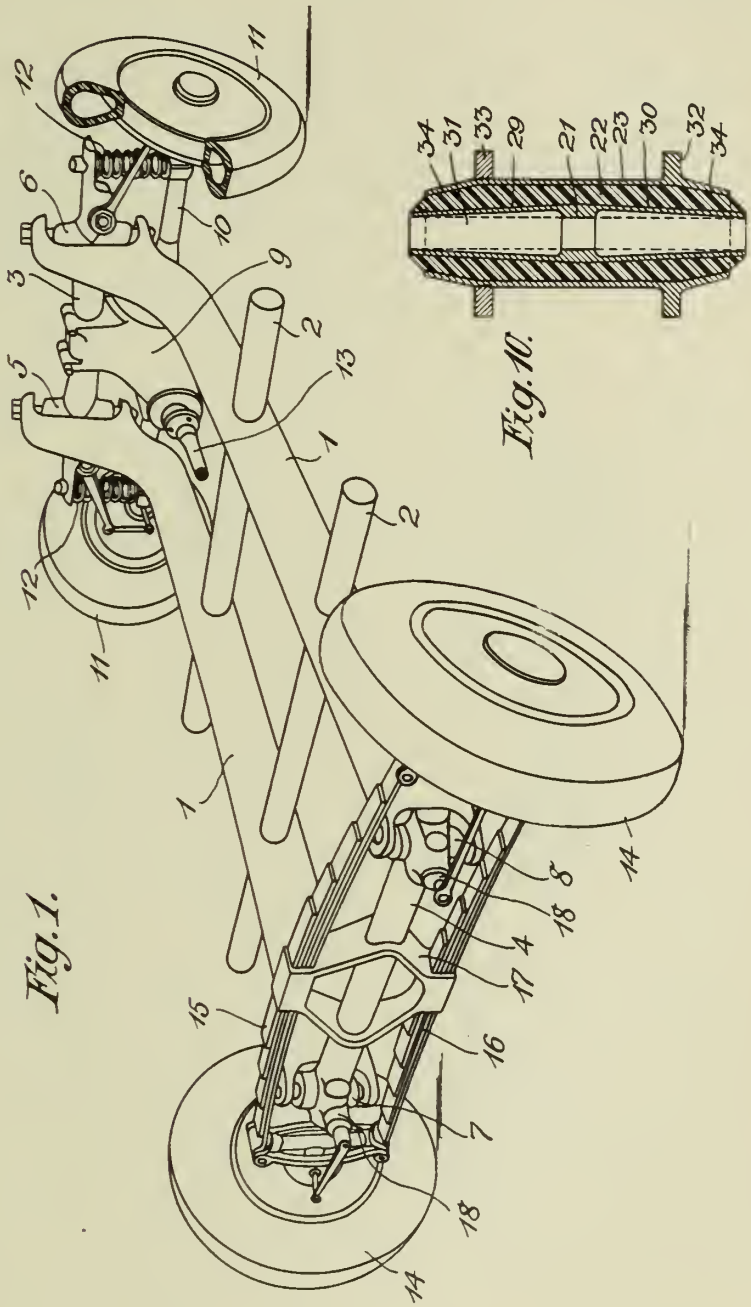

INVENTOR

Karl Wilfert

BY

A. A. Wicke

ATTORNEY

PUBLISHED K. WILFERT Serial No.

MAY 25, 1943. ELASTIC SUSPENSIONS OF AXLE AGGREGATES 327,769

BY A. P. C. Filed April 4, 1940 4 Sheets-Sheet 2

Fig. 2.

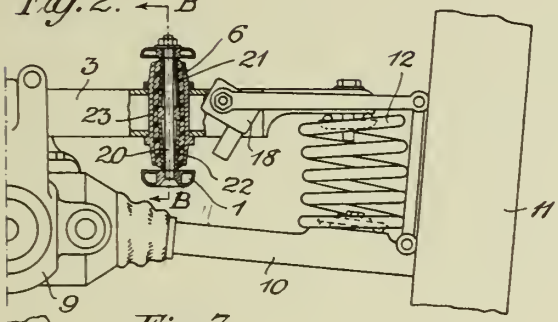

Fig. 4.

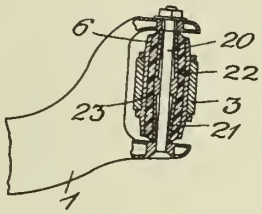

Fig. 3.

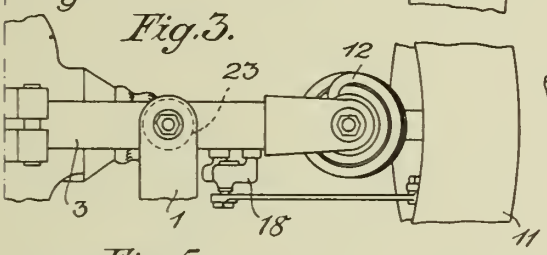

Fig. 8.

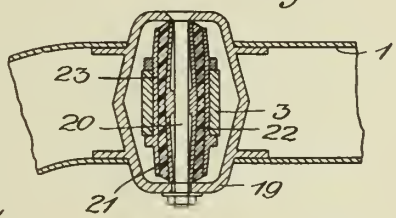

Fig. 5.

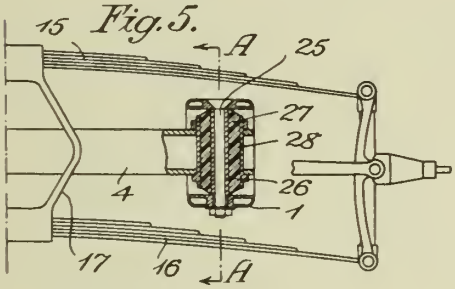

Fig. 7.

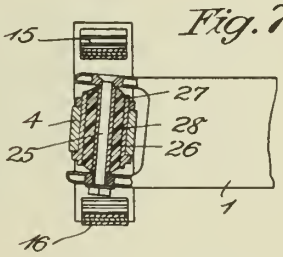

Fig. 6.

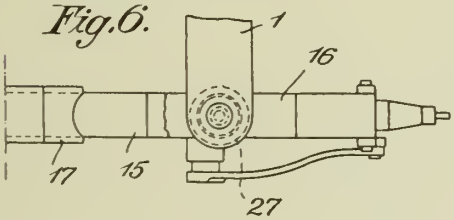

Fig. 9.

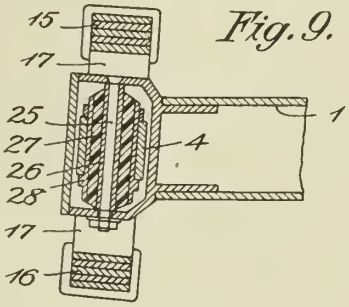

INVENTOR
BY Karl Wilfert
A. A. Wicke
ATTORNEY

PUBLISHED

MAY 25, 1943.

BY A. P. C.

K. WILFERT

ELASTIC SUSPENSIONS OF AXLE AGGREGATES

Filed April 4, 1940

Serial No. 327,769

4 Sheets-Sheet 3

Fig. 11.

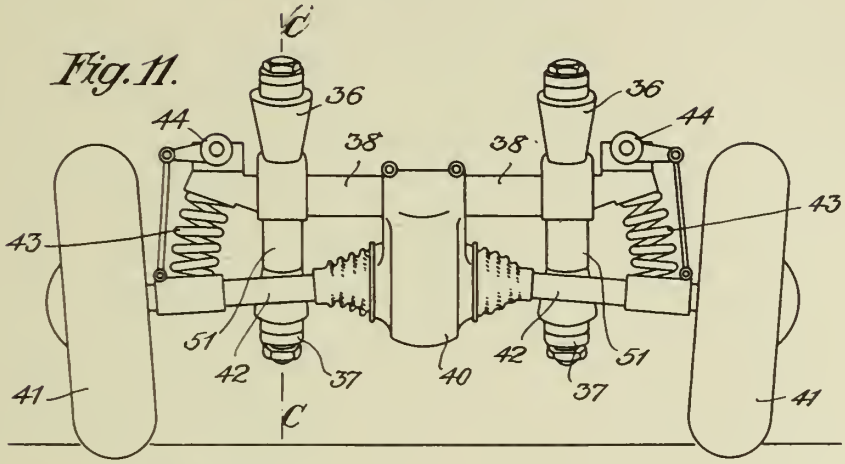

Fig. 12.

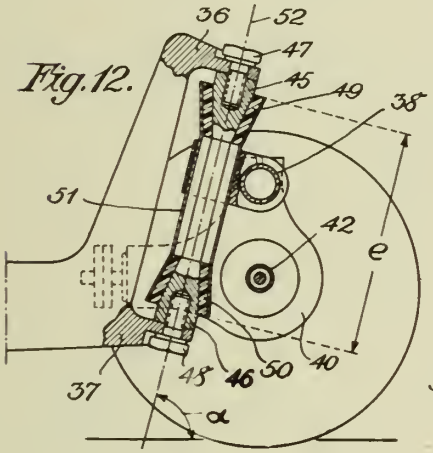

Fig. 13.

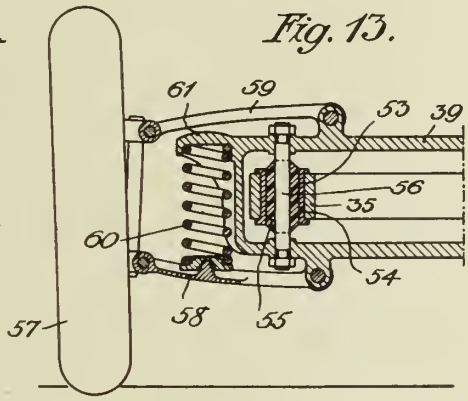

Fig. 14.

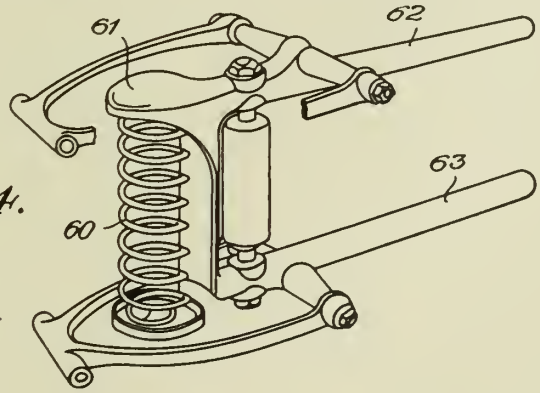

INVENTOR

Karl Wilfert

BY

A. A. Wenke

ATTORNEY

PUBLISHED

MAY 25, 1943.

BY A. P. C.

K. WILFERT

ELASTIC SUSPENSIONS OF AXLE AGGREGATES

Filed April 4, 1940

Serial No. 327,769

4 Sheets-Sheet 4

Fig. 15.

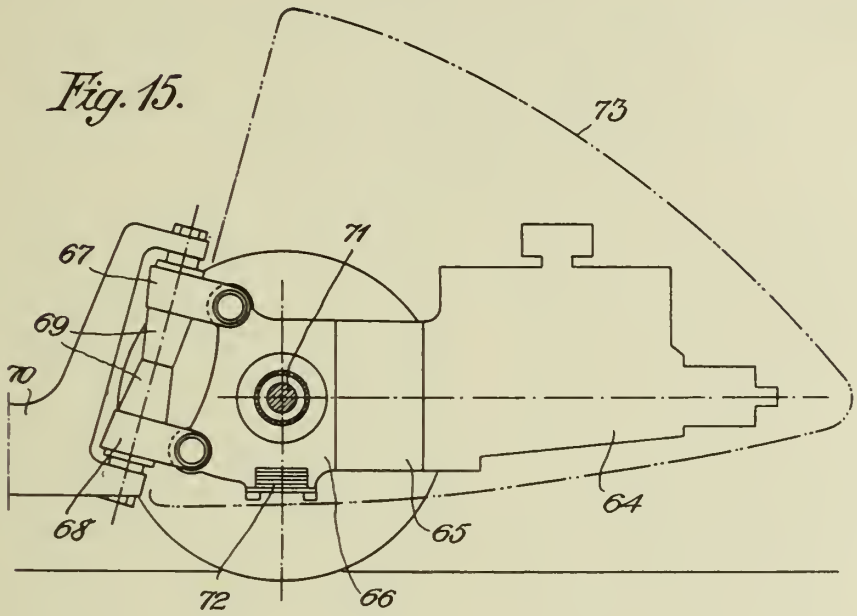

Fig. 16.

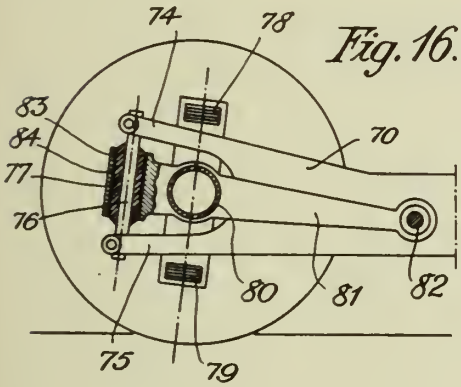

Fig. 17.

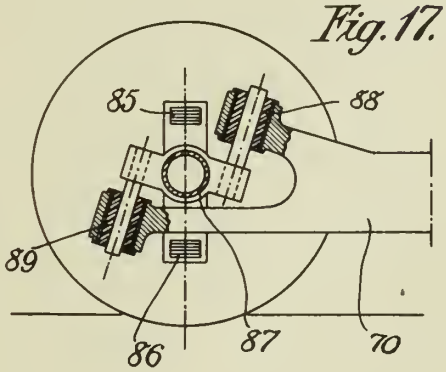

INVENTOR

Karl Wilfurt

BY A. A. Hirsche

ATTORNEY

Published May 25, 1943

Serial No. 328,859

ALIEN PROPERTY CUSTODIAN

FILM TREATING MACHINES

Walter Geyer, Berlin-Sudende, Germany; vested in the Alien Property Custodian

Application filed April 10, 1940

This invention relates to film treating apparatus, particularly developing machines, in which the film is exclusively or chiefly transported by means of toothless rollers.

In the known machines of this class the looped film passes over several rollers arranged one after the other at different levels, and the difficulty connected with the operation of such machines is to provide for slight uniform tension without subjecting the film to mechanical stressing or damaging it. In some of the known devices in which all rollers are driven through friction clutches the upper rollers have some lead over the last roller. In the rear of every shaft driven in this manner and supporting several rollers the film forms a loop the length of which serves for checking the amount thereof delivered and controlling the braking of the shaft through friction. Machines of this type are expensive, complex in structure, not absolutely reliable in operation, and stress the film due to the development of a relatively strong pull.

To overcome this drawback it has been proposed to employ a fixed drive without the complex mechanism of friction and brake for the lower rollers which then take care of the film transport whilst the upper rollers are loosely arranged on their shafts. The principle underlying the construction of such machines also provides for imparting to the last roller fixing the film speed and disposed at the outlet of the drying chamber a lower circumferential speed than to the film transport drum within the machine. When the film is in contact with the lower driven rollers, more film is transported within the machine than is drawn out of it by the last rollers with the result that the film loops increase in length and remain free of the lower rollers until the last drawing roller at the drying chamber has shortened them again and they are in more or less firm contact with the lower transport rollers. This kind of film transport involves constant sliding of the film and rollers, their relative motion being greatest when the loop is loosely suspended and smallest when the loop is drawn tightly against the roller. The pull of the film is of course subject to considerable fluctuations entailing corresponding differences in the tension of the loops, and as the slip between roller and film easily causes scratches, even the slightest relative motion of film and roller, particularly in case of large machines equipped with hundreds of such rollers, will finally produce visible mechanical injuries.

In order to keep these relative motions as small as possible and simultaneously to obtain the slightest possible film pull it has further been proposed to employ transport rollers of different diameters which are greatest at the beginning of the machine and gradually decrease toward the film outlet. Such an arrangement constitutes, however, only a small improvement as to film pull and film preservation. According to another proposal to reduce relative motion to a minimum, only some of the rollers are to have a fixed drive and decreasing diameters.

Although the devices mentioned have brought about certain improvements, they do not completely avoid mechanical injuries to the film and particularly fail to eliminate fluctuations of the pull or to reduce them to a minimum, which would be required to prevent mechanical damaging and, above all, stretching of the film. Stretching occurs particularly in case of incombustible film materials and increases the spacing of the perforations, at least partly, during development so that the projected pictures will not be steady and the film is damaged, since all projectors are designed for a spacing of perforations that is smaller than that of the raw film.

According to the invention, relative motion of the film and rollers is completely eliminated and a much more uniform film pull adjustable as to intensity is provided by causing the driving rollers to be carried along by the driving shaft through bearing friction, whereby relative motion is restricted to a roller and its driving shaft and slip between the film and its driving roller is avoided.

The bearing friction of the film driving rollers and that of the rollers driven by the film are adjusted so that the desired film tension results, the driving rollers being taken along by their shafts at a frictional resistance somewhat greater than the one that has to be overcome in case of the rollers drawn by the film. In further accordance with the invention the friction at which each roller is driven is such that substantially only those forces are transmitted to the film that are required for the film transport in the neighborhood of the roller, so that any number of toothless rollers may be arranged in succession.

Tensile stressing of the film, i. e., the film load, may further be kept constant by the arrangement that the driving power transmitted by friction to the driving rollers is smaller at a film load below the desired value than the bearing friction that has to be overcome at the driven rollers, whereas at a film load above the desired value the transmitted driving power is greater than

the friction to be surmounted at the driven rollers.

This is attained by utilizing the dependence of the intensity of friction upon bearing pressure which for the upper rollers is combined of the double film pull plus roller weight and for the lower rollers of double film pull minus roller weight, so that at equal film load the bearing pressure of the upper rollers is greater than that of the lower rollers. Friction at the upper rollers cannot fall below a minimum represented by the roller weight plus the minimum double film pull, whilst at the lower rollers, by suitable adjustment of the roller weight and film pull, the lowest possible friction may be brought down to zero. The lowest possible friction at the upper rollers, however, will be higher than at the lower ones, and for the same reasons. Depending on the desired film tension, the upper or lower rollers may therefore serve as driving rollers, the friction and thus the driving power transmitted to the roller by friction being in either case influenced by the film pull, so that at a decrease in film pull the friction and the driving power will be diminished in consequence whereof less film will be conveyed and the loops correspondingly increased in size. The tension to which the film is subjected can be readily adjusted by fixing the size of the inner and outer diameters of the rollers and the weight of the latter and by a corresponding construction of the bearings.

In a form of construction which has been found highly useful the lower rollers in the drying cabinet are made of synthetic material and disposed on brilliantly polished shafts of approximately 20 mm. diameter, and the upper rollers run in ball bearings. In the wet section, the lower rollers consist of synthetic material and are arranged on brilliantly polished shafts of approximately 20 mm. diameter, whereas the upper rollers are mounted on shafts of smaller diameter and their friction is, moreover, reduced by smaller seatings.

In further accordance with the invention the number of revolutions of the shafts driving the film transport drums by friction is regulatable so as to make possible any desired film tension.

It has been found particularly advantageous to make use of a continuous variable speed gear. The corresponding shafts may be driven also by a motor or motors, this arrangement being advisable when one or more dynamometers controlling the film pull, or similar devices, are provided for automatically, according to their strokes, insuring the desired speed of the shafts. The film transport according to the invention gives satisfaction in the developing section of the wet treatment as well as in the dry treating part, though it should be taken into consideration that the baths in the wet section partly vary the bearing friction, so that if the bearing construction in the dry section is retained in the wet section frictional conditions will be different and require a different speed of the shafts, which may also be regulated by a continuous gear to adjust the desired tension. When the differences are too great, the variations developing during wet treatment compared with dry treatment should be made allowance for in the construction and arrangement of the bearings.

The invention is illustrated by way of example in the accompanying drawing, in which

Figure 1 is a plan of a developing machine according to the invention;

Fig. 2, a perspective detail view of the developing machine;

Fig. 3, a section through a driving roller; and

Fig. 4 shows the dependence of friction on the film load.

In the drawings, 1 designates a drying cabinet and the numbers 2, 2′, 2″ refer, respectively, to the developing, fixing and washing tanks. The machine is driven by a motor 3, and the speed of the machine whereby the developing time is regulated is controlled by a change speed gear 4 by means of which a film drawing drum 5 is driven which determines the film speed. On the same shaft is mounted another gear 6 with the aid of which the shafts 7, 7′, 7″ and, by friction, the transport drums 8, 8′, 8″ are driven.

Between the main driving shaft 9 of the drying cabinet and the main driving shaft 11 of the wet section a change gear 10 is provided by means of which and of the gear 6 the speed of rotation of the shafts 9 and 11 is so regulated that the desired film tension, controllable by dynamometers, not shown, is attained.

Fig. 2 shows the film guide arranged in a tank 2. The main driving shaft 11 drives a shaft 12 on which the film transport rollers 13 are driven by friction the intensity of which is determined by the film pull, the weight of the roller and the construction of the bearing.

The shaft 12 is made of brilliantly polished V2A-steel on which the rollers 13 are disposed for instance in the manner shown in Fig. 3. The rollers 15 driven by the film and mounted on a shaft 14 run in ball bearings. As ball bearings require per se a very slight power for transport, it is necessary to provide for correspondingly low friction of the rollers 13 on the shaft 12. This is attained by means of the brilliantly polished shaft 12 and a corresponding construction of the bearing faces as well as a corresponding fitting of the bore of the rollers 13 relative to the diameter of the shaft.

To compensate for the contraction of the film when the machine stops and to insure uniform film tension, one of the shafts, preferably the non-driven shaft 14, may be springy by consisting of an elastically flexible steel bar of corresponding thinness. In this way, the film tension is taken up by the elastic shaft and not by the film which is only slightly elastic.

It is possible, however, to drive the lower shaft 14 instead of the upper shaft 12. How in this case the film load is kept constant, illustrates Fig. 4 in which, as abscissa, the film load is entered in grams and, as ordinate, the tractive force, measured at the circumference of the roller, in grams. Curve 1 shows the tractive force developed at the driving rollers in dependence upon film load, and curve 2 shows the tractive force prevailing at the driven rollers in dependence upon film load. As indicated in the figure, the tractive force developing at the driving rollers increases with the film load to a higher degree than the tractive force at the driven rollers. The point of intersection of the two curves is assumed to coincide with the desired film load value, say, 70 grams. The arrangement according to the invention functions then as follows:

Assumed that at a given moment the film load is below the desired value, for instance at 50 grams. It will be seen that in this case the frictional force transmitted to the driving rollers is smaller than the friction appearing at the driven rollers and acting as braking force. The forces retaining the film are therefore greater than the forces pulling the film, that is, less film is con-

veyed than corresponds to the desired value and the film load must increase toward the end of the machine. The film load increases [illegible]re until the desired value of 70 grams has [illegible] reached. When the drawing and braking forces are equal at every point of the machine, the film is not loaded anywhere more than 70 grams. If the film load increases beyond the desired value of 70 g., it is evident that the friction of the driving rollers pulling the film is greater than that of the driven rollers, so that the driving rollers tend to convey more film than is drawn out by the last firmly driven roller at the end of the machine, in consequence whereof the film loops will be lengthened again and thereby decrease the film load until a state of equilibrium and thus the desired load value have been reached.

The frictional conditions prevailing between the driving and the driven rollers according to the invention permit therefore automatic regulation of the entire machine to a certain film load. The fluctuations in film load depend upon the angle α formed by the two curves. If this angle is small, the load will fluctuate within larger limits than at greater values of the angle α. When the film is moved by a means which brakes it through friction, a constant additional force arresting the film transport appears, which means that the curve 2 would extend parallel to itself and upwardly displaced. But even in this case the frictional conditions may be chosen so that the point of intersection of the two curves coincides with the desired film load value.

WALTER GEYER.

PUBLISHED

MAY 25, 1943.

BY A. P. C.

W. GEYER

FILM TREATING MACHINES

Filed April 10. 1940

Serial No.

328,859

2 Sheets-Sheet 1

Fig. 1

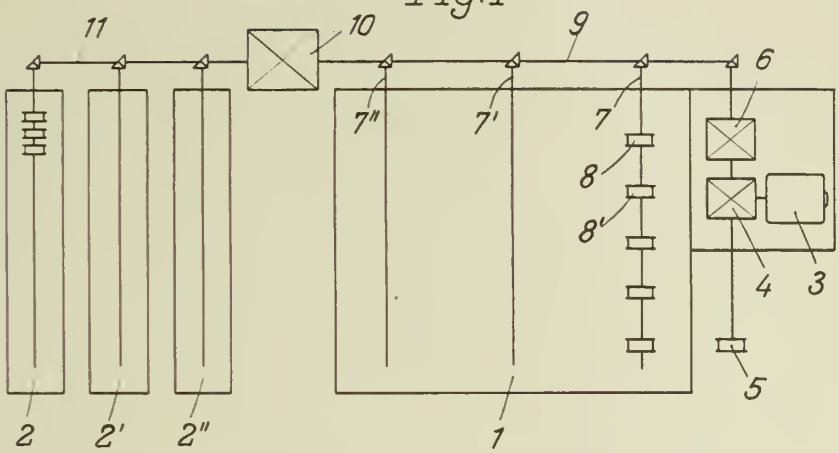

Fig. 2

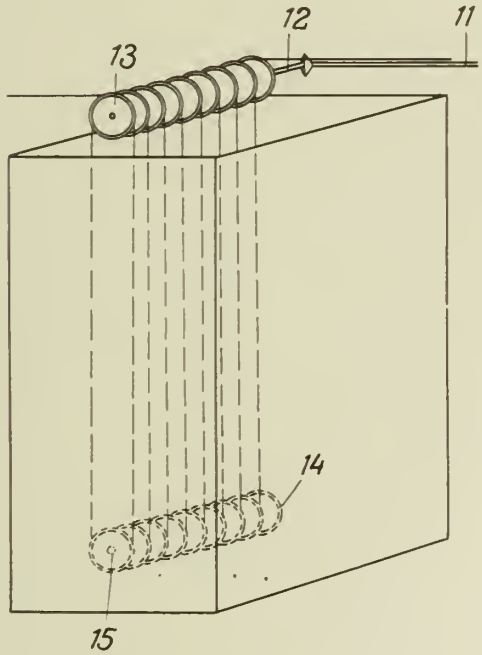

Fig. 3

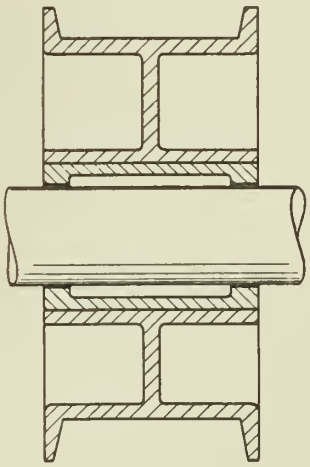

Inventor:
WALTER GEYER

BY Hammond & Littell

ATTORNEYS

PUBLISHED

MAY 25, 1943.

BY A. P. C.

W. GEYER

FILM TREATING MACHINES

Filed April 10, 1940

Serial No.

328,859

2 Sheets-Sheet 2

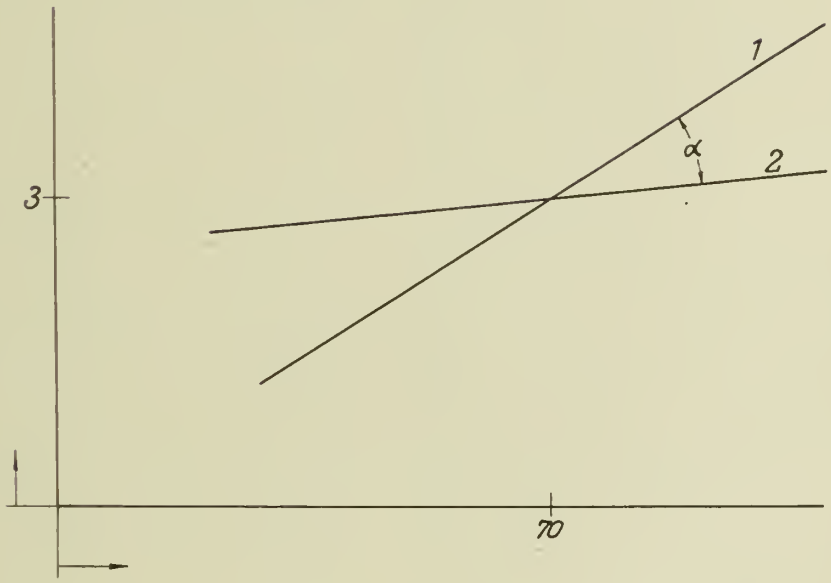

Fig. 4

Inventor:
WALTER GEYER

BY Hammond & Littell

ATTORNEYS

Published May 25, 1943

Serial No. 328,949

ALIEN PROPERTY CUSTODIAN

SINGLE ACTION HIGH SPEED MULTI-CYLINDER PUMPS

Auguste Adelin Gustave Magis, Paris, France; vested in the Alien Property Custodian

Application filed April 10, 1940

The present invention relates to single action high speed multi-cylinder alternating pumps for liquid and gaseous fluids.

The object of the present invention is to provide a pump of this kind which is better adapted to meet the requirements of practice than similar pumps used for the same purpose up to the present time.

According to an embodiment of the present invention, the pump includes a plurality of cylinders in each of which the fluid inlet ports are arranged in such manner as to be opened by the piston at the end of its admission stroke, and a valve forming the end wall of the cylinder and the diameter of which is equal or nearly equal to that of the cylinder controls the outflow of the fluid into an exhaust chamber common to all the cylinders or to a whole row of cylinders. This valve is so devised as to afford, for a relatively small lift thereof, a large section of flow, which reduces friction and gives a minimum loss of pressure. Furthermore, the valve in question is so devised and arranged as to reduce to a minimum or even to eliminate the piston clearance space.

According to another embodiment of the invention, the valve is of annular shape, the end wall of the cylinder being, in this case, made rigid with the cover of the exhaust chamber or with a fixed intermediate piece.

Preferably, a single crankshaft drives the whole of the pistons of the respective cylinders of the pump and said cylinders may constitute either a single row or a plurality of rows arranged in V-like or star-like fashion around the crankshaft.

Other features of the present invention will result from the following detailed description of some specific embodiments thereof.

Preferred embodiments of the present invention will be hereinafter described, with reference to the accompanying drawings, given merely by way of example, and in which:

Fig. 1 is a diagrammatic longitudinal sectional view of a pump made according to a first embodiment;

Fig. 2 shows one half of an end view of the pump, in section on the line II—II of Fig. 1;

Fig. 3 is a partial sectional view of a modification of the pump.

In the drawings, reference character 1 designates the pump body, including three cylinders 2, mounted in line so as to form a row. Each of these cylinders cooperates with a piston 3, and the three pistons are actuated by a crankshaft common to the three cylinders, with the interposition of connecting rods 5. The crankshaft is mounted in bearings provided in four supports 6 fixed to the pump body 1. As a matter of fact, these supports 6 may also be made rigid with the pump body. They can also be connected together by a small surrounding the bearings and the crankshaft, in such manner as to constitute a crankcase.

In the pump body 1, the inlet ports designated by reference character 8 open into a cavity 7 which constituted the tank of fluid to be pumped, for instance oil. Piston 3 opens these ports 8 when it comes to the end of its inlet stroke. Cavity 7 is constantly fed with oil through an aperture 9. In the case of an oil pump the crankshaft of which is located in a wholly closed crankcase, cavity 7 may be in communication with the inside of this crankcase, so that all the moving parts of the structure, such as the crankshaft, the connecting rods, the pistons, and also their joints and their bearings, are immersed in oil.

Above the row of cylinders 2, there is provided an exhaust chamber 10, common to the whole row of cylinders and into which said cylinders open directly.

Between this chamber and each cylinder, there is interposed a valve 11 which constitutes the whole of the end wall of the cylinder. This valve bears upon a seat 12. The lift of this valve is limited by an abutment 13 provided at the lower part of a plug 14. A stirrup-shaped part 15, engaged on the pump body 1 and 16 and provided with a pressure screw 17, keeps said plug 14 in position in a housing 18 provided in the upper wall of the exhaust chamber. This screw 17 makes it possible to apply this plug 14 against a shoulder 19, and the fluidtightness of the joint is insured through any suitable means either conventional or not.

Plug 14 is coaxial with cylinder 2. Its size is sufficient for permitting the insertion and removal of valve 11; and also of the corresponding piston 3.

The weight of valve 11 may be sufficient for bringing it back onto its seat after the outflow of oil or any other fluid from the cylinder. However, a spring may be interposed between valve 11 and abutment 13. For instance, this spring may be a spiral spring housed in a corresponding recess provided in abutment 13 and plug 14. The use of a return device such as a spring may in particular be contemplated when, as a consequence of its position or of other local circum-

stances, the valve has a tendency not to come back onto its seat as exactly and quickly as it may be desirable.

The fluid driven by the pistons into the exhaust chamber 10 escaped from said chamber through a pipe 20, adapted to lead it to the place where it is to be employed.

The lateral walls of the exhaust chamber may, as illustrated by the drawing, be made integral with the pump body 1, but this arrangement is not necessary.

Owing to the features which have just been described, the pump includes a very limited number of mechanical parts in movement. During the inlet stroke of each piston, there is formed, between said piston and the corresponding valve a vacuum which, however, is not complete, due to unavoidable leakage, and which, as soon as ports 8 are uncovered by the piston, produces an inflow of the fluid to be pumped into the cylinder, at a very high speed. The length of the connecting rods may be such that the working face of each piston comes as near as it is desired to the position of rest of the under face of the corresponding valve. The upper position of said working face may even be caused to coincide with this position, which practically eliminated the clearance space.

As the valves are of a diameter as large as possible, a very small lifting movement thereof is sufficient for affording a very large section of flow for the escaping fluid, whereby the exhaust takes with minimum friction and practically without loss of pressure.

For all these reasons, the pump according to my invention is especially well adapted to work at high speed and under high pressure, with a very satisfactory efficiency.

In the modification illustrated by Fig. 3, valve 21 is given the shape of an annulus of relatively small width. The seat of this valve is constituted by a conical surface 12 provided in the pump body as in the embodiment just above described and by another conical surface 22 provided in a head 23 fixed by means of a screw 24 coaxially with the plug which closes the exhaust chamber 10, in such manner that it is possible to arrange valve 21 between head 23 and plug 24 before their assembly.

Fluidtight contact between plug 25 and the pump body 1 is ensured through any suitable means. The assembly of head 23 and plug 25 is preferably effected in such manner as to permit of adjusting the height of said head by modification of the position thereof with respect to the plug.

Plug 25 is provided with an annular abutment 26 which limits the lifting movement of the valve, said abutment being provided with apertures 27 which permit free circulation of the fluid through the exhaust chamber 10.

In the preceding description, it has been supposed, by way of example, that the pump is an oil pump, but the invention can be applied to all fluids, both gaseous and liquid. It goes without saying that, in the case of a compressible fluid, the vacuum that is formed in the cylinders during the admission stroke is not so complete as in the case of a fluid which is not compressible, since any amount of this fluid as may remain in a cylinder after the closing of the valve then expands as the piston is moving away from said valve.

When the fluid to be compressed becomes heated, it suffices to apply cooling means of any suitable type.

Of course, the above described examples have no limitative character and apparatus can be devised which differ from these embodiments while remaining within the scope of the invention.

In particular, a single crankshaft can be used for driving the pistons of several cylinders distributed into a plurality of rows arranged in V-like or star-like fashion about the axis of said crankshaft. Such an arrangement is particularly well adapted to a good balancing of the stresses and of the moments of the moving masses.

On the other hand, it should be noted that the valves shown by the drawings are not provided with special guiding means. As a matter of fact, experience has taught that valves arranged in this manner work perfectly well without the addition of such means. However, this does not exclude the possibility of guiding the valves through any suitable means, when necessary.

AUGUSTE ADELIN GUSTAVE MAGIS.

PUBLISHED A. A. G. MAGIS Serial No.

MAY 25, 1943. SINGLE ACTION HIGH SPEED MULTI-CYLINDER PUMPS 328,949

BY A. P. C. Filed April 10, 1940

FIG 1

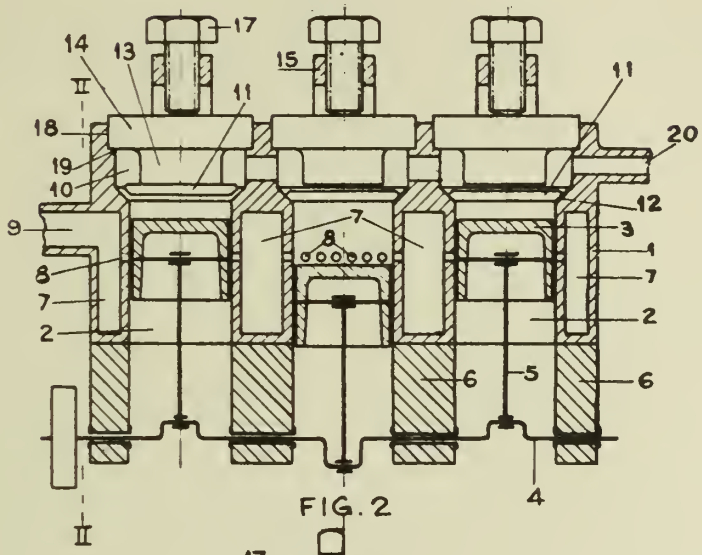

FIG. 2

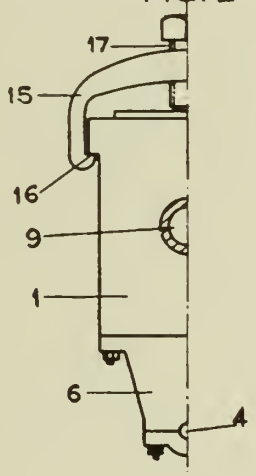

FIG. 3

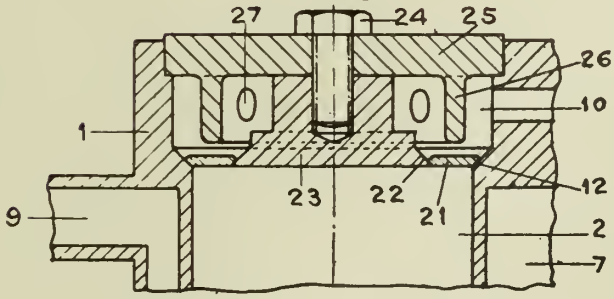

Inventor
A. A. G. Magis
By
Watson, Cole, Grindle & Watson
Attorneys.

Published May 25, 1943

Serial No. 329,945

ALIEN PROPERTY CUSTODIAN

CONNECTION FOR BORING TUBES

Jakob Keulers, Hilden, Germany; vested in the Alien Property Custodian

Application filed April 16, 1940

At deep boring, for instance for petrol, the bore holes attain ever greater depths. It has been ascertained that the tubes used for lining the bore holes no longer possess at the joints the solidity necessary for the continually increasing depths. The tubes are connected by screwing. The screw threads therefore are standardized, and preferably with flank angle from 55–60° and with 8–10 threads per inch. Such a screw thread possesses the advantage that, when two tube ends are screwed together, a tight connection is produced. This screw thread possesses, however, also certain inconveniences, which become effective particularly when the tubes are used for very deep bore holes. One of these inconveniences is, for instance, that when the tubes are retracted from the bore hole to be employed at another point, it is difficult to disconnect the tubes and to screw them together again. In most instances the screw threads are damaged or destroyed by so-called seizing, whereby the screw thread becomes useless, so that it is necessary to either repair the screw thread or to cut off the screw threaded end of the tube and to cut new screw threads.

One of the chief inconveniences of the screw thread described is, however, that the solidity of the connection is not great enough and it amounts in most instances not to above 50% of the solidity of the tube based on the quality numerals of the tube material.

Attempts have been made to obviate this inconvenience by departing from the prescribed screw thread profile and using a trapezoidal profile. This screw thread permits of repeated screwing of the connections without any serious danger of damaging of the screw thread by seizing. Also the solidity of the connection is substantially higher than otherwise. Such a screw thread has, however, the inconvenience that it does not ensure a tight connection so that it is necessary to use an additional packing consisting mostly of two conical faces which are tightly pressed the one against the other when the connection is screwed home. It is further necessary to avoid, that the connection is screwed beyond a certain limit of screwing up in order that the tube ends are not stressed beyond their stretching limit. This is attained in that the end face of the tube end having internal screw thread bears against a thickening of the tube end with external screw thread.

These conditions are usually fulfilled in that the tube ends are thickened by upsetting, the thickening amounting for instance to double the wall thickness of the tube, and the length of the thickening being approximately double the screw-threaded length. This thickening of the tube ends requires a considerable surplus of work and is connected with high expenses. The quality of the material structure is further impaired by the upsetting work, so that the material in the thickened ends does no longer possess the same good quality properties as those in the smooth portion of the tube. The thickening of the tube ends further has the inconvenience that repairing on the bore fields is not possible in case the repairing makes it necessary to cut off the tube end, because the repair shops on the bore fields are not equipped with installations for upsetting the tube ends.

The object of the invention is to produce a connection for boring tubes with a widened tube end having trapezoidal or similar screw threads and two packing faces which effect packing of the tube ends, when they are being screwed together, and a bearing face on the tube end with external screw thread against which face the end of the coupling box bears tightly at the screwing together, no thickening of the tube ends being necessary.

In the only figure of the accompanying drawing the connection of boring tubes according to the invention is illustrated.

The two tubes to be connected the one with the other are designated by *a* and *b*. c designates the screw thread on the ends of the two tubes, said screw thread being of trapezoidal or similar cross-section. The end of tube *a* is widened and the end of tube *b* screwed-in so that the inner diameter of both tubes remains the same on the whole length. The widening of the tube end *a* is carried out corresponding to the conicity of the screw thread and to the packing face, so that the reduction of the wall thickness of tube *a* at the cutting of the screw thread and at the working of the packing face is not more than corresponds to the depth of the screw thread. The same is valid for the tube end *b* which is also calibrated according to the conicity of the screw thread. The thickening of the tube end *b* to produce the bearing face *d* is effected by fitting on a ring *e*. This ring can either be welded on or fixed on tube *b* in any other suitable manner. The two packing faces *f* are preferably of different conicity than the screw threads *c*. A slit *g* is provided in the end face of the end of tube *b* so that a lip-shaped extension *h* is produced which permits of elastic yielding of the packing face at the screwing together

of the connection. This yielding of the tube end is desirable in order that in any case screwing together of the tube ends is possible to such an extent that the end face of the widened portion of tube *a* bears against face *d* of the thickening ring *e* even if, owing to inaccuracy at the production, a tube with greater conical surface *f* is screwed at the end to be inserted into a tube with smaller conical surface *f* at the end facing the coupling box. The bearing face *d* can be produced, instead by the ring *e*, in any other suitable manner, for instance by providing a bead which is produced from the wall of tube *b*.

JAKOB KEULERS.

PUBLISHED

MAY 25, 1943.

BY A. P. C.

J. KEŬLERS

CONNECTION FOR BORING TUBES

Filed April 16, 1940

Serial No.
329,945

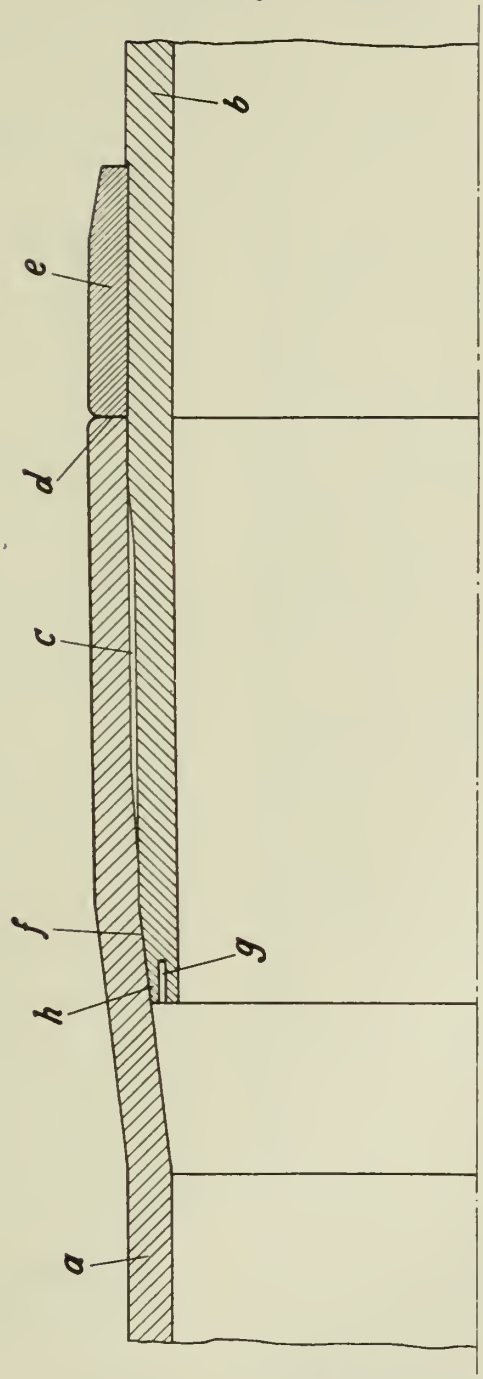

Inventor:
J. Keulers

By: Glascock Downing & Seebold
Attys.

Published May 25, 1943

Serial No. 330,007

ALIEN PROPERTY CUSTODIAN

LANDING GEARS WITH DIRIGIBLE LANDING WHEEL

Pierre Ernest Mercier, Neuilly sur Seine, France; vested in the Alien Property Custodian

Application filed April 17, 1940

This invention relates to improvements in landing gears with dirigible landing wheel.

There are recognised peculiar advantages to landing gears with dirigible landing wheel, and particularly to those of the three wheeled kind. Now the direction control of the governor wheel is of interest for evolutions on ground, but it needs, for mean and heavy load aeroplanes, the use of a servo-motor.

It is known to use compressed air or a fluid under pressure to feed such servo-motors. The power source is then located into the structure of the aeroplane and it is re-charged, or drawn by energy collected on the motors.

In order to simplify the corresponding installations and to avoid failures due, notably, to the consumption of compressed air at the instants where the wheel direction control is to be used, particularly when landing, it is advantageous to collect on the wheel itself the energy necessary for diriging it.

This is the principle of the present invention.

It is clear that the said invention may admit numerous modifications. For example, one may think that the power is collected from the rotation of the wheel by means of gears, one of which is drawn by the wheel, or through cylinders rolling on the tyre of the said wheel.

The energy thus collected my be used as mechanical energy, or in any other form.

Amongst all those modifications, there will be hereafter described an example corresponding to the case of an hydraulic servo-motor.

This servo-motor is provided with a power source, consisting of an hydraulic pump, drawn through a cylinder rolling on the tyre, and two cylinder receivers exerting antagonist forces on the direction of the wheel.

Besides, the mechanism comprises a distributing head, with automatic pressure limitation, remote controlled by the pilot and a feeding tank for the pump.

Further, the said mechanism is provided with means for damping the so called "shimmy" oscillations which often appear on dirigible wheels.

The invention is illustrated by means of the appended drawings in which:

Figure 1 shows in lateral elevation a dirigible single landing wheel according to the invention, together with part of its movable frame;

Figures 2 and 3 are horizontal sections, respectively along lines AB and CD of Figure 1;

Figure 4 is a schematic drawing of the hydraulic circuits and parts of the direction control system;

Figure 5 is a cross section of a double dirigible landing wheel according to the invention, with its supporting frame;

Figures 6 and 7 are respectively a side view and a horizontal view corresponding to Figure 5;

Figures 8, 9, 10 and 11 are sections at an enlarged scale of some parts of Figure 5;

Figures 12, 13 and 14 relate to an entirely mechanical solution of the problem of which an example of hydraulic solution is given with reference to the preceding figures.

Referring to Figure 1 and to its subordinate Figures 2 and 3, wheel **1** is carried by a fork **2**, the shaft of which is numbered **3**. This shaft is guided in the body of the dash-pot **4** serving as a wheel carrier. The wheel and its accessories being elements of a collapsible landing gear, there has been shown at **5** the collapsing frame of part **4**.

The cylinders of the direction servo-motor are numbered **6**, **6** on Figures 1 and 2.

There is shown on Figure 2 a gear wheel **7**, rotating with shaft **3**, owing to the intermediary of a grooved box, located in part **4** and not shown of Figure 1.

A lever **8** is fixed on a toothed sector **10** gearing with part **7**.

Lever **8** is acted upon by rods **9**, connected to the operating pistons of the cylinders **6**.

The hydraulic pump is mounted in the inside of roller **12** carried by arm **11**, pivoted at **13** on fork **2**.

The feeding liquid tank **14** for the pump is carried on the fork by means of arms **15**.

On Figure 4 are again shown the cylinders **6** in which move pistons **20** which drive lever **8** through rods **9**. Springs, not shown, produce the pulling back in the axis at the instant of the collapsing of the wheel.

The pipe system **21** for the feeding of cylinders **6** end on a four way cock **22**, the inner box of which is numbered **23**.

In its symmetrical position, as shown on Figure 4, the said box establishes a communication between pump **24** (located in roller **12**) on the one part, cylinders **6** and a weighted valve **25**, on the other part, with return to tank **26**.

Further, with pipes **21** are connected two symmetrical branches **27**, leading to two valves with variable biasing tension, by means of roller push rods **28** and of cam disc **29**.

Cam disc **29** and box **23** are coaxially mounted and remotely controlled by the pilot.

The working is as follows:

When the aeroplane is driven along a straight

course, box 23 and cam disc 29 are in the symmetrical positions shown on Figure 4.

The pump then delivers liquid through valve 25 into tank 26.

The adjustment of the valve is so provided that the pressure of the piston rings 20 ensures a correct damping of the "shimmy" oscillations. It is possible, if necessary, to adjoin to such damping means a suitable choking of pipe sections 30. By this means, cylinders 20 are, moreover, maintained constantly full of liquid.

When the pilot wants to turn, he causes the simultaneous rotation of box 23 and of cam 29. The liquid issuing from the pump is then admitted only in one or the other of cylinders 6 and the pressure of the liquid on the piston of the corresponding cylinder is adjusted by means of the variable tension of the homologous push rod 28.

On the other side, the cam form being suitably designed, the other push rod frees the opposed valve and the second cylinder empties into the tank under the action of the lever.

In this manner, the force applied to the wheel is, as desired, a function only of the position of the controlling parts and it cannot exceed the intended values, which ensures the elimination of the risk of capsizing on the ground.

The above described embodiments of the invention were more particularly related to the case of a single dirigible landing wheel. There will now be described some more embodiments relating to the case where there is used a double dirigible wheel.

This case is of a special interest, because it allows for a better repartition of the load on the ground. Moreover, if both wheels are bound together in rotation, the damping of the "shimmy" oscillations is automatically ensured by such coupling.

At last, the location of the steering swivel carrier part between the two wheels allows for disposing the braking and steering parts in an air tight casing, insulated from the tyres.

In order to benefit of the whole advantages of such a situation, the invention provides for the use of disk brakes, the movable disks of which are ventilated by means of air intakes through the axle inner bore, the refrigerating air of the brake disks being evacuated at the periphery of said disks, through suitable opening in the casing and being accelerated during rolling, by means of movable bladings carried by the said disks.

In order to secure a better refrigeration of the disks themselves, it is recommended to provide, in their width, air circulation channels and, therefore, the said disks may be of a mixed construction, with a central flange of light metal.

At last, the direction control may be obtained by means of an hydraulic pump (driven by the wheel) and of cylinders and pistons acting on a director cam, but it is also possible, on smaller dimensioned apparatus, to use an entirely mechanical control, as shown further, by once more using the rotational energy of the wheel in order to develop the directional forces.

On Figure 5, under reference numbers 1 and 2 are designated the twin tyres, the wheels 3 and 4 of which are keyed on the same shaft 5.

Shaft 5 is carried by the swivel carrier part 6 which comprises bearings 7 and 8.

On Figure 6 there is shown the swivel 9, fixed to part 6 and movable in the hollow part 10, on which are visible at 11 (11 and 12 on Figure 7) the direction control oil cylinders.

Figure 8 is a vertical section through part 6, along the plane of a transmission chain 13, which transmits to toothed wheel 14 the wheel movement. This toothed wheel 14 acts on the hydraulic pump feeding the cylinders 11 and 12.

Figure 9 is a section on a larger scale, along the plane of Figure 5. On this figure are visible the movable brake discs such as 15 and the fixed ones such as 16. An expansible chamber 17 allows for the actuation of the braking by means of a fluid under pressure.

Fluid tight systems (not shown) located at 18 and 19 allow to avoid the leaking of oil or grease from the bearings towards the disks.

The hubs of the wheels comprise air in take flanges 20, shown laterally on Figure 10 through which the air is introduced into hollow shaft 5, which is provided with channels, such as 21, in order to ensure the disk ventilation.

On Figure 11 are shown channels, such as 22, which are provided in the movable disks.

Openings such as 23 allow for the refrigerating air getting out of casing 6, after its passing through the disks.

Figure 12 shows an example of directional control by entirely mechanical means. Power is collected by chains 24 and 25 on shaft 5, schematically drawn and in superposed horizontal views on Figure 14.

Chains 24 and 25 act on toothed wheels keyed on tangential screws shown by their ends at 26 and 27 on Figure 12.

These screws drive the toothed discs 28 and 29, respectively fixed on the hollow shafts 30 and 31, which carry the brake pulleys 32 and 33.

This is completed by band brakes 34 and 35 shown in horizontally superposed views on Figure 13.

The remote control by the pilot of the band brakes may be assumed by small screw jacks such as 36 and 37 on Figures 12 and 13.

A back pulling in the axis by a simple spring is schematically indicated at 38.

The direction angles of the movable gear with reference to supporting part 10 may be limited by suitable stops.

The invention will of course allow for numerous modifications according to the dimensions, forms and materials of the various parts, assuming the respective functions of the whole device which forms its object.

PIERRE ERNEST MERCIER.

PUBLISHED

MAY 25, 1943.

BY A. P. C.

P. E. MERCIER

LANDING GEARS WITH DIRIGIBLE LANDING WHEEL

Filed April 17, 1940

Serial No. 330,007

5 Sheets-Sheet 1

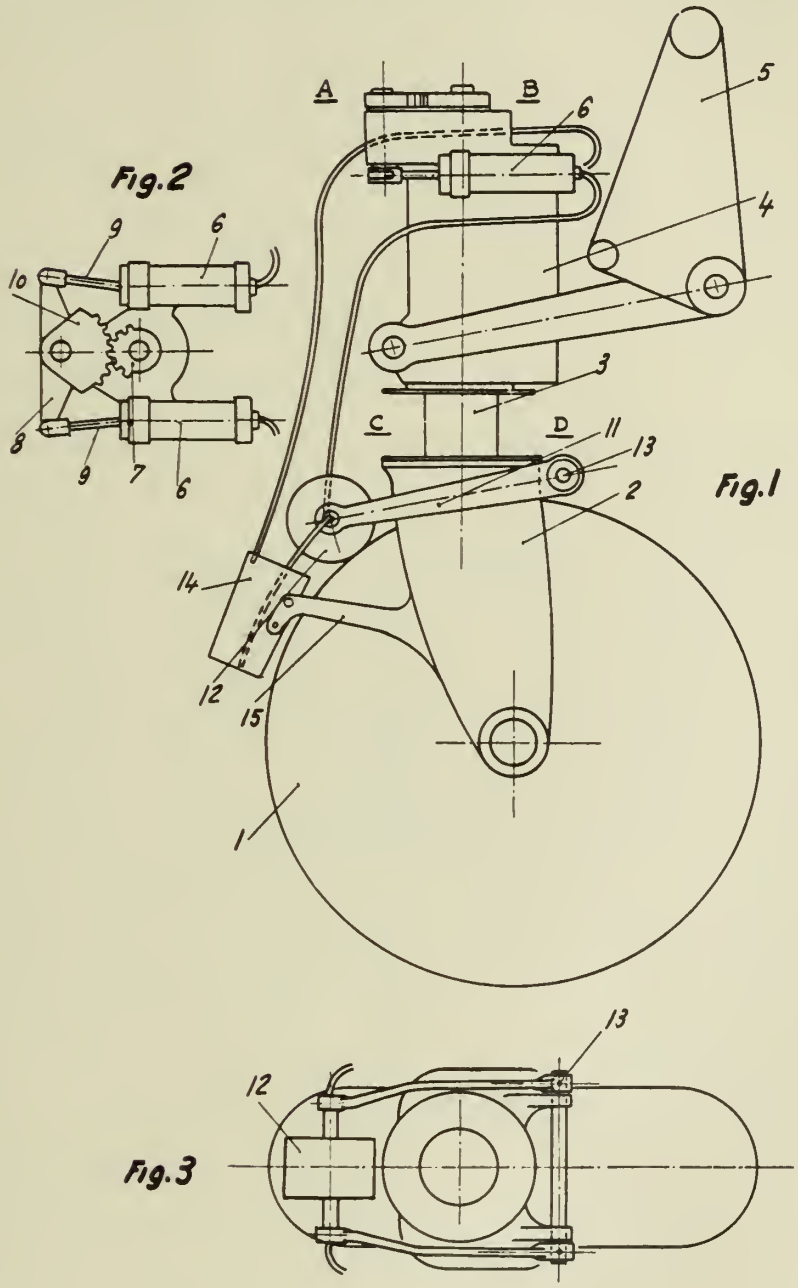

INVENTOR:
PIERRE ERNEST MERCIER
BY Haseltine, Lake & Co
ATTORNEYS

PUBLISHED

MAY 25, 1943.

BY A. P. C.

P. E. MERCIER

LANDING GEARS WITH DIRIGIBLE LANDING WHEEL

Filed April 17, 1940

Serial No. 330,007

5 Sheets-Sheet 2

Fig. 4

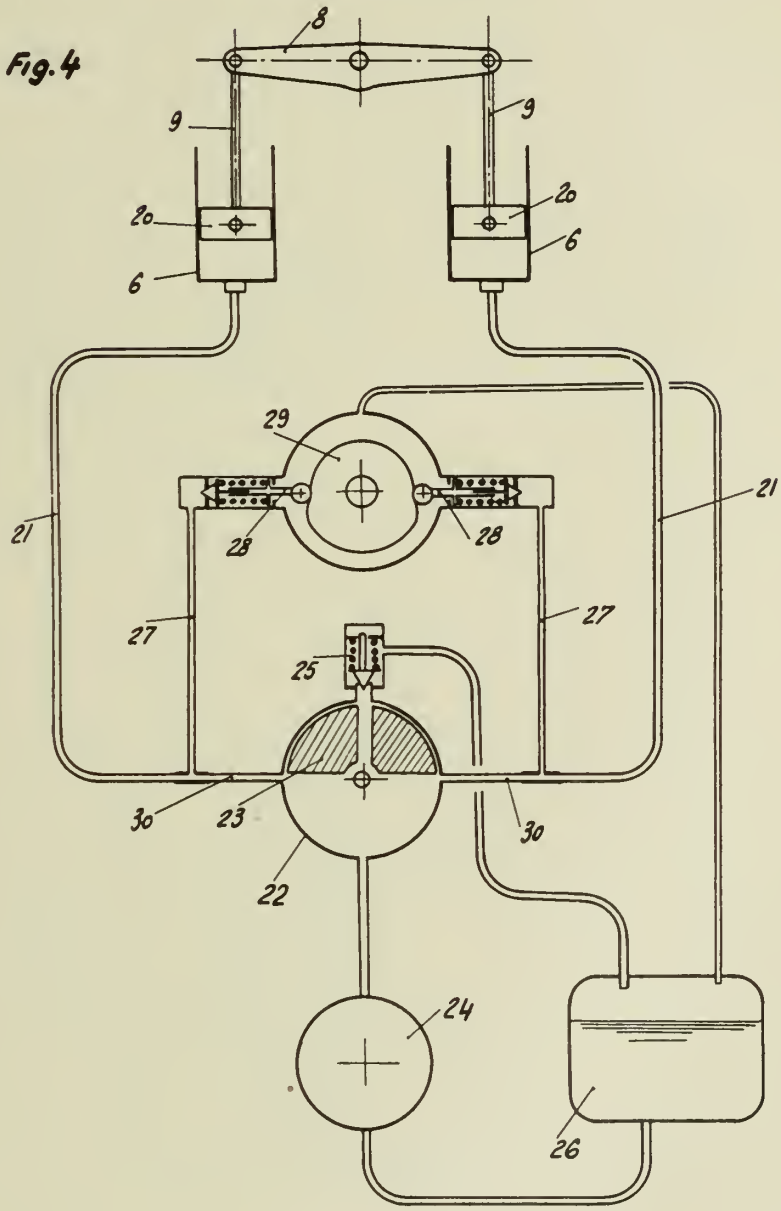

INVENTOR:
PIERRE ERNEST MERCIER
BY Hasseltine, Lake & Co
ATTORNEYS

PUBLISHED MAY 25, 1943. BY A. P. C.

P. E. MERCIER

LANDING GEARS WITH DIRIGIBLE LANDING WHEEL

Filed April 17, 1940

Serial No. 330,007

5 Sheets-Sheet 3

Fig. 6

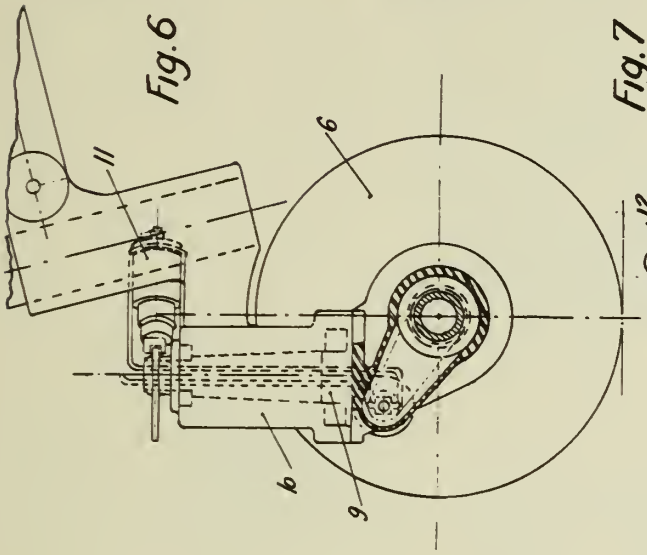

Fig. 7

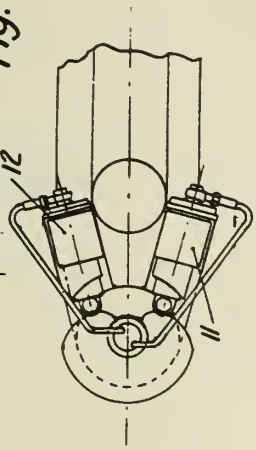

Fig. 5

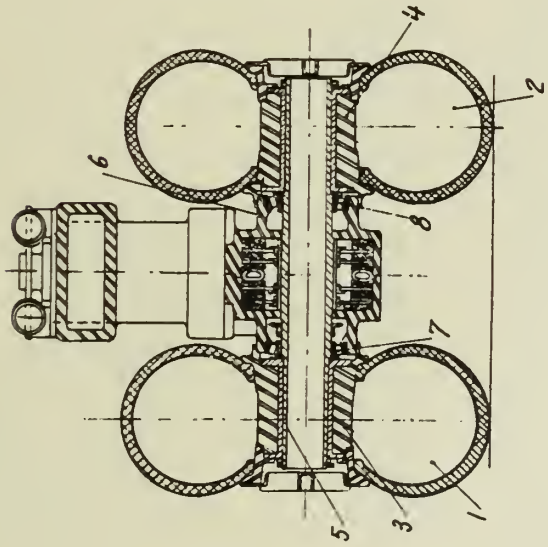

INVENTOR:
PIERRE ERNEST MERCIER
BY: Haseltine, Lake & Co
ATTORNEYS

PUBLISHED P. E. MERCIER Serial No.

MAY 25, 1943. LANDING GEARS WITH DIRIGIBLE LANDING WHEEL 330,007

BY A. P. C Filed April 17, 1940 5 Sheets-Sheet 4

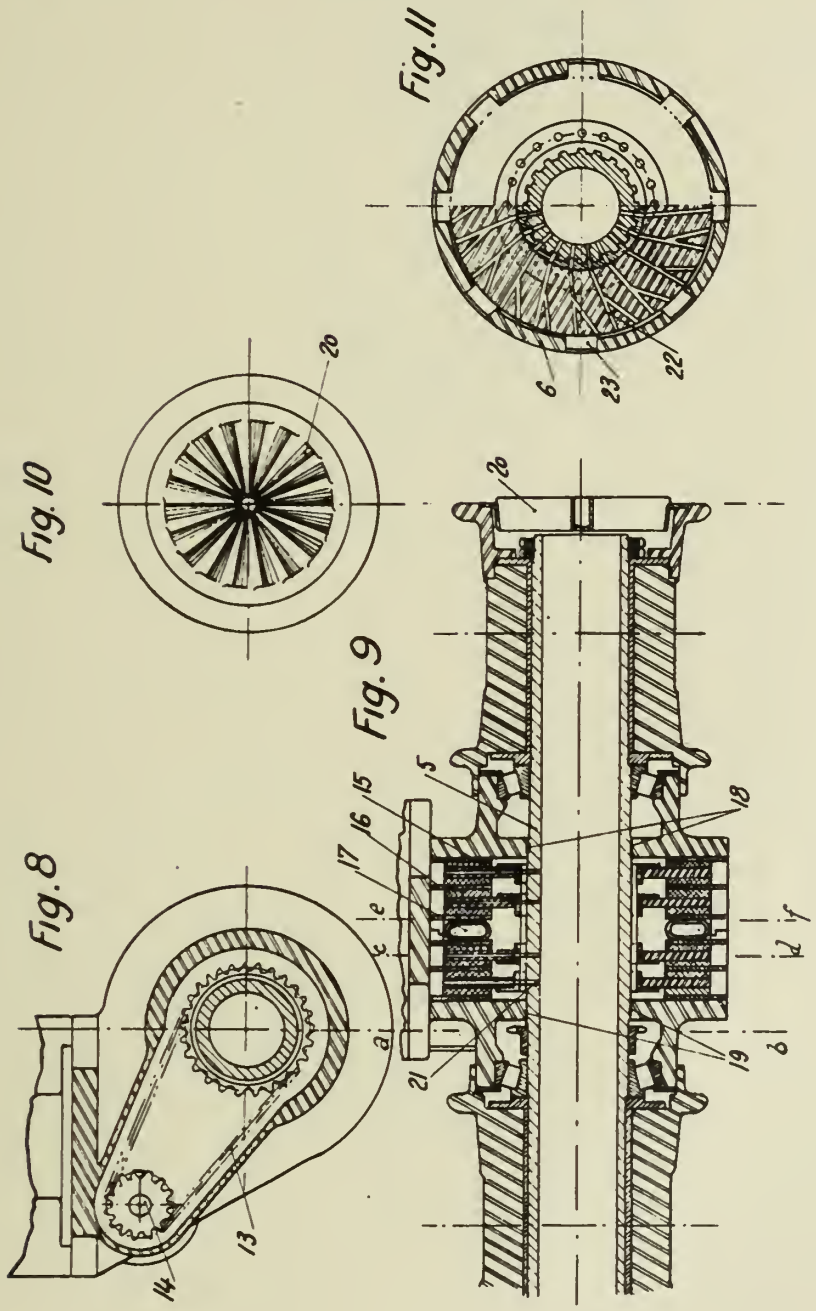

INVENTOR:
PIERRE ERNEST MERCIER
BY: Ô'Laselline, Lake & Co
ATTORNEYS

PUBLISHED

MAY 25, 1943.

BY A. P. C.

P. E. MERCIER

LANDING GEARS WITH DIRIGIBLE LANDING WHEEL

Filed April 17, 1940

Serial No. 330,007

5 Sheets-Sheet 5

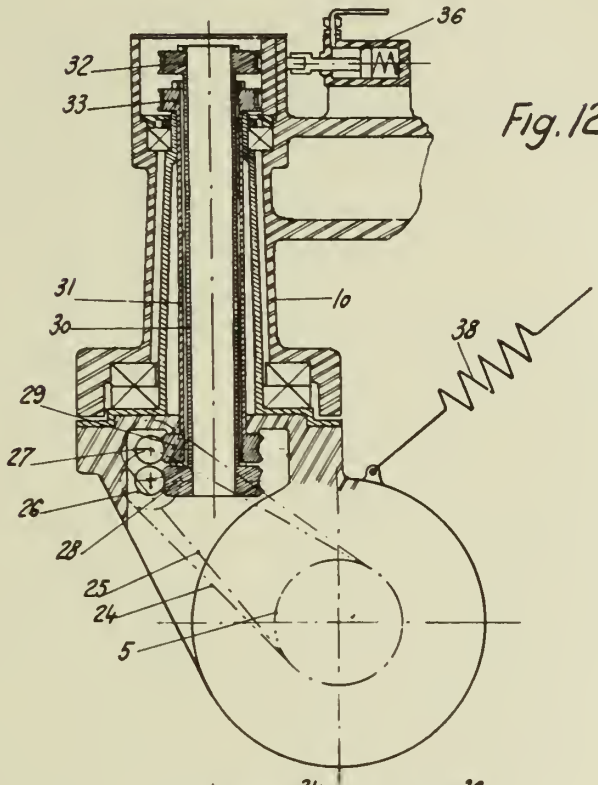

Fig. 12

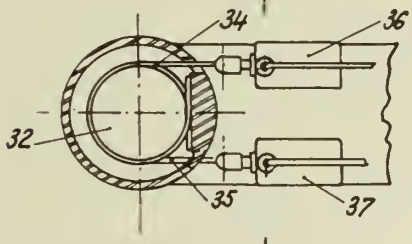

Fig. 13

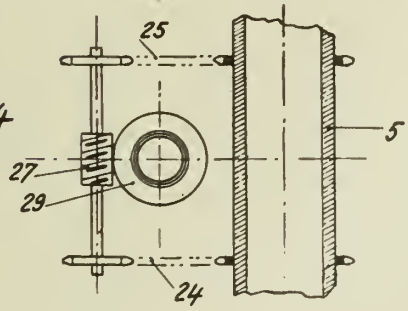

Fig. 14

INVENTOR:
PIERRE ERNEST MERCIER
BY Haseltine, Lake & Co.
ATTORNEYS

Published May 25, 1943

Serial No. 330,197

ALIEN PROPERTY CUSTODIAN

VALVES OR OBTURATING DEVICES FOR FLUID PIPES AND CONTAINERS UNDER HIGH PRESSURE, PARTICULARLY FIRE EXTINGUISHERS AND THE LIKE

Valentin Remus, Brussels, Belgium; vested in the Alien Property Custodian

Application filed April 17, 1940

The invention relates to obturating means for fluid pipes and containers under high pressure, and particularly concerns the obturating devices used in connection with such pipes and containers in which an obturating valve opens against the pressure of the fluid.

In obturating devices of this kind, serious difficulties are encountered to ensure the tightness of the valve due, amongst other things, to the fact that the generally soft packing materials, normally used, are liable to deteriorate, such tendency being so much more marked that said materials are subjected to more severe temperature conditions, such as those due to the expansion of highly compressed fluids, or by reason of the climate as in hot countries, or for other reasons, such for example as a chemical action due to the fluid himself.

On the other hand, owing generally to the same reasons, during the discharge of the fluid, fluid losses through the valve operating device are unavoidable, and the same is true also during the loading of the pipes or containers with fluid under pressure, when, as in most of the cases, such loading is effected by causing the fluid to flow through the obturating device.

Also, it is of importance to ensure the perfect tightness of the obturating and valves devices in fluid containers under high pressure, not only under all the conditions to which these containers may be subjected in service, but also during transportation of such containers. While, generally, the levers, cams and like operating members associated to the obturating valves for actuating the latter are locked during transportation, such a locking, which is ensured through more or less strong bonding members, seals, lead seals, and similar devices, is in fact relatively safe only and does not positively prevent external accidental action on the valves and the unseasonable operation of the latter.

Moreover the containers with their levers, cams or other operating members mounted thereon are not only more bulky but, to avoid damages to these members, they require to be handled with great care, and this is not always the case during transportation.

Therefore, serious advantages would be gained if the levers, cams and other operating means of the valves or obturating devices could be separated from them during transportation of the containers equipped therewith.

Owing to crowding and possible injures to which may be subjected not only the levers, cams and the like, but also the valves themselves, as by striking of the valves on their seats during transportation of separate obturating or valves devices, as for example those intended to be mounted on pipes, it is of interest to separate these members from the obturating or valves devices or to be able to clamp them on their seats for transportation purposes.

The main object of the invention is to remedy these drawbacks, and to provide an obturating or valve device the tightness of which may be ensured under all conditions, that is as well in the state of complete or partial load of the associated pipe or container, as during the loading of said pipe or container with fluid under pressure or the discharge of said fluid and this whatever may be either the climatic or other conditions to which the obturating or valve device may be subjected, or the nature of the fluid.

Also the invention aims to ensure the tightness during the loading operation, in principle in an automatic manner.

Another object of the invention is to provide obturating or valves devices so arranged that injures to their parts will be avoided during transportation.

The invention consists, while providing the obturating device with valve packing members made of durable and unalterable materials such as metals and metal alloys, fibre, ebonite synthetic resins and materials behaving similarly, as synthetic rubber and the like, hereafter designated as materials of the kind specified, which are generally hard and deprived from the required softness to form easily tight joints, to provide means adapted to block mechanically a main valve on its seat, said means comprising an operating lever or an equivalent member which by cooperation with either a clamping member associated with the valves, or a stop or other locking member, provides a firm fulcrum for the member blocking the main valve on its seat.

The invention also consists in forming the fulcrum as a resilient member, the resiliency of the fulcrum cooperating to the blocking of the said main valve on its seat.

The invention also consists, in order to improve the isolation or separation of the passage through which the fluid is caused to flow as well during the loading operation as during the discharge of the fluid, to provide in combination an auxiliary valve as well as devices for mechanically blocking, eventually with the aid of resilient means, this auxiliary valve on its seat.

With advantage, the said main and auxiliary valves are arranged so that the action of the

fluid will be different on each of them, and preferably of lower value on the auxiliary valve than on the main valve.

Also the invention consists in arranging the lever, cam or the like through which the valve or valves is or are operated so that it may be easily separated, and in providing devices adapted to enable, without the aid of the said operating lever, cam or the like, at least one of the valves closing the pipe or container to be blocked on its seat. According to the invention, the expression operating lever, cam or the like means operating devices for valves or valve obturating devices providing for, at least, the axial displacement of said valves.

The invention also consists in associating with a valve closing the container or pipe, hereafter referred to as the main valve, and adapted to be blocked on its seat, a second valve adapted to isolate or separate the passage for the fluid from the operating device as well during the loading operation as during the discharge of the fluid, and which is preferably arranged to be blocked on its seat by the operation of the device blocking on its seat the first named valve.

Further, together with the valves named may be associated either a valve which is also adapted to close the container or pipe, or a structure comprising a diaphragm and a percutting member and adapted to answer the same purpose.

And in order to enable the manner in which the aforesaid arrangements may be practically devised, there will now be described with more detail, certain preferred embodiments given by way of examples and more or less diagrammatically illustrated in the annexed drawings, in which:

Fig. 1 is a part sectional side elevation view of a first embodiment;

Fig. 2 is a part cross sectional view, taken along the line 2—2 of Fig. 1;

Fig. 3 is a part cross sectional view, similar to Fig. 2, of an alternative construction;

Fig. 4 is a part sectional side elevation view of another embodiment;

Fig. 5 shows a detail of the embodiment according to Fig. 4;

Fig. 6 shows, in a manner similar to Fig. 4. an alternative construction of the arrangement illustrated in said figure;

Fig. 7 is a part sectional view of another alternative;

Fig. 8 illustrates the application of the invention to devices comprising two closure valves;

Fig. 9 is a part axial sectional view of an alternative;

Fig. 10 is a part sectional side elevation view of an embodiment comprising a separable operating lever;

Figs. 11 and 12 show similarly two alternative constructions of the embodiment of Fig. 10;

Fig. 13 is a part sectional side elevation view of an embodiment in which the main and auxiliary valves may be blocked on their respective seats by means of the same operating device;

Figs. 14, 15 and 16 show, in a similar manner, alternative constructions of the arrangement according to Fig. 13;

Fig. 17 is a part sectional side elevation view of an embodiment including a controlled locking of the main valve;

Fig. 18 is a part sectional side elevation view of another alternative;

Fig. 19 illustrates in sectional elevation an embodiment in which the valves are operated by cam devices;

Fig. 20 is a part sectional view along 20—20 of Fig. 19, this section being taken at right angles to that of this figure;

Fig. 21 shows a part sectional view, similar to that of Fig. 19, of an alternative construction;

Fig. 22 is a part sectional side elevation view of another embodiment in which the valves are operated by means of a cam;

Fig. 23 is a sectional view along 23—23 of Fig. 22, and taken at right angles to the plane of this figure;

Fig. 24 is a part sectional side elevation view of another embodiment, showing the association of a main valve with a percuting member;

Fig. 25 shows an alternative arrangement.

Referring to Figs. 1 and 2, 1 designates the body of a valve device mounted on a container for fluid under high pressure, shown by part at 2, and intended to control the discharge of the fluid from this container through the nozzle 3 to which any suitable distributing pipe, not illustrated, may be connected.

In the valve body 1 is mounted a valve 4 resting on its seat 5, with an interposed packing made of a material of the kind specified, preferably a metal.

In the illustrated embodiment, this packing is formed with a ring of white or antifriction metal, or the like, 6, sets in an annular groove of the valve 4.

For actuation purposes, the valve 4 is connected, as by screwing, through the intermediary of an extension 7, with a sliding rod 8 passing through a guide member 9 secured as by screwing to the body 1.

Past this guide, the operating rod is screw threaded as seen at 10.

On the other hand, made integral with the rod 8 or connected therewith there is provided a disc 11 in which is formed a circular groove also receiving a packing made of a material of the kind specified, as a metallic packing, for example made of white or antifriction metal, 12, said disc being adapted to cooperate with a seat 13 integral with or inserted in the body 1, in such a way that when the rod 8–10 is lowered to move the valve 4 away from its seat, the said disc 11 presses through its packing 12 against the seat 13 and forms a seal with the latter.

Between the seats 5 and 13 is formed a passage 14 adapted to ensure communication between the interior of the container 2 and the nozzle 3 when the valve 4 is moved away from its seat.

Further, on the body 1 is mounted, through the intermediary of a pivotal connection 15, or the like, an operating lever 16, provided with a more or less elongated opening 17 through which passes the screw threaded portion 10 of the operating rod.

On this screw threaded portion, and below the lever 16, is mounted a stop 18 of which the upper surface has been shaped, and for example curved in order to cooperate with lateral shoulders 19 provided on opposite sides of the opening 17 as better seen in Fig. 2. On the screw threaded portion 10, but above the lever 16, is mounted a stop 20 having a shaped and preferably curved bottom surface 21, and which cooperates with the edges 22 of the opening 17, such edges having been shaped as a curved seat, the curvature of which corresponds approximately to that of the surface 21.

The arrangement is such that when the stop

20 is screwed up so as to ensure an intimate contact between the surface 21 and the edges 22, while tightening the lever 16 between the stops 20 and 18, owing to the screwing operation this lever takes the position illustrated in the figure, in which it presses firmly the valve 4 on its seat 5.

From this position of the lever, one may, by an action applied at the end 23 of the lever 16, move the valve 4 away from its seat and further cause the packing 12 of the disc 11 to contact with the seat 13, thus isolating or separating the passage for the fluid flowing from the container 2 towards the nozzle 3. This operation is assisted by the provision on the body 1 of a handle 24, which may be grasped by the operator simultaneously with the lever 16—23, and which, in the case of fire extinguishers, also enables the apparatus to be directed towards the fire and this by the hand operating the said lever.

The intimate engagement of the packing 12 with the seat 13 may further be ensured by giving to the valve 4 an useful working surface greater than that of the auxiliary valve 11, so that when the valve 4 has been moved away from its seat, the fluid under pressure will exert a more considerable action on this valve than on the auxiliary valve.

In the foregoing only the fluid discharge from the container 2 has been considered.

When the container is again to be loaded with compressed fluid, a communication must be provided between it and the fluid source, and to this end, in most of the cases use is made of the nozzle 3 and passage 14.

When the aforesaid communication has been made, by depressing the lever 16 while at the same time applying firmly the disc 11 with its packing 12 against the seat 13, the compressed fluid also acts on the valve 4, and if a larger useful working surface has been given to this valve as compared with the auxiliary valve, this latter valve will be retained on its seat, even when releasing the lever 16—23 from the manual action thereon.

It has been found in practice that under these conditions the action of the fluid on the valve 4 will be sufficient to ensure a perfect tightness.

As the fluid passage between the container 2 and the nozzle 3 is isolated or separated as well during the loading operation as during the discharge of the fluid, no packing for the rod 8 will be necessary in the extend of its passage through the guide 9, and such passage through this guide may occur with a clearance sufficient to permit the operating rod to slide easily therein.

Owing to the use of valve packings of the kind specified, such as the metallic packings 6 and 12, no injure or damage is to be expected as well from a considerable lowering in temperature due to the expansion of the compressed fluid during the discharge as from high temperatures resulting from local climatic conditions, or for other reasons, as for example the vicinity of a fire, a chemical action of the fluid, or the like.

In the embodiment of Figure 3, the arrangement is similar to the one described with reference to the Figures 1 and 2, except that the stop 18 may slide freely along the portion 10 of the operating rod while it is pressed against the seat elements 19 by means of a strong spring 25 retained under desired compression by means of a disc member 26 screwed onto the screw threaded portion 10.

Owing to this spring, the actuation of the lever 16—23 is rendered more easy while the operation of the device is in other respects the same as that of the device according to Figures 1 and 2.

According to Fig. 4, the fulcrum taken on the lever 16 to secure the blocking of the valve 4 in the closed position of said valve is not obtained by imparting an appropriate shape to a portion of this lever, such as the edge 22 of its opening 17 as aforesaid, but either by means of a fulcrum or through the locking of this lever on or by means of an easily removable member.

In the illustrated embodiment, the said fulcrum is formed by means of a lock 27 pivoted on a pivot 28 of the handle 24 and engaging on the end 23 of the lever 16 by a notch 29.

When the lock 27 is thus engaged, it will be sufficient to engage somewhat more the stop 20 on the threaded portion 10 to cause the valve 4 to be firmly applied against its seat 5 and to prevent any possible escape of the fluid past this valve. On the other hand, for opening the valve 4, it will be sufficient to cause the lock 27 to be tilted outwardly in order to release the lever 16 and to enable the latter to be depressed as hereinafter explained.

When the discharge has been completed, the released lever 16 is returned in the upwards position by the action of the residual fluid on the valve 4, and then the lock 27 may again be engaged, the stop 20 being eventually screwed somewhat more to ensure the fluid tightness of the valve.

Instead of operating this stop, advantage may be taken from the resiliency of the lever 16, by arranging that in the raised position of this lever, the end thereof is located somewhat below the notch 29 as illustrated in Fig. 5.

Then, by exerting a pull from below upwards on the end of this lever, one may engage the end thereof in the notch 29 and thus firmly press at the same time the valve 4 on its seat.

Otherwise, the operations for re-loading the container or pipe to which the valve device is associated, are performed as described with reference to the Figures 1 and 2, the setting on its seat of the auxiliary valve 11—12 being eventually ensured by giving to this valve 11—12 a smaller useful working area than that of the valve 4.

However, as well during the loading as during the discharge of the fluid, an intimate and well tight contact of the auxiliary valve 11 on its seat 13 may be ensured in a permanent manner, by retaining the lever 16 in its depressed position by engagement of its end 23 in a notch 30 formed at a suitable location in the lock 27, and by raising somewhat, eventually, the stop 18 on the threaded portion 10 (Fig. 6).

The result of this is to press the packing 12 on the seat 13, and to remedy to any lack of tightness of the auxiliary valve should a fluid leakage occur thereon.

As in the locking action described with reference to the Figures 4 and 5, it can be arranged so that, when the lever 16 is depressed so as to merely ensure the contact of the packing 12 with the seat 13, the end 23 of the lever 16 is located somewhat above the notch 30, the further lowering of said lever and the engagement of said end in the said notch resulting in the firm application of the packing 12 on the seat 13, thus ensuring a perfect tightness of the auxiliary valve.

At the completion of the discharge or when reloading the pipe or container with compressed fluid, it will be sufficient to release the lock 27 by

tilting it outwardly in order to restore the lever 16 in its raised position, while eventually locking it again in this position by engaging the end 23 thereof in the notch 29.

As hereinbefore indicated, the auxiliary valve may be other than a disc member, and Fig. 7 illustrates one of the other possible embodiments.

In this figure, the rod 8 is reduced in diameter at 31 so as to provide a shoulder at 32, and on this reduced portion and in contact with the shoulder, a disc member 33 is secured in a fluidtight manner.

Between this disc member 33 and the end of a sleeve 34 screwed in the body 1, is mounted an undulated metallic cylinder 36, the flanged end portion of which is tightened between the said end of the sleeve 34 and a shoulder 35 on the body 1.

Under such conditions, when the lever 16 is depressed to move the valve 4 away from its seat, in order to secure the discharge of the fluid from the associated container or pipe, or to permit same to be re-loaded with fluid under pressure, the undulated cylinder prevents any leakage of the pressure fluid.

Instead of using an undulated cylinder 36, the diaphragm may be arranged as a simple disc member formed by means of a membrane or a set of superimposed membranes made of flexible material, the peripheral portion of which is pressed in a fluidtight manner between the body 1 and the bottom of the sleeve 34, while the edge of the central opening thereof is pressed in a fluidtight manner between a shoulder such as 32 and a disc plate such as 33.

Besides the described particular arrangements of the auxiliary valve, the construction in this figure is similar to the one set forth with reference to the Figs. 1 and 2.

Figure 8 shows the invention as applied to valve devices including two valves, the main valve 4 cooperating with a valve 37 also opening against the fluid pressure.

As will be seen on the figure, the assembly including the main valve 4, the auxiliary valve 11 and the operating rod 7—8—10, is mounted within a member 42 engaged in the body 1 and secured to the latter in any approved fluidtight manner, for example by screwing as illustrated. The member 42 includes a section of the discharge passage 14 which cooperates with another section of this passage formed in the body 1.

Otherwise, the body 1 includes the pivotal supporting bracket for the lever 16, and a seat 38 for the valve 37, the rod 39 of this latter valve being provided with a disc plate 40 and being mounted in line with the operating rod 7—8—10 for the valves 4 and 11.

The valve 37 may be either urged on its seat by means of a spring 41, or not so urged, and it includes a packing similar to those of the valves 4 and 11.

In operation, when the lever 16 is depressed to move the valve 4 away from its seat, this latter valve engages the disc plate 40 and moves the valve 37 downwardly away from its seat, the tightness being ensured during the discharge by the application on its seat of the valve 11.

When the lever 16 is returned in raised position, the valve 4 is raised and under the pressure of the fluid and, or the action of the spring 41, the valve 47 is also restored on its seat. The tightness is ensured by the two valves 37 and 4, and in any case by the blocking on its seat of the valve 4 in the manner already indicated in the foregoing.

Instead of the auxiliary valve 37 and the seat 38, a percuting member and a metallic diaphragm may be used, the metallic diaphragm then being pierced during the first opening operation of the valve 4 and necessarily remaining so, until it is replaced, that is during the subsequent opening operations, up to the complete emptying of the container 2.

Several partial discharges of the container remain nevertheless possible, as the closing of the container and the tightness of the closure may in any case be ensured through the valve 4.

In the described arrangement, it has been assumed that the part 10 of the operating rod is rigidly connected to the part 8 of this rod. In cases where the opening course has a substantial value, or even in normal cases, it may be of interest to avoid any slight rocking movement of the valves, which may be due to the action of the operating lever when the aforesaid parts 10 and 8 are rigidly connected together.

To this end, a certain freedom of movement, other than in axial direction, may be allowed to the part 10 relatively to the part 8, and this may be ensured by pivoting these parts together in any suitable manner, and for example by means of a spherical connection as illustrated in Fig. 9.

In this figure, the part 10 terminates in a ball member 10*a* engaged in a hollow 8*a* of the part 8, said ball being retained in position by means of a cover 10*b* screwed on the part 8 and which may also be used with advantage for guiding this part 8 in the smooth hole 1*a* of the body 1.

On the other hand, with reference to the described arrangements, it has been said that the tightness as well during the loading operation as during the discharge of the fluid, is ensured in a perfect manner by the valve arrangements set forth. However within the interval of the passage from the open position to the closed position, or vice-versa, a slight escape of fluid may occur should the movement not be executed very quickly, thus leaving the impression of a defect in tightness of the device.

To avoid this drawback, Fig. 9 shows that between the elements which are movable relatively to each other, as the part 8 and the body 1, a packing may be provided, formed by means of a washer or washers 8*b* made of a more or less soft metal, as for example lead, and which are either engaged on the part 8 or located within the body 1, these washers being preferably arranged between or separated by washers such as 8*c* made of a hard metal. A ring 8*d* secured as by screwing may further be provided for retaining the packing into place.

With reference to Fig. 10, 1 again designates the body of a valve device mounted on a container for fluid under high pressure, illustrated by part at 2, in order to control the discharge of the fluid from this container through the nozzle 3, to which any suitable distribution pipe, not shown, may be connected.

In the body 1 is mounted a valve 4 resting on a seat 5, with the interposition of a packing 6, preferably made of one of the materials of the kind specified.

For operating the valve 4, this valve is connected, as by screwing, through the intermediary of an extension 7, to a sliding rod passing through a guide member 9 screwed on the body 1.

Past said guide, the operating rod is screw threaded as seen at 10.

On the other hand, formed integral with, or mounted on the rod 8, is a disc member 11 provided with a circular hollow or groove also receiving a packing 12, preferably made of one of the materials of the kind specified, and adapted to cooperate with a seat 13 made integral with or mounted on the body 1, in such a way that when the rod 8—10 is lowered to move the valve 4 away from its seat, disc member 11 is applied, through its packing 12 on the seat 13 and forms a tight joint therewith.

Between the seats 5 and 13 is formed the passage 14, ensuring the necessary communication between the interior of the container 2 and the nozzle 3, when the valve 4 is moved away from its seat.

Further on the body 1 is mounted, in an easily separable manner, and preferably through the intermediary of a pin 15 or the like, an operating lever 16 preferably provided with a more or less elongated hollow 171 and resting on the end 19 of the threaded portion 10 of the operating rod 8.

On this threaded portion, and below the lever 16 is mounted a stop 18, preferably made of curved shape, and intended to cooperate with the edge of the guide 9. The arrangement is such that when the stop 18 is screwed on the threaded portion 10, so as to contact with the edge of the guide 9, the valve 4 is mechanically moved in upwards direction and firmly pressed, through its packing 6, against its seat 5, thus ensuring a perfect tightness.

Under such conditions, the lever 16 may be dismounted and removed, and the container, together with its valve device having its valve blocked on its seat, may be safely shipped, without danger of injuring the lever or of accidental opening of the closure valve.

It will be observed that in case of transportation of the valve device separated from the container, and with the lever 16 removed and the valve 4 pressed against its seat 5, by proper screwing of the stop 18 on the threaded portion 10, this valve is prevented from striking its seat under shocks or vibrations, this rendering possible to retain these members in perfect operating conditions and to substantially reduce the required space for the obturating device.

To operate the valve device it will be sufficient to restore the lever 16 in its operating condition, by inserting the pin 15 in place, and thereafter to move the stop 18 away from the edge of the guide 9 in order to permit the axial movement of the valves.

This being done, by properly actuating the lever 16, one may move the valve 4 away from its seat and further, cause the packing 12 of the disc plate 11 to contact with the seat 13, thus isolating or separating the passage for the fluid from the container 2 towards the nozzle 3.

This operation is assisted by the combination, with the body 1, of a handle 24, which handle is also made easily separable and, to this end, constructed as a hollow body, mounted on an extension 241 of the body 1 and secured thereon through the intermediary of screws or the like 242.

The intimate contact of the packing 12 with the seat 13 may be further ensured by giving to the valve 4 an useful working surface which is larger than that of the valve 11, so that when the valve 4 is at once moved away from its seat, a more considerable pressure is exerted by the fluid on this valve than on the valve 11.

This is also applicable to the loading operation of the container 2 with fluid under pressure, which is generally effected through the intermediary of the nozzle 3 and the passage way 14. Under these conditions, by its action on the valve 4, the compressed fluid moves this valve away from its seat, while simultaneously applying firmly the disc plate 11, together with its packing 12, against the seat 13, owing to the larger useful working area of the valve 4. Naturally, this application may be improved by a manual action on the lever 16, but it is found in practice that the action of the fluid on the valve 4 is sufficient to secure a good tightness.

When necessary a more perfect tightness may yet be secured by blocking the valve 11—12 on its seat and Fig. 11 shows a means adapted to secure this result.

In accordance with this figure, a locking member 27 has been associated with the handle 24, such locking member being pivoted to said handle in any suitable manner, for example by means of a pin, not shown, and being provided with at least one notch such as 29 adapted to engage the end 23 of the lever 16 when the latter is depressed in the position for which the valve 11—12 is applied on its seat.

Then by moving upwards the stop 18 along the threaded portion 10, so that it engages the locked lever 16, the packing 12 may be applied against the seat 13 with any desired pressure.

In addition to the aforesaid results, a temporary mechanical blocking of the valve 4 on its seat may be ensured by means of the arrangement, and Fig. 12 shows an example of such an application.

In this figure, the stop 18 is made with a restricted portion 181, on which are preferably formed two lateral flat portions 183. By then engaging a member 182, having a fork shaped end, between the stop 18 and the upper surface of the guide 9, the return movement, and the application, with the desired pressure, of the valve 4 on its seat, is automatically obtained.

The combination of the fork branches with the flat portions 183 of the stop 18 enables this stop to be moved on the threaded portion 10, thus providing for an additional tightening of the stop and an additional pressure upon the valve.

To the handle of the fork member may eventually be given a suitable shape to enable it to be assembled with the end of the lever 16 during the temporary blocking of the valve 4 on its seat.

The embodiment of Fig. 13 comprises the members 1 to 7, 14 to 16 and 24 with the same arrangement as described with reference to Fig. 10 but the rod 7 of the valve 4 is connected, as by screwing, with an operating rod 8 shaped as a screw having a more or less quick pitch, and preferably a left screw pitch, of which an extension 81 is provided with a means for rotating the screw, as for example a hand wheel 132.

The screw 8 is engaged in a sliding sleeve forming the member 11 of the preceding arrangement, and on which is provided a bearing surface, preferably of conical shape, 111, which may be provided with a packing, not shown, and which cooperates with a correspondingly shaped seat 13, preserved in a cap 134 screwed on the end of the body 1.

Another bearing surface, preferably also of conical shape 135, is formed on the sleeve 11, and cooperates with a corresponding seat 136 formed at the end of a sleeve 131.

The sleeve 11 is also provided at its lower end with a shoulder 135 forming an abutment for

the lower end of the screw 8, and it is mounted for sliding movement within the sleeve 131 screwed in the body 1. Rotation of the member 11 in the sleeve 131 is prevented by a suitable means, such as a longitudinal rib 132, in engagement with a corresponding groove of the sleeve 131.

A device arranged as indicated operates in the following manner.

The valve 4 being applied on its seat by the pressure of the fluid filling the container 2, if one actuates the hand wheel 132 by rotating the latter, in anticlockwise direction for a left hand pitch of the member 8, the sleeve 11 is moved upwards and, sliding in the sleeve 131, engages, through its bearing surface 111, the seat 13, forming a tight seal between these members. From this moment, the continued rotation of the hand wheel 132 in the same direction as before, causes the lowering of the screw 8 and consequently of the rod 7 and the valve 4, moving the latter away from its seat. Thus the fluid may flow from the container 2 through the passage 14 or fluid may be introduced in the container 2 through the same passage.

The rotation of the hand wheel 132 and rod 8 in the other direction causes the upward movement of the screw 8 relatively to the sleeve 11 until the valve 4 has been restored on its seat, after which the sleeve 11 moves in downward direction relatively to the sleeve 131, and this until the bearing surface 135 engages the seat 136, any additional rotation of the hand wheel 132 strongly blocking the valve 4 on its seat.

To operate this valve by means of the lever 16, it will be sufficient, after having caused the sleeve 11 to raise relatively to the sleeve 131 for either a small distance or until the bearing surface 111 contacts with the seat 13, to move said lever downwards, thus causing the sleeve 11 to slide in the sleeve 131 and the valve 4 to move away from its seat, and this until the moment the bearing surface 135 and seat 136 come into contact with each other and form a tight joint between them. Thus the fluid may flow from the container 2 through the passage 14, and fluid may be introduced from outside into the container.

From the opening position, the return movement of the valve 4 on its seat is effected under the action of the fluid filling the container, but, should it be necessary or desirable, a return spring or other resilient member may be provided between the shoulder 137 of the body 1 and the lower surface of the sleeve 11.

In the embodiment of Fig. 14, the arrangement of the two valves 4 and 11 of Fig. 1 has been retained, but the operating rod 8 is shaped as a quick pitch screw, mounted in the guide 9 as shown, and at the top of which is provided a square portion 138 supporting an antifriction member, as a ball or roller 139.

The pitch of the screw 8 is such that the pressure of the fluid filling the container 2 is sufficient to move the valves 4 and 11 and the screw 8 to apply the valve 4 on its seat, after which a slight rotatory movement in the same direction imparted to the square portion 138 by means of a wrench or other suitable tool, complete this application by causing a slight jamming action of the screw in its guide.

In order to open the valve 4 and to apply the valve 11—12 on its seat 13, it will be sufficient to depress the lever 16 until this application is obtained, after which a slight additional rotation of the screw 8 results in a considerable contact pressure owing to a slight jamming action of the screw 8 in its guide 9.

According to Fig. 15, the arrangement of the valves 4 and 11 remains the same, but the intimate application of the valve 4 on its seat is ensured by means of a strong spring 140 inserted between a shoulder 141 of the body 1 and a guide member 142 mounted for sliding movement within the body 1, but without turning in the latter owing to the provision of a spur 43 having a head 44 engaged by part in the guide member 142 and by part in the body 1 and retained in the latter as by screwing.

The operating rod 8 for the valves is screw threaded and is engaged by screwing in the guide 142.

To open the valve 4 and to apply the valve 11—12 on its seat, it will be sufficient to depress the lever 16, the opening of the valve 4 being effected against the pressure of the spring 140.

The return movement of the valve on its seat is obtained by the action of the spring 142 and that of the fluid, but should the application so obtained be insufficient to ensure perfect tightness it will be sufficient to rotate the screw 8 in the screw releasing direction, this resulting in the further engagement of the guide 142 within the body 1 and the additional compression of the spring 140, thus increasing the applying pressure.

However, nothing will prevent the rotation of the screw 8 to be continued until the guide 142 contacts with the shoulder 45 of the body 1, after which any additional rotation, in the same direction, of this screw, forces mechanically the valve on its seat.

Similarly, the forced application of the valve 12 on its seat 13 may be obtained by sufficient screwing engagement of the member 8 into the guide 142 retained by the head 44 of the screw 43, as may be easily seen by inspecting the drawing.

In Fig. 16, the application of the valve 4 on its seat is also obtained by the action of the spring 140, the threaded rod 8 passing freely through the guide 142 but being prevented to rotate in this guide by known means not illustrated, while the more or less heavy compression of the spring is controlled by means of the nut 46 or an equivalent member.

In other respects, the arrangement is the same as in Fig. 15 except that the application of the valve 4 is obtained by a resilient action only and that of the valve 11—12 is obtained by means of the lever 16 only.

In Fig. 17, the arrangement is such that the forced application of the valve 4 on its seat does not materially affect the operating conditions of this valve by means of the lever 16.

According to this arrangement, the guide 142 of Fig. 16 is made in the form of a sleeve, sliding in the body 1, and a spring 47 resting against the back surface 48 of the valve 11 retains this sleeve in contact with the nut 46 engaged on the threaded rod 8. Crosswise, within a bore 49 of the body 1, is mounted a sliding bolt 50 pressed by a spring 51 which is compressed between the bolt 50 and a screw 52 closing the bore 49, the said bolt having an extension 53 adapted to engage below the lower flange 54 of the sleeve 142, and an inclined bearing surface 55 following the said extension.

On this inclined bearing surface rests a removable pin or rod 56 guided in a bore 57 of the body 1, and extending upwards to a higher level than that of the end of the threaded rod 8, so as to be

engaged by the lever 16 before any action of this lever on this threaded rod can taken place.

With the members occupying the positions illustrated in the figure, which shows the extension 53 of the bolt 50 engaged under the edge of the sleeve 142, it should be appreciated that the valve 4 is prevented to move away from its seat as long as a pressure applied on the pin or rod 56 has not caused a backward movement of the bolt 50 against the action of the spring 51, and thus also when the pin 56 is removed from its bore 57 as it is the case during transportation of the container or of the separated valve alone.

To the contrary by operating the nut 46, i. e. applying thereto a screwing movement, one can causes the valve 4 to be forced mechanically on its seat 5.

If however the pin 56 is depressed by lowering the lever 16, the bolt 50 will be moved against the action of its spring 51, thus releasing the sleeve 142, so that when the lever 16 engages the end of the threaded rod 8, it is able to move the latter and at the same time to move the valve 4 away from its seat, and this movement may be continued until the valve 11—12 is applied on its seat 13.

The return of the valve 4 on its seat is obtained by the action, on this valve, of the fluid filling the container, which action may be assisted, when necessary, by that of a spring or other resilient member, mounted between the shoulder 141 of the body 1 and the valve 11.

At the same time the assembly formed by the valves 4 and 11 is raised, the sleeve 142 is raised and returns to its original position, permitting to the bolt 50 to engage again, through its projection 53, under the bottom edge of said sleeve.

Should then the tightness of the valve 4 not be perfect, it will be sufficient to screw up somewhat the nut 46 to secure a perfect tightness.

In Fig. 18, the arrangement comprises the same valve arrangement 4 and 11 as before, but the operating rod is threaded at its external end only, where said rod is provided with a nut 46.

Between this nut and the shoulder 48 formed by the upper surface of the valve 11 is mounted a sleeve 58 sliding on the rod 8, but engaged through a screw thread, having preferably a quick pitch in a housing 59 of the body 1.

It will be seen that when moving this sleeve in its housing, consequent to a suitable rotatory movement imparted to a polygonal or milled portion 158 thereof, either of the valves 4 and 11 may be intimately applied on their seats. Similarly by a limited movement of the said sleeve, the valves may be sufficiently released so that the one, 4, is moved away from its seat and the other 11 is applied on its seat by lowering the lever 16.

In the arrangement according to the preceding figures, the operation of the valves is obtained by a simple lever, and it has been said that this operation may also be effected by other means.

In the Figures 19 and 20, the operation of the valves is obtained through the intermediary of cam levers.

As in the preceding figures, 1 designates the body of a valve device, 4, a main valve, preferably provided with a packing made of one of the materials of the kind specified, 6, and cooperating with a seat 5; the reference 11 designates an auxiliary valve, provided with a packing, also preferably made of one of the materials of the kind specified, 12, which cooperates with a seat 13; 7 designates the rod of the main valve, which is screwed in an operating rod 8; 3 designates the discharge nozzle and 14 the passage for the fluid extending between this nozzle and the container or pipe (not shown) with which the valve device is associated. 9 designates the guide screwed on the body 1 and through which the rod 8 passes.

This rod is here terminated by a ring made of two parts 60 and 61, connected together by means of screws or the like 62, so as to provide a rotation bearing for a shaft 63 guided in slots 64 of a bell shaped member 65 screwed on the body 1 at 66. This shaft is provided at its ends with non circular portions, for example square in cross section, 67, on which may be placed a lever or other operating member 68 as illustrated in Fig. 20.

The shaft 63 is further provided with two cam shaped members, 69, and in a hole 70 of the bell shaped member 65 is mounted a movable stop 71 the position of which may be adjusted as desired by operating the screw 72 ending in a square or other portion 73 enabling a wrench or other operating member to be placed thereon.

The shape of the cams 69 is such that, in the position illustrated by the figures, they rest, through a boss 74, against the upper surface of the guide 9, thus raising the rod 8 and the valves 11 and 4 and strongly pressing the packing 6 against the seat 5, while in another position, obtained by turning the lever 68 in the direction of the arrow in Fig. 20, preferably with an angle equal to or only slightly larger than 90°, they are caused to engage through a boss 75, on a stop 71 and at the same time to depress the rod 8 and the valves 11 and 4, moving this latter valve away from its seat 5 while firmly pressing the packing 12 on the seat 13.

As the stop formed by the guide 9, as well as the stop 71, are adjustable, upon closure of either of the valves, the pressure between its metallic packing and its seat may always be increased in order to remedy to any lack of tightness.

In respect of the stop 71, the adjustment is obtained by a suitable action exerted on the screw 72 as hereinbefore indicated, and as regard the stop 9, the operation may be effected by means of any suitable device, as for example by means of a rod or other member engaged in holes 76 formed within the peripheral portion of the member 9, as illustrated.

In practice, the stops 9 and 71 are adjusted so that the requisite strong application is obtained when said cams engage the said stops.

It may be easily seen that as in the preceding arrangements, the lever 68 controlling the operation of the cams 69 may be separated or removed for transportation purposes; that the passage 14 may be isolated or separated from the operating mechanism as well during the discharge of the fluid as during the re-loading of the container or pipe with fluid under pressure, and that during loading, the application of the valve 11 on its seat may be automatically ensured by forming the valve 4 with an useful working area greater than that of the valve 11, the auxiliary mechanical application of this latter valve on its seat enabling any possibility of fluid leak at this valve to be prevented. If desired, the shaft 63 may be locked in either of the blocking positions of the valves 4 and 11, for example by placing on the square portions 67, levers or similar members 77, which on the other hand are engaged by means of hook shaped portions 78, on screws or the like 79 screwed in the body 1.

In the arrangement according to Figures 19 and 20, the main valve 4 opens against the pressure of the fluid while the auxiliary valve opens in the opposite direction.

Without any change in the remainder of the arrangement, it can be arranged so that the main and auxiliary valves open in the direction of the fluid pressure and the opposite direction, respectively, and Fig. 21 shows, by way of example, an arrangement answering this condition, in which the seat 5 for the main valve is turned upwardly and the seat 13 of the auxiliary valve is turned downwardly, and further formed on an auxiliary sleeve 211, mounted in a fluid tight manner, as by screwing, in the body 1, the screw threaded portions of each of the members being widely extended.

The valves members proper are formed on a single member 212, adapted to slide in the body 1, and formed integral with or otherwise connected to the operating rod 8.

According to the embodiment illustrated in the Figures 22 and 23, the part 8 of the operating rod is provided with two flat portions 80 within the area of which this part of the rod is formed with an elongated opening 81. Past the flat portions 80 the operating rod shows a reduced and threaded portion 10 on which is mounted a bell shaped stop 71 and an adjusting nut 82.

In the opening 81 freely passes a shaft 83 which is made with advantage of square cross section, and on this shaft two cam shaped members, 69, are mounted adjacent the flat portions 80 and each of these cam members presents two bosses or extensions 74 and 75, best visible on Fig. 23 and adapted to engage with bearing surfaces 84 of the portion 8 of the operating rod and on bearing surfaces of the adjustable stop 71, respectively, when the shaft 83 is rotated.

On the shaft 83 are also mounted two sleeves 85, preferably made with internal holes 86 showing a square cross section fitting the shaft 83, and with external cylindrical bearing surfaces passing through corresponding openings 88 of a cap 89 screwed on the body 1 at 90. The cap 89 is retained in its adjusted position by means of a nut 91.

As in the arrangement of the Figures 19 and 20, an operating lever 68 for the valves is engaged on one of the ends of the shaft 83 and in the position of the lever illustrated in Fig. 23, for which position the bosses or extensions 75 rest on the stop 71, the operating rod is raised and the valve 4 is firmly pressed on its seat 5, while should the bosses or extensions 74 be caused to move from this position to a position in which they cooperate with the bearing surfaces 84 of the rod 8, as indicated by the arrow in Fig. 23, they cause this rod to be lowered and the valve 11 to be applied on its seat.

The force with which the respective valves are applied on their respective seats is adjusted by means of the nut 82 and the position of the cap 89 relatively to the body 1, by screwing or unscrewing this cap which, on the other hand, is secured in the position of adjustment by means of the nut 91.

As in the hereinbefore described embodiments, during the re-loading of the associated container or pipe (not shown) with fluid under pressure, the valve 11 may be retained on its seat by a differential action of the fluid on the valves 4 and 11, the mechanical action of the cams 69 being eventually used to assist in avoiding any possibility of leakage.

Figure 24 shows the invention as applied to a valve device provided with an additional obturating device illustrated as the combination of a diaphragm and a percuting member, but which may be also formed by another valve.

This embodiment includes a general arrangement similar to that of the Figs. 10 and 11, housed in an auxiliary body 92 mounted in a fluidtight manner in the body 1, as by a mutual screw threading engagement of extensive length and, with eventual interposition of a packing joint 93. The fluid passage 14 is formed by part in the body 1 and by part in the auxiliary body 92, and so that they concord with each other when the auxiliary body occupies its operating position.

Within the housing 94 of the body 1, there is mounted in known manner a diaphragm 95 made of metal and closing the fluid passage 96, and a percuting member 97 extended to the vicinity of the lower surface of the valve 4.

Under such conditions, the initial actuation of this latter valve, to secure its opening, causes the said valve to engage the end of the percuting member 97, and the latter to pierce the diaphragm 95, thus permitting the discharge of the fluid from the associated container 2.

The continued emptying of this container may then taken place as explained with reference to the Figures 10 and 11, but naturally the obturating action of the diaphragm may be restored only by replacing the latter when the container has been fully emptied.

It will be appreciated however, that due to the blocking of the main valve on its seat by means of the member 18, together with the additional possibility of removal of the lever 16 and handle 24, the diaphragm 95 will not be disturbed or injured during transportation of the valve device either mounted on a container or as a separate article.

In reference to the described arrangements, its has been said that the tightness is perfectly ensured as well during the loading operation as during the discharge of the fluid by means of the valve arrangements as set forth.

However, during the time period required for moving the valve or valves from the opening position to the closing position, or vice-versa, a slight escape of the fluid may occur in case the movement is not effected with a considerable rapidity, thus leaving the impression of a defect in tightness of the device.

To remedy this drawback, the operating mechanism may be provided with a packing of appropriate nature and location.

By way of example only, Fig. 25 shows how a packing member may be associated with an obturating device according to Fig. 16, it being understood that this arrangement, or a similar or equivalent arrangement, may be associated with the other described embodiments of obturating or valve devices.

In Figure 25, a packing member has been provided between a part of the disc plate 11 or the rod 8 and the body 1, said packing member being formed with advantage of a washer or a series of washers 8b made of a more or less soft metal such for example as lead, engaged on a supporting portion of the disc plate 11 or of the rod 8, or inserted in the body 1. In this example the washer or washers are mounted on the disc plate 11 and the washer or washers 8b is or are re-

tained into place by means of a screwed ring **8***d*. In case several washers **8***b* are used, the latter are preferably separated by washer made of hard metal or the like.

Although the invention has been described in relation with certain embodiments only, it is to be understood that it is not limited thereto and that several modifications may be made in the arrangements set forth while other operating devices providing at least for the axial movement of the valves may be used instead of those more particularly described without exceeding the limits of the invention.

VALENTIN REMUS.

PUBLISHED

MAY 25, 1943.

BY A. P. C.

V. REMUS

VALVES OR OBTURATING DEVICES FOR FLUID PIPES AND CONTAINERS UNDER HIGH PRESSURE, PARTICULARLY FIRE EXTINGUISHERS AND THE LIKE

Filed April 17, 1940

Serial No. 330,197

7 Sheets-Sheet 1

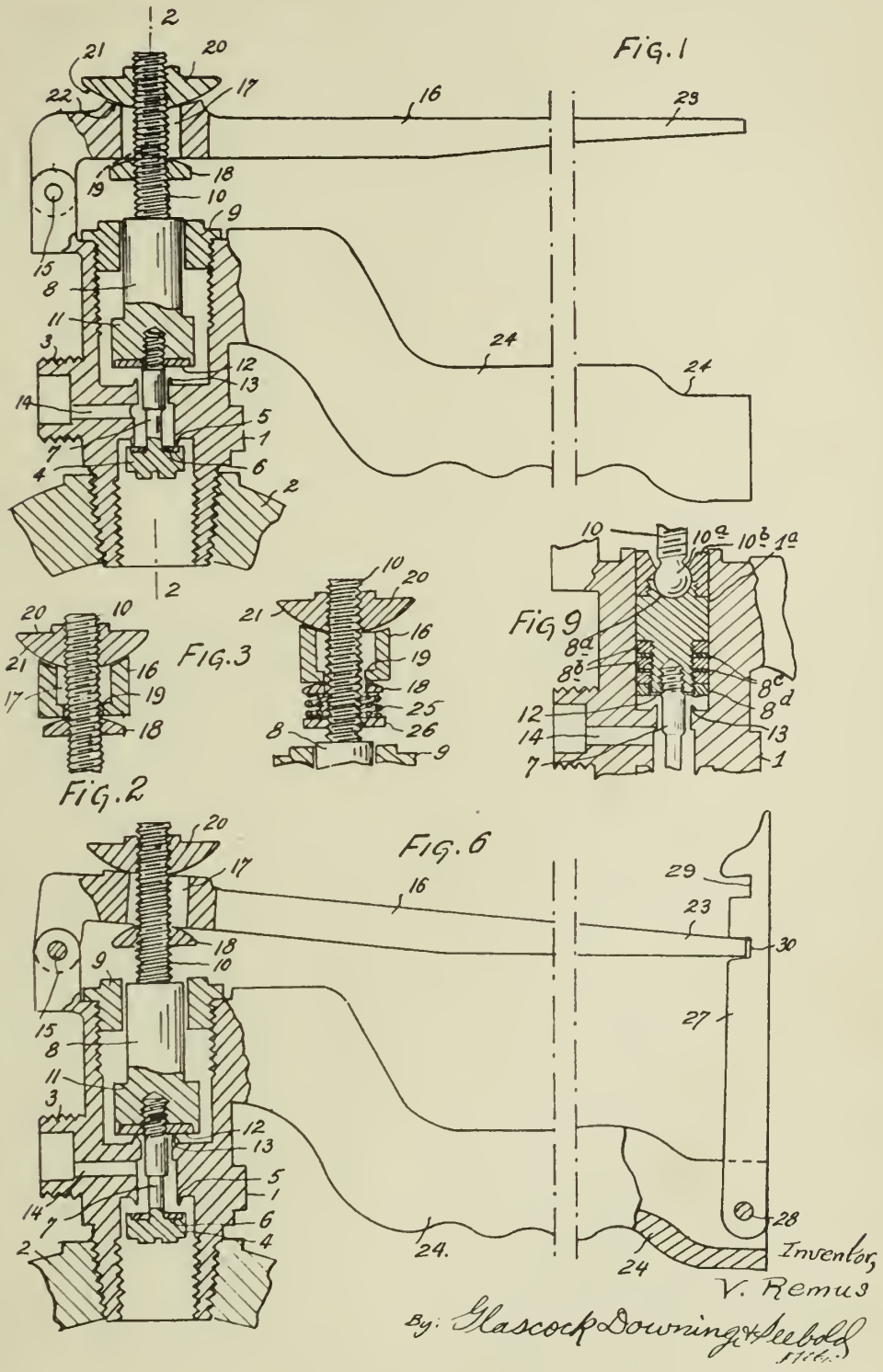

PUBLISHED

MAY 25, 1943.

BY A. P. C.

V. REMUS

VALVES OR OBTURATING DEVICES FOR FLUID PIPES AND CONTAINERS UNDER HIGH PRESSURE, PARTICULARLY FIRE EXTINGUISHERS AND THE LIKE

Filed April 17, 1940

Serial No. 330,197

7 Sheets-Sheet 2

FIG. 4.

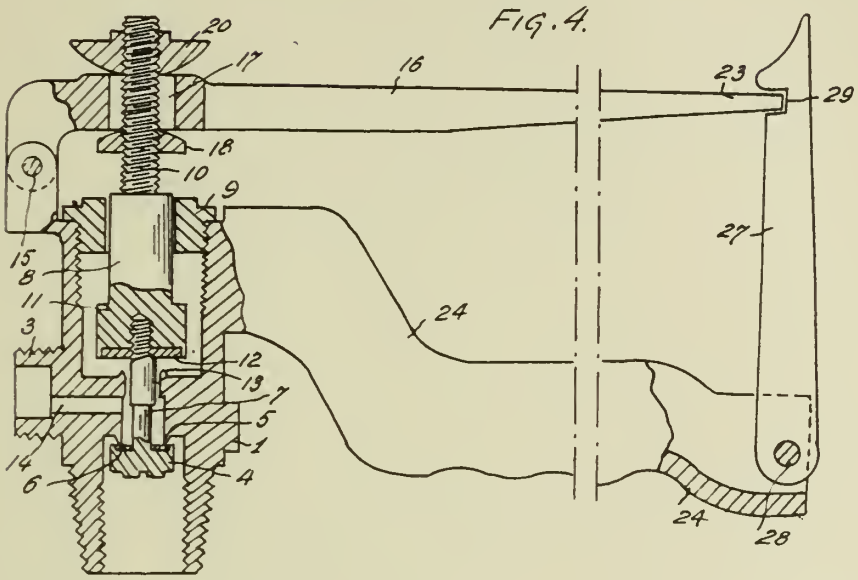

FIG. 5

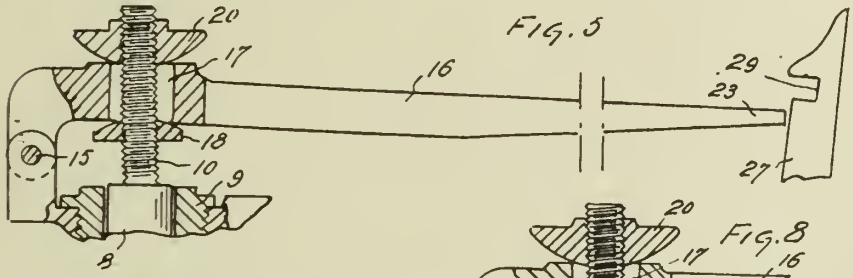

FIG. 7

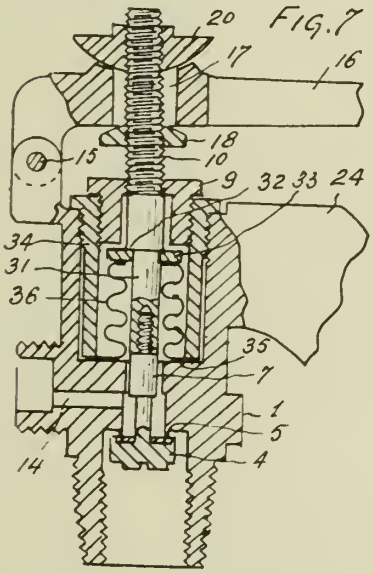

FIG. 8

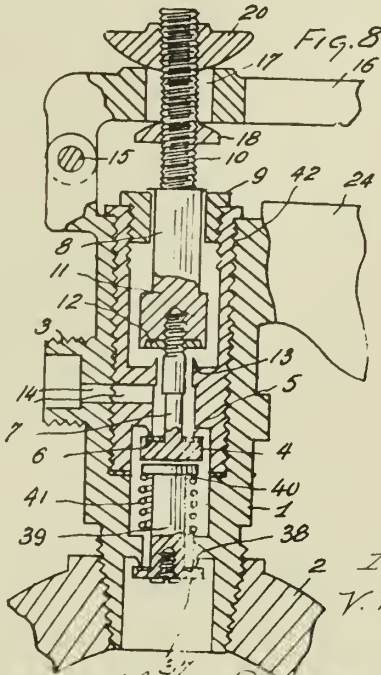

Inventor,
V. Remus

Wm. Wescott Downing & Seebold Attys

PUBLISHED

MAY 25, 1943.

BY A. P. C.

V. REMUS

VALVES OR OBTURATING DEVICES FOR FLUID PIPES AND CONTAINERS UNDER HIGH PRESSURE, PARTICULARLY FIRE EXTINGUISHERS AND THE LIKE

Filed April 17, 1940

Serial No. 330,197

7 Sheets-Sheet 3

Fig 10

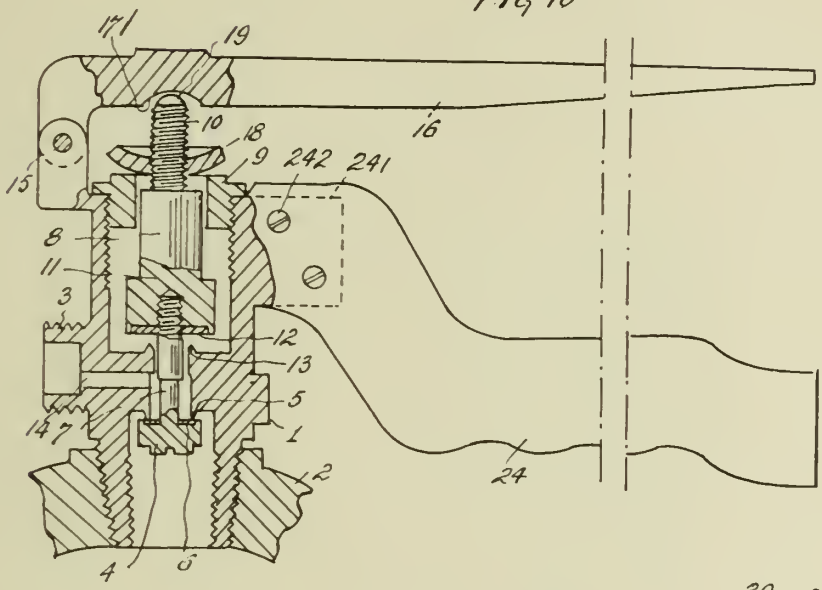

Fig 11

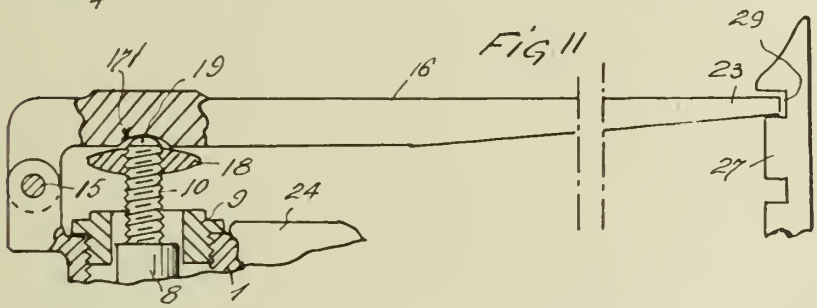

Fig. 12

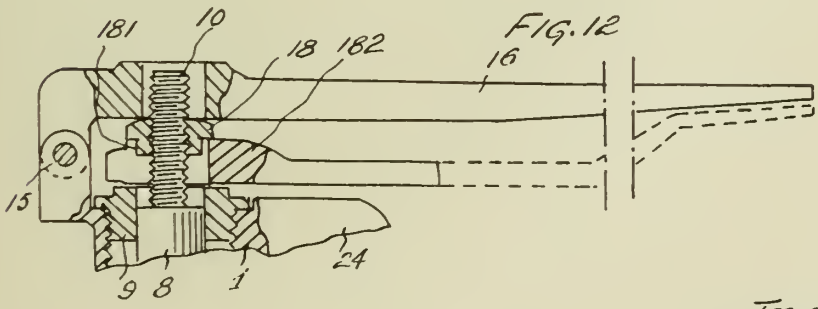

Inventor,
V. Remus

By: Glascock Downing & Seebold
Attys.

PUBLISHED

MAY 25, 1943.

BY A. P. C.

V. REMUS

VALVES OR OBTURATING DEVICES FOR FLUID PIPES AND CONTAINERS UNDER HIGH PRESSURE, PARTICULARLY FIRE EXTINGUISHERS AND THE LIKE

Filed April 17, 1940

Serial No. 330,197

7 Sheets-Sheet 4

FIG. 13

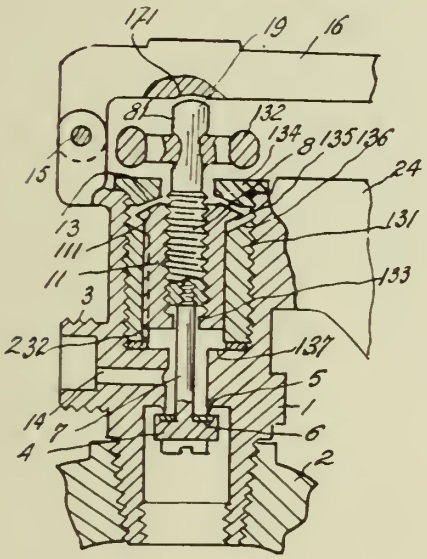

FIG. 14

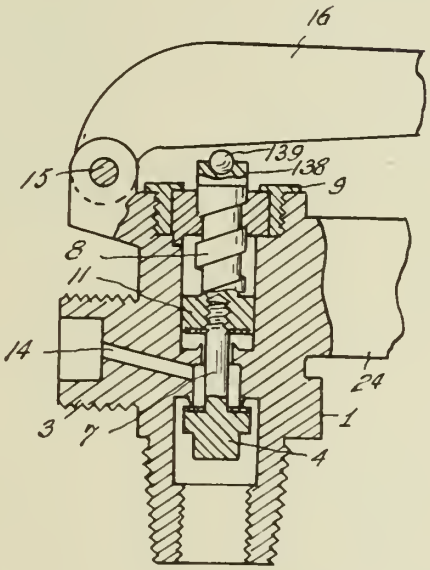

FIG. 15

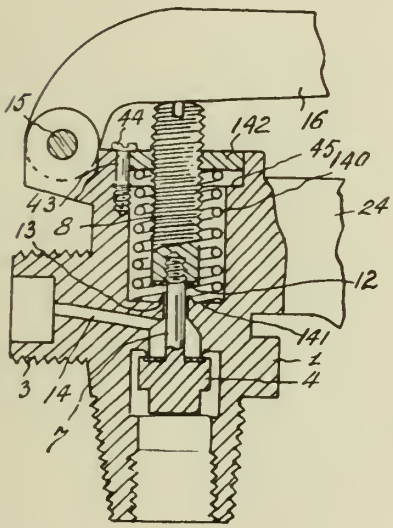

FIG 16

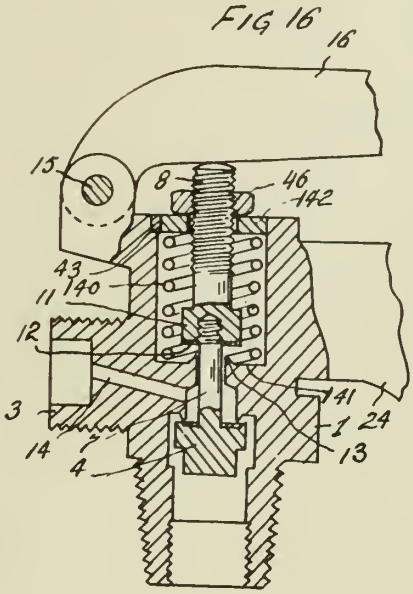

Inventor,
V. Remus

By: Glascock Downing & Seebold
Attys.

PUBLISHED

MAY 25, 1943.

BY A. P. C.

V. REMUS

VALVES OR OBTURATING DEVICES FOR FLUID PIPES AND CONTAINERS UNDER HIGH PRESSURE, PARTICULARLY FIRE EXTINGUISHERS AND THE LIKE

Filed April 17, 1940

Serial No. 330,197

7 Sheets-Sheet 5

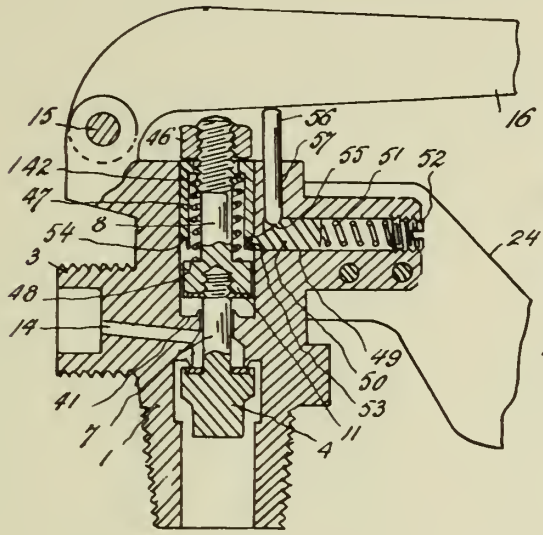

FIG. 17

FIG. 25

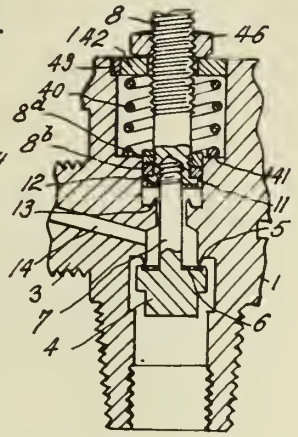

FIG. 24

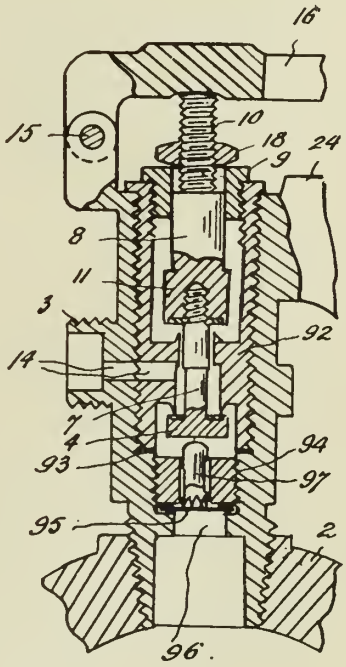

FIG. 18

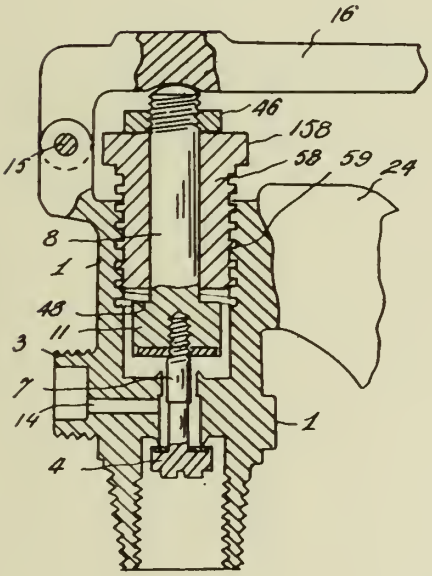

Inventor,
V. Remus

By: Glascock Downing & Seebold
Attys.

PUBLISHED

MAY 25, 1943.

BY A. P. C.

V. REMUS

VALVES OR OBTURATING DEVICES FOR FLUID PIPES AND CONTAINERS UNDER HIGH PRESSURE, PARTICULARLY FIRE EXTINGUISHERS AND THE LIKE

Filed April 17, 1940

Serial No. 330,197

7 Sheets-Sheet 6

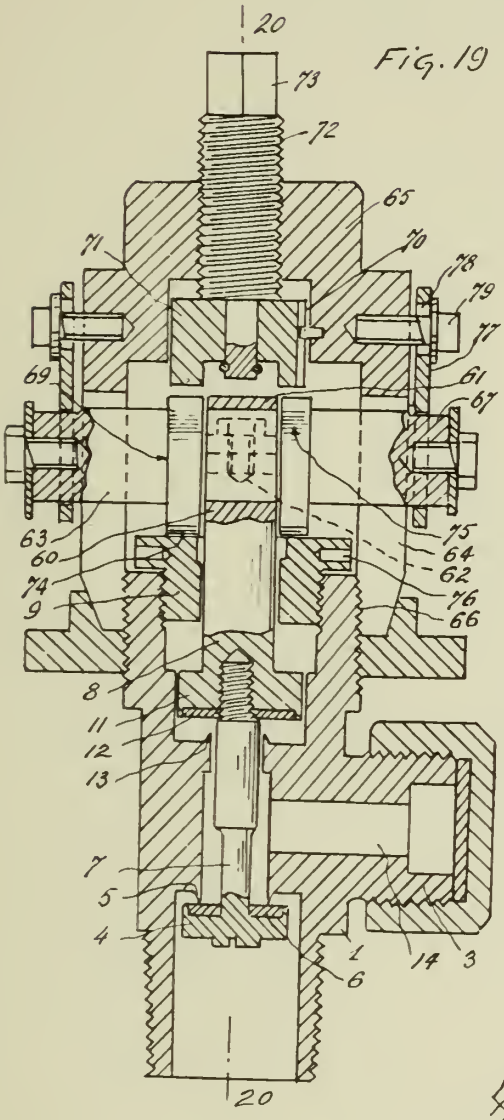

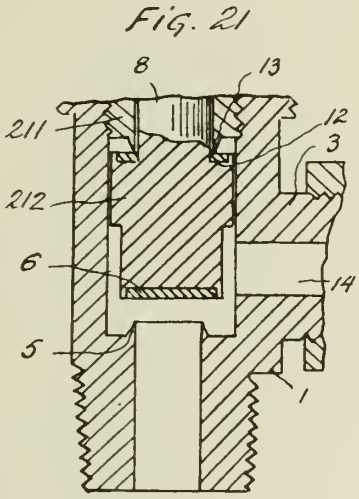

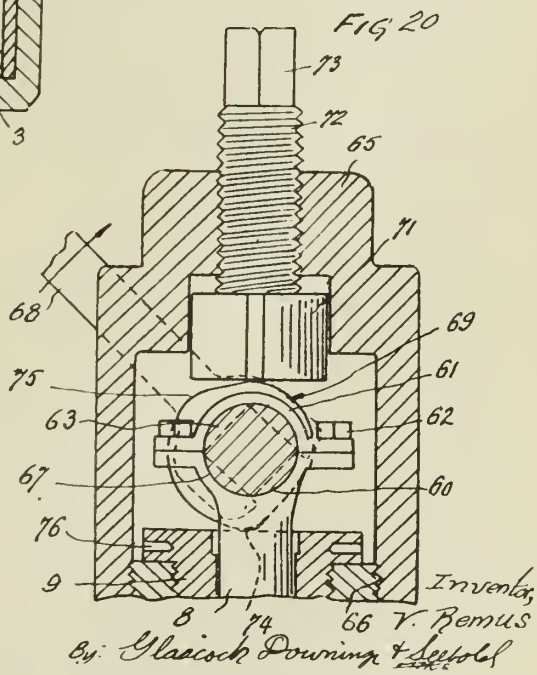

PUBLISHED

MAY 25, 1943.

BY A. P. C.

V. REMUS

VALVES OR OBTURATING DEVICES FOR FLUID PIPES AND CONTAINERS UNDER HIGH PRESSURE, PARTICULARLY FIRE EXTINGUISHERS AND THE LIKE

Filed April 17, 1940

Serial No. 330,197

7 Sheets-Sheet 7

FIG 22

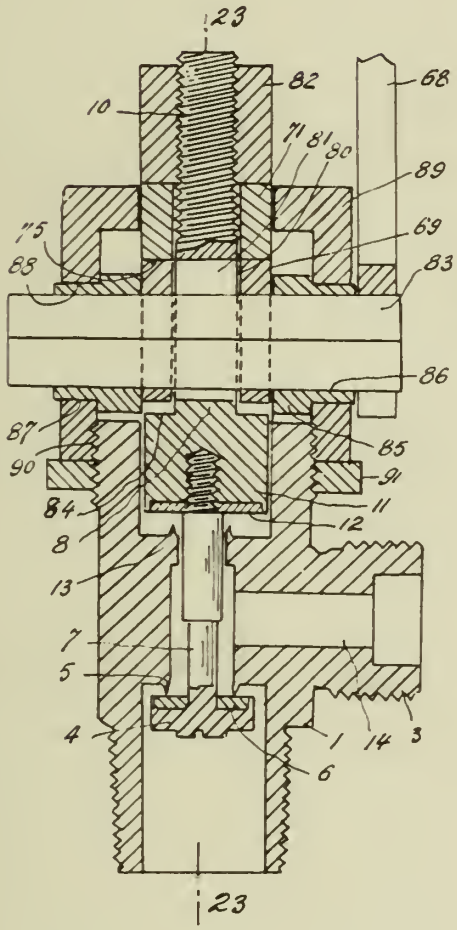

FIG. 23

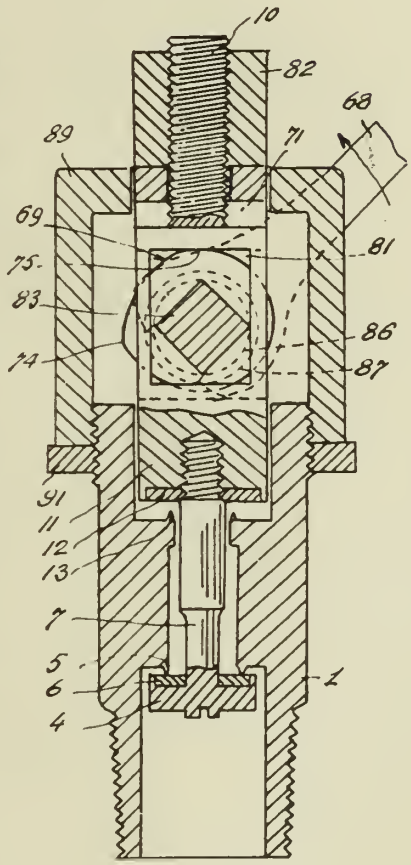

Inventor;
V. Remus

By: Glascock Downing & Seebold
Attys.

Published May 25, 1943 Serial No. 330,226

ALIEN PROPERTY CUSTODIAN

MECHANICAL LIQUID FUEL ATOMIZING BURNER OF VARIABLE DISCHARGE

René Anxionnaz, Paris, and Roger Imbert, Mantes, France; vested in the Alien Property Custodian

Application filed April 17, 1940

This invention relates to mechanical liquid fuel atomizing burners, in contradistinction to steam spray atomising burners, of the kind which are used for instance for firing boiler furnaces or feeding gas turbines and in which the oil or other liquid fuel is fed under pressure to the burner.

Mechanical liquid fuel atomizing burners of the general kind referred to hitherto employed do not lend themselves to an important variation of discharge owing to the fact that the fuel atomization being obtained by forcing the fuel to pass under high pressure through narrow conduits or holes of determined constant section, variations of discharge can only be obtained by modifying said pressure, such modification of pressure being proportional to the square of the discharge (or to the discharge itself if the fuel outflow is purely viscous). But as the atomization is good only within rather narrow limits of pressure and as the discharge varies to a smaller extent than the pressure, a determined burner can be used only for a discharge comprised between very narrow limits, it being therefore indispensable to change the burner where the variation of normal working conditions is important; this constitutes a serious objectionable feature of the burners hitherto employed.

The present invention aims to obviate this objectionable feature and also some other objectionable features inherent to burners hitherto in use, as will be apparent hereinafter.

A burner made according to this invention will permit of a good atomization for all discharges from zero to the maximum dictated by steam boiler or other power plants under consideration, whereby any changing of burner will be avoided.

In a burner according to this invention, the holes or conduits of atomization are made to vary in function of discharge, and such variation is obtained by throttling these holes or conduits at will by means of a control slide valve gearing movable in front thereof.

In one form of burner according to this invention the atomization holes or conduits are provided each with a narrow elongated slot the longer dimension of which is adapted to be changed or modified at will by means of said control slide valve gearing, while the smaller dimension thereof remains invariable; in this way there is provided a variable free passage for the liquid fuel to be atomized and a good atomization thereof is insured whatever be the required discharge of the burner.

The invention also provides for improved design of atomization holes or conduits and several modes of controlling the discharge of burners, one such mode being of nature to render the control of discharge entirely automatic by utilising the pressure under which the liquid fuel is introduced into the burner.

The invention will now be described, by way of example, with reference to the accompanying drawing in which:

Fig. 1 is a longitudinal sectional view of one form of the burner according to the present invention (taken on the line I—I of Fig. 2);

Fig. 2 is a cross-sectional view thereof taken on the line II—II of Fig. 1;

Fig. 3 is an axial sectional view of a burner discharge controlling arrangement according to this invention;

Fig. 4 is a longitudinal sectional view of a modified form of the burner according to this invention (taken similarly to Fig. 1);

Fig. 5 is a graph showing variations of discharge in function of pressures.

In the burner illustrated in Fig. 1 and 2, the liquid fuel is fed at *a* and passes through an annular space *b* comprised between the burner body *c* and an internal tubular part *d* up to, and through holes or conduits *e* which open tangentially into a chamber *f* by means of narrow slots e_1 made along generating lines of the inner cylindrical surface of the tubular part *d*.

Atomization of the liquid fuel is produced by reason of the passage of the fuel through the holes *e* and slots e_1 under the action of very high pressure (of the order of 30 to 40 kilos per sq. cent. or atmospheres), whereby the liquid fuel is set into violent turbulence within the chamber *f* from which it escapes atomized through a jet-hole *g* into a fire or combustion chamber.

The slots e_1 which are of elongated form with their longer dimension along said generating lines and of very narrow width, may be throttled by means of a slide valve *h*, whereby the free passage for the liquid fuel may be rendered proportional to the required discharge of burner so as to obtain this discharge with a constant pressure upstream from the holes *e*, that is to say, in the annular space *b*. It will be understood that such pressure will be adjusted so as to insure the best atomization, so that the burner may operate at all discharges under the most favourable conditions.

The width of the holes *e* and that of the slots e_1 may be made variable throughout their height. In particular, it will be of advantage to give them a smaller width in the portion corresponding to smaller discharges and increase the width gradually towards the portion corresponding to the largest opening of the slide valve, so as to reduce the necessary stroke of the latter, while remaining under best possible conditions for operation at small discharges. Furthermore, when said width is variable the angle in a point, between the hole axis and wall of the chamber *f*, may be modified in this point in function of the width

so that the angle of fuel inflow into the chamber *f* remain equal to that at which the best possible atomization be secured.

It will be understood that the particular design for the holes *e*, as illustrated in figures, is indicated only by way of example, and modifications may be brought thereto without departing from the scope of the invention.

The simplest way in which the slide valve *h* may be displaced by a hand control from the outside is illustrated in Fig. 1, wherein the valve rod extends from the burner body through a stuffing box *i* which has for its object to prevent the liquid fuel from leaking outwardly. The valve rod has a threaded portion *l* and carries a hand wheel *k* by means of which the rod may be displaced at will. The wheel *k* may be set into any desired position by means of a stop spring *m* one end of which is fastened to burner body and the other cooperates with notches arranged on the outer periphery of the wheel. The threaded portion *l* of the valve rod may also be provided externally of the burner body. The valve rod may also be longitudinally displaced without being rotated, in known manner by means of a confined nut entrainable by the hand wheel.

In Fig. 3 is illustrated a modified form of the invention, wherein the slide valve *h* is controlled with the aid of a servo-motor or self-starting motor. To this end the valve rod carries a piston *p* which on one side is acted upon by a fluid under pressure introduced through o into the space *n* and on the other side by a spring *r* or another resilient agent (such for example a fluid under pressure). By causing the pressure of the fluid introduced into *n* to vary, a displacement of the piston *p* and with it of the valve *h* is effected, the latter thus being brought into, and maintained in, the position corresponding to the required discharge of the fuel. This arrangement therefore permits to control from distance the discharge of one or several fuel burners and eventually also their automatic regulation by any suitable means adapted to regulate the pressure of the fluid in the space *n* in function of the discharge to obtain.

According to this invention, another arrangement for controlling the position of the discharge regulating member by means of the fuel pressure itself is illustrated in Fig. 4. The fuel is brought to the burner by a conduit *q* and spreads throughout the internal space *s* wherein prevails substantially the same pressure as in the conduit *q* and wherefrom the fuel under the action of said pressure passes through the atomization holes *e* to be finally ejected through the jet-opening *g* into the combustion chamber. The passage of the fuel through the holes *e* is regulated by positions of the slide valve *h*. The latter carries a piston *t* one side of which is subjected to the pressure prevailing in the internal space *s* occupied by the fuel. A counter-spring *u* holds the piston in equilibrium. Any fuel leakages liable to occur between the piston *t* and the cylinder in which the piston moves are returned through a conduit *v* into the atomization chamber *f* wherein they mix with the atomized fuel ejected into the fire chamber. The conduit *v* is made to sufficient cross-section in order that the pressure underneath the piston remains substantially equal to that prevailing in the chamber *f*. This arrangement has a great advantage of preventing any fuel from leaving outside the burner and of dispensing with any stuffing boxes.

With this arrangement it is evident that when the pressure of the fuel introduced into the burner through the conduit *q* is increased, the increased pressure spreads over the space *s* up to the piston *t* and moves the latter downwards, thereby compressing the spring *u* and opening the holes *e* to a greater extent, hence increasing the fuel discharge. Inversely, when the fuel pressure is decreased the slide valve under the action of the spring *u* moves upwardly whereby the fuel discharge is decreased.

The required dimensions of the piston and resilience of the spring can readily be determined so that the two extreme positions of the slide valve would correspond to two pressures chosen beforehand and differing little enough in order that the atomization would remain good throughout the intermediate zone. If, for example, a good atomization requires pressures comprised between 35 and 40 kg/cm² a burner may readily be made in which the slide valve would be entirely closed at a fuel pressure of 35 kg/cm² and entirely open at a fuel pressure of 40 kg/cm². In this way, a satisfactory atomization will be obtained for all fuel discharges comprised between zero and the maximum contemplated.

In Fig. 5 is shown a graph wherein, by way of example, a curve AC represents discharge variations in function of respective pressures in a mechanical burner according to this invention, and a curve OC represents such variations in an ordinary mechanical burner of heretofore used kind. OA and OB represent the minimum and maximum pressures, respectively, between which the fuel atomization remains good, the corresponding zone being hatched. The essential difference between the two burners is quite apparent; it resides in the fact that in the ordinary burner the section of the atomization holes or conduits is constant and the zero discharge corresponds to zero pressure, whereupon only a small part EC thereof is comprised in the zone of good atomization, with the result that such a burner may be used only for discharges comprised between F and D. On the contrary, with the burner according to this invention, the zero discharge may be obtained at a pressure equal or superior to the minimum necessary for a good atomization, the operation thereof remaining satisfactory for all discharges comprised between *o* and the maximum contemplated.

It is to be understood that, without departing from the scope of this invention, the piston *t* may be replaced by a diaphragm or a deformable membrane, and the spring *u* may be suppressed if the elasticity of the deformable member permits of doing so.

Apart from the advantages resulting from the simplicity of construction and suppression of stuffing boxes for the slide valve rod, the possibility of control of the burner according to this invention by means of the fuel pressure per se permits of many advantageous applications of this burner to regulation apparatus employing such burners (for example, in connection with steam power plants, industrial furnaces, gas turbines, etc.)

RENÉ ANXIONNAZ.
ROGER IMBERT.

PUBLISHED

MAY 25, 1943.

BY A. P. C.

R. ANXIONNAZ ET AL
MECHANICAL LIQUID FUEL ATOMIZING
BURNER OF VARIABLE DISCHARGE
Filed April 17, 1940

Serial No.
330,226

Fig 2

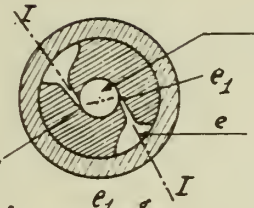

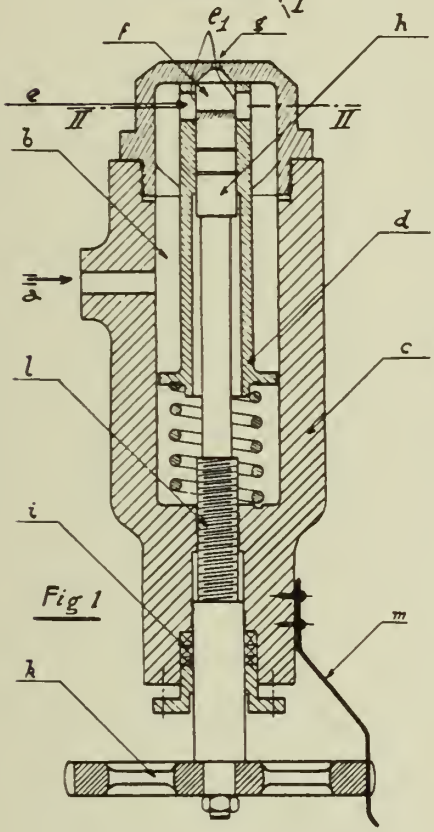

Fig 1

Fig 4

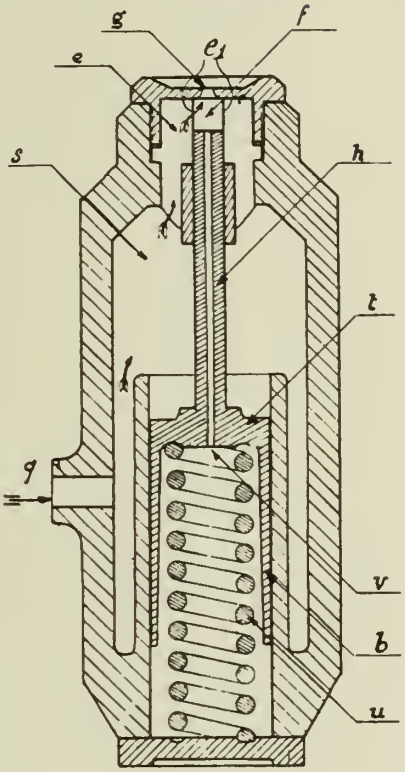

Fig 5

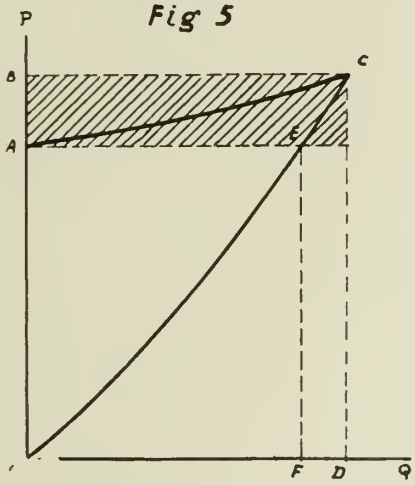

Fig 3

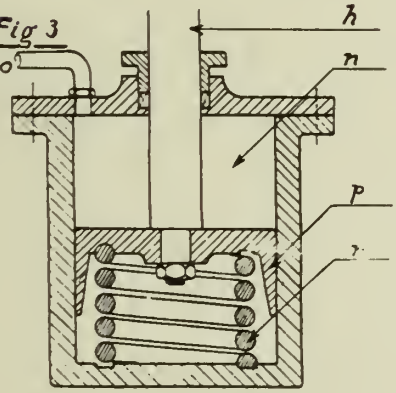

Rene Anxionnaz
Roger Imbert
By
Watson, Cole, Grindle & Watson
Attys.

Published May 25, 1943

Serial No. 330,510

ALIEN PROPERTY CUSTODIAN

RUNNING WHEEL SUPPORT

Anton Lentz, Heidelberg, Germany; vested in the Alien Property Custodian

Application filed April 19, 1940

The present invention relates to the support structure of the single wheel in three wheel carriages, more particularly of the steerable front wheel in three wheel farming vehicles and tractors having a support arm for said single wheel which arm embraces said wheel on one side only. The object of the invention is to avoid revolving parts between the wheel disc and the wheel support to prevent pulling in and spooling of parts of plants, grass and the like.

According to the invention the stationary housing of the single wheel together with the rotating journal and the journal bearings forms a self contained individual unit which has an open end which is disconnectable connected with and closed by the support arm of the single wheel so that there are no rotating parts between said arm and said wheel. In conventional four wheel carriages the axle carriers are usually so remote from the wheels that there is little danger of spooling of foreign matter on the axles because such undesired matter pushed aside by the wheels may remove itself between the wheel and the axle carrier. This is not possible in the case of an individual wheel with a support arm closely adjacent to one side thereof whereby parts of plants, grass, and the like get between the support arm and the wheel and have no chance to escape. With the construction according to the present invention rotating elements between the revolving wheel disc and the stationary support arm are avoided whereby a conventional bearing arrangement may be employed in which the housing of the bearing is stationary and the wheel journal revolves therein. Such a bearing arrangement has not been used as yet in combination with the support of a steerable individual front wheel of a three wheel carriage whereby a support arm embraces the wheel only on one side. The conventional bearing and support arrangements for such a steerable front wheel favor pulling in and spooling of parts of plants and grass whereas the construction according to the present invention definitely prevents such undesired conditions.

According to the invention the wheel disc may be of bell shaped cross sectional configuration and substantially surround the housing of the bearing. With this arrangement the outer end of the bearing unit from which the revolving bearing journal projects is well covered and is well protected against entry of undesired foreign matter. The end of the support arm is preferably made like a disc which is provided with a recess into which fits a projection of the bearing housing. One end of the housing is completely closed by said disc. The wheel disc or hub may be directly and disconnectably connected with the journal.

Further and other objects of the present invention will be hereinafter set forth in the accompanying specification and claims and shown in the drawing which, by way of illustration, shows what I now consider to be a preferred embodiment of my invention.

In the drawing:

Figure 1 is a side view of the wheel and support according to the present invention.

Figure 2 is a sectional view of the wheel and wheel support according to the present invention.

Like parts are designated by like numerals in both figures of the drawing.

The wheel comprises the disc or hub part 1 which carries the felloe 2 for supporting the tire 3. Part 1 is bell shaped and projects on one side beyond the felloe or rim 2. The wheel is carried by means of a support arm 4 which embraces the wheel on one side only. The support arm 4 is revolvably connected with the other part of the carriage which is not shown as it does not form a part of the present invention, by means of a journal 5 which is supported in a bearing 6. The end 7 of the arm 4 has the form of a disc which is provided with a recess 8 into which reset fits a projection 10 of the housing 9. Housing 9 has a flange 11 which is disconnectably connected with the support 4 by means of bolts 12. Bearings 13 and 14 for the journal 15 are arranged within the housing 9. A nut member 18 screwed to the threaded end 16 of the journal 15 and secured thereto by means of a pin 17 holds bearing 14 in place. The housing 9 is located within the bell shaped wheel disc 1 and is tightly closed at the end facing said disc by means of a cover 19. The housing 9 together with the journal 15, the bearings 13 and 14, the nut 18 and the cover 19 forms a self contained unit which is disconnectably connected with the support 4 by means of the flange 11, and with the inner side of the bell shaped disc 1 by means of the journal flange 20 and the bolts 21.

For changing or replacing the wheel the bolts 21 are removed. The journal 15 remains connected with the support 4 together with the bearings 13 and 14 and the housing 9.

The arrangement shown prevents parts of plants, grass, etc. from forcing their way into the bearing or onto the journal because the housing 9 is stationary and its free end is so far remote from the support 4 and so far within the

bell shaped wheel disc that foreign matter will not travel towards said free end.

Application of the present invention is not restricted to farming machines of the tractor type; the construction according to the invention may be successfully used also for running wheels of other vehicles.

While I believe the above described embodiments of my invention to be preferred embodiments, I wish it to be understood that I do not desire to be limited to the exact details of design and construction shown and described, for obvious modifications will occur to a person skilled in the art.

ANTON LENTZ.

PUBLISHED
MAY 25, 1943.
BY A. P. C.

A. LENTZ
RUNNING WHEEL SUPPORT
Filed April 19, 1940

Serial No.
330,510

Fig. 1

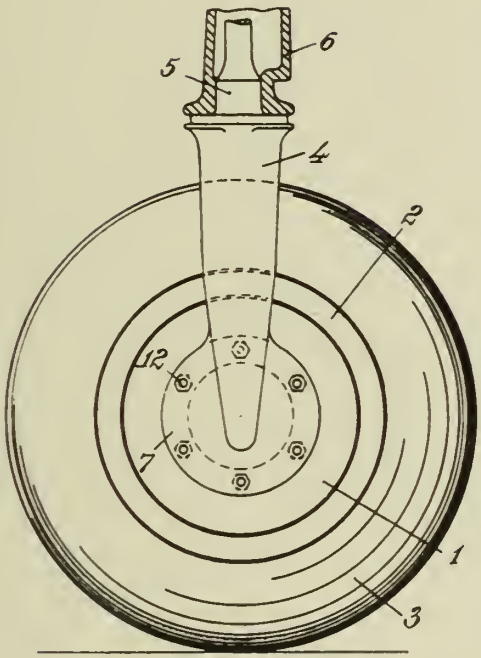

Fig. 2

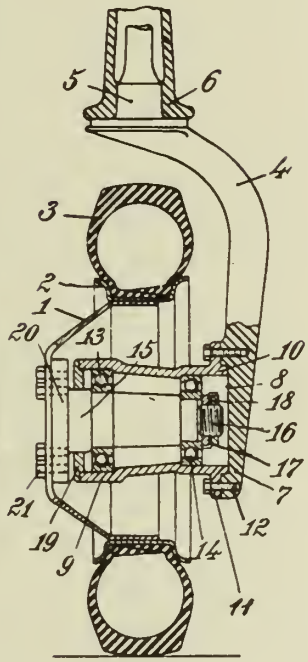

INVENTOR
ANTON LENTZ
by Karl A. Mayr
ATTORNEY

Published May 25, 1943

Serial No. 331,054

ALIEN PROPERTY CUSTODIAN

LIGHT SENSITIVE LAYERS

Paul Görlich, Dresden, Germany; vested in the Alien Property Custodian

Application filed April 22, 1940

The invention relates to improvements in light sensitive layers of the type described in my United States Patent No. 2,122,860 issued on the 5th day of July 1938 and particularly is directed to a novel employment and modification of this light sensitive layer.

According to my previous invention the light sensitive layer is used as a photo electric cathode in photo electric tubes and consists of a bismuth or antimony layer and a caesium or rubidium layer alloyed together. Such an alloyed light sensitive layer is extremely sensitive in the visible range of the spectrum and may be produced in thin and thick layers which are pervious and impervious to light respectively.

One object of the present invention is to employ the above mentioned alloyed light sensitive layer as secondary electron emitting means.

Another object of the invention is to apply the above mentioned alloyed layer to the electrodes from which the secondary electrodes are to be released.

It is also an object of the invention to employ the above mentioned alloyed layer in the shape of foils which preferably are mounted in spaced relation one after another so as to serve in an electron multiplier tube as secondary electron emitting electrodes.

Another object of the invention is to make the foils of such a thickness that the rear face of the foils produces a maximum emission of secondary electrons when the primary electrons strike the front face of the foils.

Still another object of the invention is to increase the light sensitiveness of the above mentioned alloyed layer by incorporating in the same additionally conductive particles of pure metal, for instance made of silver.

Another object of the invention is to produce an alloyed light sensitive layer of the above mentioned type in which the caesium or rubidium layer is substituted by a lithium layer. Lithium has the advantage that its thermic emission is very small so that its current in the dark zone of the spectrum is also very small. At the same time, however, the sensitiveness is greater than that of the light sensitive layers of the prior art. The incorporation of pure metallic particles, as silver, in the alloyed layers of antimony and lithium or bismuth and lithium increases the light sensitiveness still more.

The drawing illustrates diagrammatically various alloyed light sensitive layers and secondary electron emitting layers of the present invention:

Fig. 1 illustrates a self-supporting secondary electron emitting foil without any carrier.

Fig. 2 illustrates a secondary electron emitting layer applied to a carrier which serves as electrode.

Fig. 3 illustrates the arrangement of a plurality of foils as serving as secondary electron emitting electrodes in a secondary electron multiplier.

Fig. 4 illustrates an alloyed light sensitive layer with pure metallic particles on its surface.

Fig. 5 illustrates an alloyed light sensitive layer with pure metallic particles distributed throughout the entire body of the layer.

Fig. 6 illustrates the layer of Fig. 4 applied to a carrier of silver.

Fig. 7 illustrates an alloyed layer of antimony and lithium.

Fig. 8 illustrates an alloyed layer of antimony and lithium with pure metallic particles on its surface, and

Fig. 9 illustrates an alloyed layer of antimony and lithium with pure metallic particles distributed throughout the layer.

Fig. 1 illustrates an alloyed layer 1 composed of antimony and caesium, which according to my U. S. Patent No. 2,122,860 is produced by precipitating by evaporation a caesium layer upon an antimony layer, which latter was previously treated with oxygen, and then subjecting the two superposed layers to a special treatment, for instance a heat treatment, which causes the two layers to alloy together. The light sensitive layer so produced according to the present invention is used for secondary electron emitting purpose.

According to Fig. 2 the light sensitive layer 1 is applied to an electrode 2 which in a secondary electron multiplier is used for releasing secondary electrons, or as illustrated in Fig. 3, a number of the layers 1 is used preferably in the form of foils arranged in spaced relation, one after another, to serve as secondary electron emitting electrodes. The use of self-supporting foils has the advantage that the entire number of primary electrons is exploited, which is not possible when grids or mesh-works are employed as secondary electron emitting electrodes. It is advisable and forms an important part of the invention to make the foils of such a thickness that the secondary electrons obtained on the rear face of the foils is a maximum when the primary electrons strike the front face of the foils.

In order to increase the light sensitiveness of the above mentioned layers, and thereby increase also their value as secondary electron emitting medium, the present invention proposes to incor-

porate in the alloyed layer pure particles of a foreign metal. Silver has been found to be exceptionally useful for this purpose. The use of silver particles does not only increase the light sensitiveness of the layer, but also increases the electric conductivity of the layer in transverse direction.

The pure metallic particles may be incorporated in the alloyed layer in various manner. For instance, the alkali metal-bismuth alloy layer or the alkali metal-antimony alloy layer, as the case may be, is produced first and thereupon a coating of silver is precipitated by evaporation upon the alloy layer. The silver presumable enters by itself into the alloy layer, however, this action may be accelerated or enhanced by an additional heat treatment. A layer of this type is illustrated in Fig. 4 and is designated with **5**.

It is also possible to precipitate first the silver layer or another metallic layer upon the antimony layer or the bismuth layer and then apply the alkali metal layer, whereupon the alloy is produced by a heat treatment. In this manner a layer **6** as illustrated in Fig. 5 is obtained.

Fig. 6 illustrates the layer **5** arranged on a metallic carrier **7**, consisting for instance of silver. This last named arrangement is of advantage when the alloyed layer of the present invention is employed as secondary electron emitting electrodes, for it is to be suspected that the secondary electrons are released from the deep interior of the layer and that therefor any additional belated delivery of electrons is of importance.

In Fig. 7 an alloyed light sensitive layer **8** is illustrated in which the caesium or rubidium layer is substituted by lithium. When lithium is used the thermic emission is very small, so that only a very small current in the dark range of the spectrum is produced, since this current depends principally upon thermic emission. The current in the dark range of alloyed bismuth-lithium layers is about of the same size as the corresponding dark range current of hydrated potassium layers. At the same time, however, the alloyed bismuth-lithium layer has a higher light sensitiveness as the heretofore known layers.

If the sensitiveness of the layer **8** is to be increased, this can be done in similar manner as described in connection with the Figs. 4 and 5 by incorporating pure metallic particles, as for instance silver, in the alloy. According to Fig. 8 the surface of the antimony-lithium layer **9** has incorporated therein pure silver particles, while Fig. 9 illustrates an antimony-lithium layer **10** which has pure silver particles distributed throughout its entire body.

For the same reason as mentioned with reference to Fig. 6, the layer **9** or **10** may be applied to a metallic carrier, for instance of silver, to enhance the utility of the alloyed layer as secondary electron emitting substance.

Obviously, the alloyed antimony-lithium layer, with or without the pure metallic particles therein, may be employed in the form of self-supporting foils, as shown in Fig. 3, to serve as secondary electron emitters in secondary electron amplifiers.

Furthermore, the layers of the invention may also be used for thermic emission.

PAUL GÖRLICH.

PUBLISHED

MAY 25, 1943.

BY A. P. C.

P. GÖRLICH

LIGHT SENSITIVE LAYERS

Filed April 22, 1940

Serial No. 331,054

Fig. 1

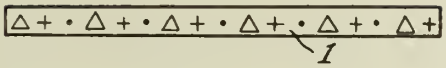

△ = Sb
+ = O
• = Cs

Fig. 2

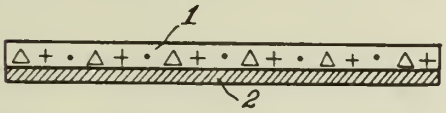

Fig. 3

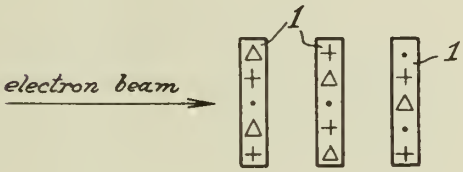

Fig. 4

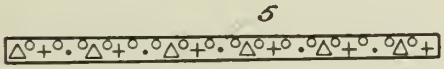

Fig. 5

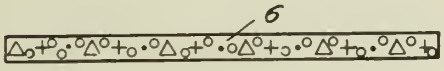

○ = Ag

Fig. 6

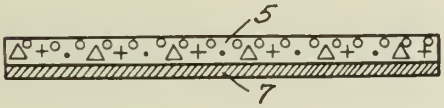

Fig. 7

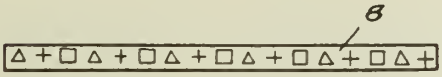

Fig. 8

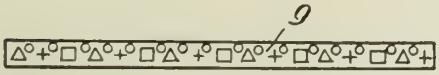

△ = Sb
+ = O
□ = Li
○ = Ag

Fig. 9

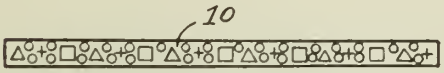

INVENTOR.
Paul Görlich
BY Singer, Ehlert, Stern & Carlberg
ATTORNEYS

Published May 25, 1943

Serial No. 333,240

ALIEN PROPERTY CUSTODIAN

POLYGONAL TANK

Hans Schmuckler, deceased, late of Berlin, Germany, by Walter Grimpe, executor, Berlin-Wilmersdorf, Germany; vested in the Alien Property Custodian

Application filed May 3, 1940

This invention relates to a polygonal tank or vessel comprising arched plates.

Hitherto, rectangular or polygonal tanks have been made, for instance, of flat sheet metal walls and reinorcing girder members. Tanks of this kind, owing to the low resistance moment of the sheet metal, require a plate thickness growing substantially from the upper edge of the tank towards the bottom. Moreover, the wall plates and, more particularly the bottom plates, which are exposed to the heaviest stress, had to be specially reinforced or stiffened by section iron, connected thereto, for instance, by riveting.

It is an important object of the present invention to provide a construction of a tank, saving material and simplifying transport and assemblage of its component parts.

Where arched sheets are used, the reinforcing section iron may be dispensed with. Moreover, owing to the elimination of the bending moments, the stress upon the arched plates is reduced to such an extent that the same plate thickness may be used from top to bottom of the tank.

Also, apart from the considerable savings in material, arched plates do not require any transverse seams, so that no caulking is required. The arched plates may be welded directly to the girders which take up the inner pressure acting upon the tank. In case of riveting, suitable riveting flanges may be provided on the arched plates.

While arched plates are thus very advantageous from some aspects, some difficulties are arising with regard to the corners of the tank, i. e., both at the vertical corner edges between two adjacent walls of the tank as well as at the horizontal corner edges between a side wall of the tank and its bottom.

Each arched plate is acting as a two joint arch, and the horizontal thrusts occurring therein are neutralizing each other in the inner sections.

It is an object of the present invention to provide means for taking up the unilateral horizontal thrusts set up in the corner points of the tank where the horizontal thrusts do not neutralize or balance each other.

With these and further objects in view, as may become apparent from the within disclosures, the invention consists not only in the structures herein pointed out and illustrated by the drawings, but includes further structures coming within the scope of what hereinafter may be claimed.

The character of the invention, however, may be best understood by reference to certain of its structural forms, as illustrated by the accompanying drawings in which:

Fig. 1 is a horizontal cross section through the corner of a polygonal tank, having the invention applied thereto.

Figs. 2 and 3 are similar sections of two modifications.

Fig. 4 is a perspective view of an arched or corner plate having the invention applied thereto, on an enlarged scale.

Fig. 5 is a cross section through a girder by which the interior pressure of the fluid in the tank is taken up.

Figs. 6, 8, and 9 are horizontal cross sections through the corner of further modifications of polygonal tanks.

Fig. 7 is a view of a detail.

Similar reference numerals denote similar parts in the different views.

For a better comprehension of the invention the same has been illustrated in connected with a rectangular water tank having a height of 9 meters.

As will be hereinafter shown, at the corner points of a polygonal tank consisting of arched plates, corner plates are provided in an oblique direction with respect to the walls of the tank, advantageously at an angle of 45°; said corner plates, together with corner girders, having particularly high bending strength and a higher resistance than the rest of the girders and being arranged obliquely to the walls, for taking up the outwardly directed components of load.

Referring now the drawings in greater detail, and first to Fig. 1, it will be noted that one side wall is formed of arched plates **1**, and a second side wall, extending at right angles thereto, is formed of arched plates **2**, while girders **4** and **5** are provided to take up the interior pressure of the fluid in the tank.

Corner plates **3** are provided at the corners A between the two side walls, advantageously at an angle of 45° with respect to said walls. In the embodiment of Fig. 1, said corner plates are also formed as arched plates and adapted to take up the outwardly directed components of the load, with the aid of stiffening members and corner girders **6** arranged in an oblique position with respect to the side walls. As will be seen from the parallelogram of forces indicated in Fig. 1, the forces H from the arched plates neutralize each other, while the forces H and H_1 are composed to a resultant R_1, that has to be taken up by the corner girders **6**, which to this end are

advantageously disposed in the direction of the resultant R_1, as shown in Fig. 1.

Referring now to the embodiment shown in Fig. 2, it will be seen that the corner plate is in this case formed as a plane sheet **7**, which, as will be understood, has to be reinforced by members taking up the forces acting in the direction of its plane and at right angles thereto. It will be noted from the resultant R_2, amounting to 51.5 tons, as compared to the resultant R_1 of 55 tons in Fig. 1, that the force set up in this case is lower, which means an advantage of this design over the construction of Fig. 1.

The girders **8** at the corner, Fig. 2 might be disposed in the direction of the resultant R_2, but for constructional reasons they will be preferably arranged perpendicularly to the plane of sheet **7**, as shown in the drawing. As indicated by the analysis of forces in Fig. 2, only 49,5 tons are acting upon a girder which is so disposed, as against 55 tons in Fig. 1.

A very advantageous embodiment is shown in Fig. 3, comprising a plane corner plate **9** having a substantially smaller width than the arched plates or the sheet **7** of Fig. 2. As indicated by the diagram of forces, Fig. 3, the resultant in this case is much less than in the embodiments of Figs. 1 and 2, namely 45,5 tons only. As a result, the forces acting upon the corner girders **10**, Fig. 3, amounting to 42,5 tons only, are less than the forces acting upon the corner girders **8**, Fig. 2.

In the embodiment of Fig. 6, the corner plate **3** is formed as an arched plate, and stiffened by means of a special girder **17** extending over the whole width of the corner plate.

Fig. 7 shows by way of example the construction of the girder in the form of a lattice girder.

In the embodiment shown in Fig. 8, the corner plate is relieved by the provision of a girder **18** on the side wall plates **2** adjacent to the corner plate **3**, while in the construction shown in Fig. 9, the corner plate **3** is relieved by the provision of girders **19** extending to the corner point A.

According to a preferred form of the invention, the arched plates of the side walls and, if desired, also the corner plates **3**, **7** or **9**, resp., may be reinforced or stiffened by means of ribs **11**, Fig. 4, formed of the material by a pressing operation and tapering at the marginal regions **12** of the sheets.

According to a further feature of the invention, the girders **4**, **5**, **6** and **8** and **10** which take up the interior pressure of the fluid in the container are T-shaped in cross section, as shown by the two members **14** and **15**, Fig. 5, which are welded together at **13**. This T-profile together with the adjacent strips **16** of the sheets **1**, **2**, **3** of the walls which are not stressed statically forms a double-T-girder.

The invention has been described above with reference to polygonal tanks made of sheets and girders of iron, but it should be noted that the invention applies to tanks of concrete or reinforced concrete material as well.

The present invention renders it practically possible to produce barrel-shaped tanks, more particularly, of larger dimensions, which so far, probably owing to the difficulties involved in the construction of the corners, did not find practical application.

Compared to the tanks now used in practice the novel tanks made in accordance with the present invention offer the following advantages:

1. Considerable savings of material owing to reduced wall thickness of the sheets. A calculation on a practical example has proved a reduction of 60% material, as compared to a tank made of flat sheets.

2. Considrable savings in freight, owing to the fact that the sheets, as a result of the avoidance of the joints, may be shipped in full length directly from the roller mill to the building site.

3. Simplified assemblage and erection.

4. Better appearance compared to round tanks, especially where the smooth surfaces **7**, or **9**, resp., are provided between the arched plates, in accordance with Figs. 2 and 3.

The method and apparatus of the present invention have been described in detail with reference to specific embodiments. It is to be understood, however, that the invention is not limited by such specific reference but is broader in scope and capable of other embodiments than those specifically described and illustrated in the drawing.

WALTER GRIMPE.

PUBLISHED
MAY 25, 1943.
BY A. P. C.

H. SCHMUCKLER
POLYGONAL TANK
Filed May 3, 1940

Serial No.
333,240
2 Sheets-Sheet 1

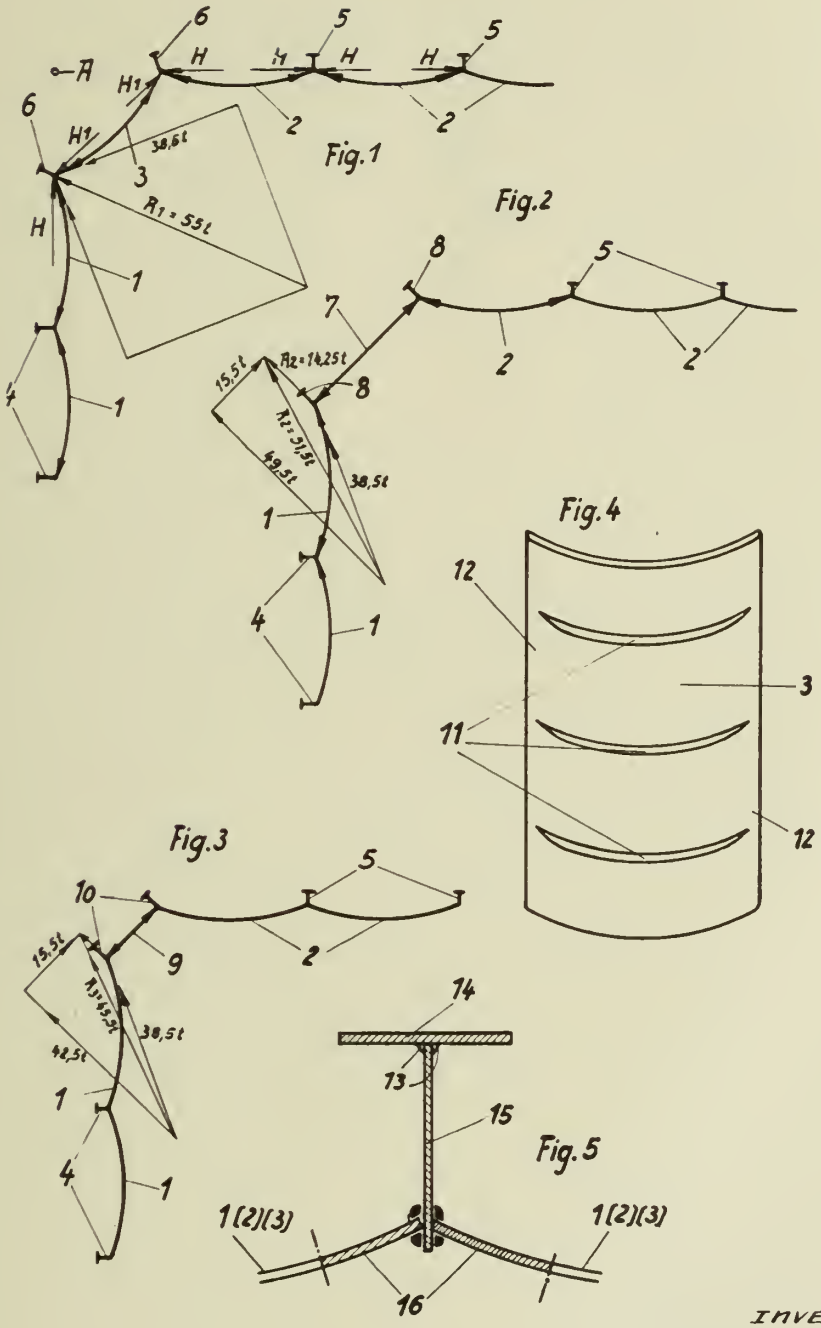

INVENTOR
Hans Schmuckler Deceased,
Walter Grimpe Executor,

BY Bailey & Parson
ATTORNEYS

PUBLISHED
MAY 25, 1943.
BY A. P. C.

H. SCHMUCKLER
POLYGONAL TANK
Filed May 3, 1940

Serial No.
333,240
2 Sheets-Sheet 2

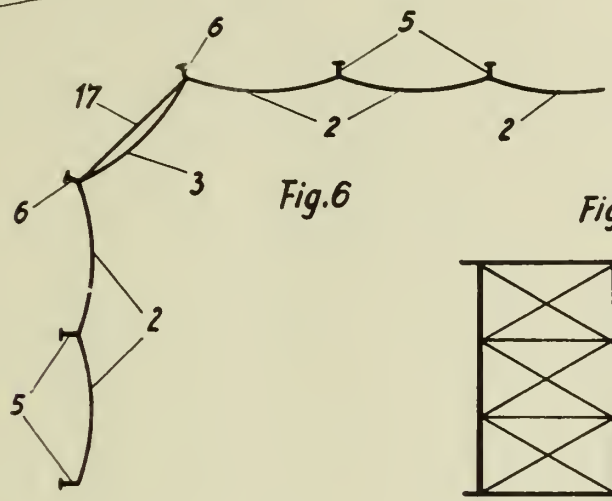

Fig.6

Fig.7

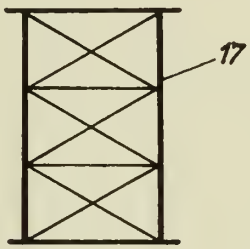

Fig.8

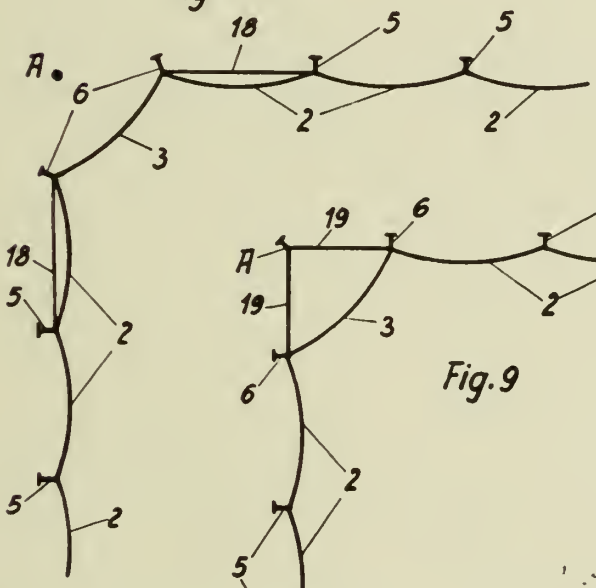

Fig.9

Inventor
Hans Schmuckler Deceased,
Walter Grimpe Executor,

BY Bailey & Harson
Attorneys

Published May 25, 1943

Serial No. 333,243

ALIEN PROPERTY CUSTODIAN

BAG WITH INSOLUBLE, AUTOMATIC FOLD CLOSING

Adolf Rambold, Dresden, Germany; vested in the Alien Property Custodian

Application filed May 3, 1940

The present invention relates to folded bags of all types made by folding a blank of material of rectangular design over a core, preferably in such a manner that the bags comprise a smooth continuous bottom, several smooth continuous sides and two opposite continuous sides, which are closed and formed by folding adjacent edges of the blank of material, whereby said edges of the blank of material are folded together several times over and over in known manner. Triangular portions projecting beyond the bottom are formed thereby, or, in order to avoid said triangular portions, it is necessary to locate the bottom edge portions which project beyond the base area proper between the side edges in such a manner that the edges of the projecting bottom edge portions are retained near the longitudinal side edges of the blank of material and are folded therewith. Bags formed in this way, the folded seams of which are produced in the manner described, are completely tight. However, it is necessary to positively secure these folded seams in position, either by means of stapling with metal staples or by means of sealing the material, as for example, the sealing of waxed paper through the application of heat, or by means of glue. The object of the present invention is to eliminate the necessity of all such methods of sealing.

Heretofore it has been known that a sewn bag of cloth may be turned inside out after sewing in order to improve its appearance. My invention provides for improved appearance in a bag which is held together after folding and without any additional aids.

The invention consists in a method of producing a bag as well as in the bag itself.

My invention substantially simplifies methods heretofore known. The invention comprises turning the folded bag with the side closing folds, which is formed over a core, inside out after folding. A hollow core is preferably utilized which makes it possible to form the bag in a single operation by folding the blank of material on the outside around the hollow core, and after folding, to pull the bottom of the bag through the hollow core by means of a plunger which is applied to the bottom and to turn the bag thereby. The projecting triangular portions formed in the first mentioned folding of the side folds, which must be turned down on the bottom of the bag before it is turned inside out, are brought into the inside of the bag by means of turning the bag inside out with the result that the bag remains completely closed in itself without any additional aids merely through the folding of its side folded seams. When the projecting bottom portions are located between the continuous sides and folded therewith, the turning inside out causes the triangular portion connecting the folded bottom portion with the bottom to be turned on the outside by means of turning the bag inside out and secures the longitudinal side folded seam in position at the lower end of the bag.

The bag is particularly intended for use preferably as an infusion bag for tea, coffee and so forth but other uses will readily suggest themselves. Such bags can be used as sales packages as well as infusion bags. For the latter purpose the bags may be made for example of a suitable material, such as filter paper or perforated Cellophane or cloth. The top closing of said bags can be effected in known manner by means of folding and clamping with staples or by means of sealing the material. In the case of infusion bags, a string holder with a tag is applied simultaneously with the stapling.

The position of the folded seams bears no relation to the invention and may be arranged as desired.

Two examples are shown in their individual steps of development in the accompanying drawings.

Figures 1, 2, 3 and 4 are perspective illustrations showing the progressive steps in the manufacture of the bag out of a rectangular blank sheet of material over a core of rectangular cross section, on the narrow sides of which side closing folds of the bag being produced are formed, whereby triangular portions result; Fig. 5 shows how the bag formed over the core is drawn through the hollow core by means of a plunger and thereby turned; Fig. 6 illustrates on an enlarged scale the operation step according to Fig. 5, whereby the core and the piece of work are illustrated opened up; Fig. 7 shows the bag formed according to Figs. 1–6, completed and turned inside out; Fig. 8 shows the bag according to Fig. 7, filled and provided with a top closing; Figs. 1, 9, 10 and 11 illustrate the progressive steps in the forming of a bag with a differently formed side edge folding; Fig. 12 shows a further method of forming the top closure for a bag; Fig. 13 shows the finished bag turned inside out, made according to Figs. 1, 9, 10, 11, 5 and 12; and Fig. 14 illustrates the bag of Fig. 13 filled and provided with a top closing.

The bags according to Figs. 8 and 14 are illustrated, for example, as infusion bags, but they may also be used as sales packages as well. The

ratio of their dimensions may be as desired and the drawings are not intended to limit my invention either as to proportions or sizes. In manufacturing the bag, as illustrated by Fig. 1, a rectangular blank sheet of material is utilized which is folded in U-fashion in any suitable manner over a core of rectangular cross section. A hollow core is preferably used for making the bags. The core is indicated by reference character 1. Its inner edges are preferably rounded off, as shown for example in Fig. 6 at 100 and 101, in order to facilitate the drawing through of the bag formed over it as hereinafter described. The bottom of the bag is indicated by reference numeral 2. Additional portions of the bag extending from the bottom and projecting beyond the narrow sides of the core 1 are indicated by reference numerals 3 and 4, whereas the portions of the blank of material turned downward are indicated by 5 and 6. The edges of the U-shaped folded blank of material (Fig. 1) are pressed together on both opposite sides and in such a manner that the lateral portions 9 and 10, extending from the center plane of the core, project from the edges 7 and 8 of said core 1 and extend parallel to the sides 5 and 6 (Fig. 2). Said lateral portions 9 and 10 are folded together several times over and over, in the present example twice (Fig. 3), and are folded over into the narrow side plane of the core 1. As Fig. 3 also shows, the portions 11 projecting beyond the bottom 2 are formed thereby, which are folded over on the bottom as shown in Fig. 4. The plunger 12 then begins to function and is moved in the direction of the arrow toward the bottom 2, and is applied to the bottom and is thrust through the hollow core 1. The finished side folds designated by reference numeral 13 are thereby prevented, for example, by means of indicated springs 14 from opening during the process of drawing through. As Fig. 6 shows, the portions 11, i. e. the projecting triangular portions are brought into the inside of the bag with the result that the bag remains closed without any additional aids simply by means of its side folds.

Fig. 7 shows the finished bag. Fig. 8 shows said bag after being filled and after its top has been closed in any suitable manner. A staple 15 secures the top closing and serves at the same time to fasten a holder string 16 with tag 17.

Beginning with Fig. 1, the forming of the side folds according to Fig. 9 comprises thrusting the portions 3 and 4, projecting beyond the bottom 2, between the lateral portions 9 and 10 in such a manner that the edge 18 is retained near the longitudinal edges of said lateral portions so that when said lateral portions 9 and 10 are folded several times, said portions 3 and 4 are folded therewith, as shown in Fig. 1. In the present example the fold is effected twice. The finished folded bag thus formed is shown in Fig. 11. The folds are indicated herein by reference numeral 19. If the projecting bottom portions 3 and 4 are thrust between the lateral portions 9 and 10 and folded therewith, the turning inside out illustrated in Fig. 5 results in the triangular portion 20, connecting said folded bottom portion with the bottom, being turned on the outside on both sides by means of turning the bag, as shown clearly in Fig. 13. This secures the longitudinal side folded seam 19 in position at the lower end of the bag. It is also important that the edge 21 of the fold 19, which, as is shown in Fig. 11, is on the outer edge, be brought to the inside, whereas the inner folded edge 22 located in the middle is turned on the outside and is retained in the middle of the finished bag for locating in respect to the edges 7 and 8 of the core 1 and in closing the bag, as Fig. 14 shows, is brought outwardly further toward the inside.

The top closing—usually a fold closing—can be sealed or stapled in known manner. The top closing also serves to increase the securing of the side folds for which gluing or stapling have heretofore been required.

ADOLF RAMBOLD.

PUBLISHED MAY 25, 1943. BY A. P. C.

A. RAMBOLD

BAG WITH INSOLUBLE, AUTOMATIC FOLD CLOSING

Filed May 3, 1940

Serial No. 333,243

2 Sheets-Sheet 1

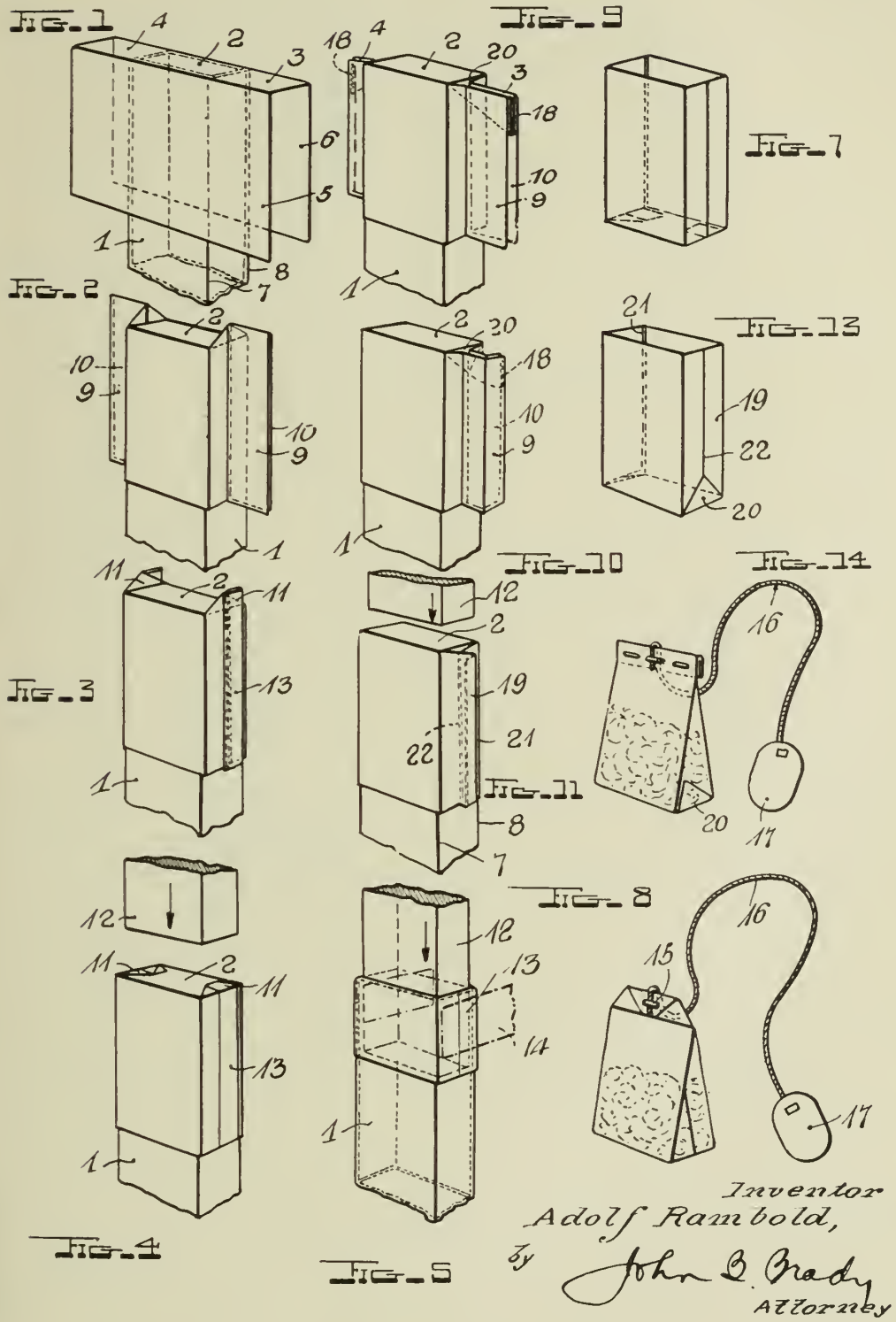

Inventor
Adolf Rambold,
By John B. Brady
Attorney

PUBLISHED

MAY 25, 1943.

BY A. P. C.

A. RAMBOLD

BAG WITH INSOLUBLE, AUTOMATIC FOLD CLOSING

Filed May 3, 1940

Serial No. 333,243

2 Sheets-Sheet 2

FIG. 12

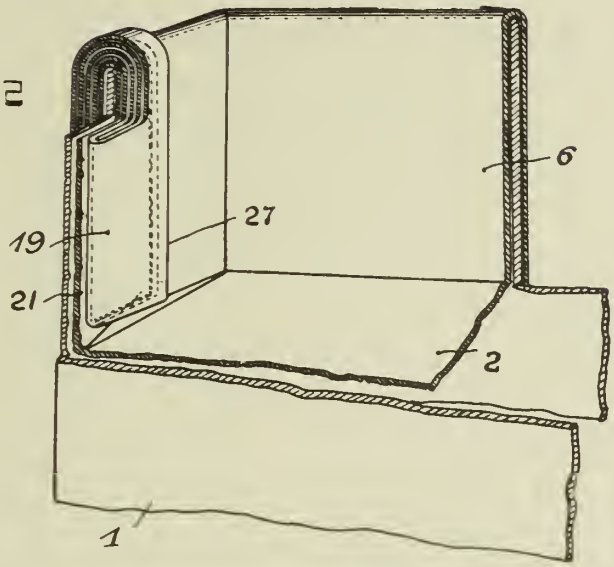

FIG. 6

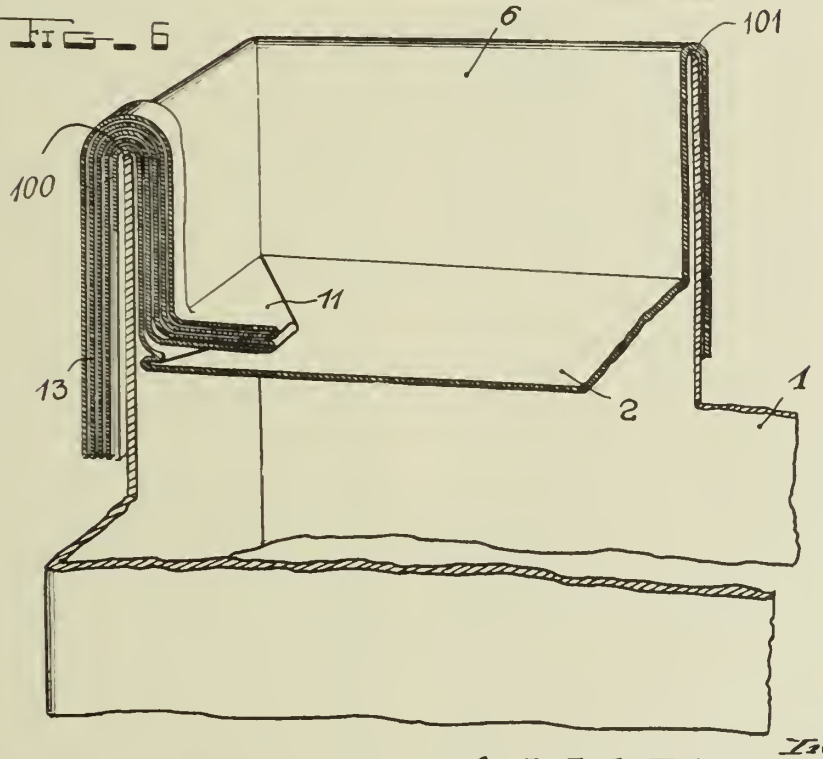

Inventor

Adolf Rambold,

By

John Q. Brady

Attorney

Published May 25, 1943

Serial No. 334,552

ALIEN PROPERTY CUSTODIAN

CATHODE RAY TUBE

Wilhelm Riedel and Kurt Heinz Graefe, Berlin, Germany; vested in the Alien Property Custodian

Application filed May 11, 1940

In assembling the electrode system of a cathode ray tube, more particularly such as is used for oscillographic and television purposes, special care must be taken that the single system elements are maintained in their correct position with respect to one another even after their being fitted in the tube body and heated for the purpose of degassing. This condition can be fulfilled when the stresses to which the elements are exposed during the sequence of operation are as small as possible. Electrode systems of the kind in which the electrodes are fixed to clips by a spot welding process and the clips are secured to insulating supports do not admit a sufficiently unstressed assembly. Each welding spot gives rise to stresses within the system which are again relieved by the heating and thus are able to cause the system elements to shift with respect to one another.

It is an object of the invention to provide a method for manufacturing the electrode assembly of a cathode ray tube whereby an invariable position of the electrodes during the whole process of manufacture is safely obtained.

It is a further object of the invention to provide a cathode ray tube in which some or all of the system elements are fixed to holders composed of insulating, more particularly ceramic material by cementation.

Another object of the invention is to provide special centering means for adjusting the position of the elements of the electrode system with respect to one another.

A further object of the invention is the combination of mechanical and optical centering means for the just mentioned adjusting purposes.

The invention will be better understood with the aid of, and further features of the invention will be apparent from the following more detailed description and the accompanying drawings, of which in a purely diagrammatic fashion and by way of example.

Fig. 1 shows a cross-section of a simple cathode ray tube system provided with means for securing the position of the electrodes with respect to one another,

Fig. 2 is a perspective view of a system according to Fig. 1,

Fig. 3 shows in cross-section an arrangement for centering the electrode system of a cathode ray tube,

Fig. 4 is a longitudinal cross-section of a modification of the holding and clamping device according to the invention, while

Fig. 5 shows a view taken from the left side of plane B—B of the device illustrated by Fig. 4, and

Fig. 6 shows a view taken from the left side of plane A—A of the device illustrated by Fig. 4, and

Fig. 7 illustrates a centering means for adjusting the position of the cathode with respect to its support and with respect to the control electrode.

As illustrated by Fig. 1, the single elements of the electrode system, for example the cylinder **2** which is adapted to support the cathode and, in a tube for television purposes, also the control grid, the anode diaphragm **3**, the electro-static lens electrodes **4** and **5** as well as the deflecting plates **6** and **7**, are fixed to two or more supporting members **1**, preferably rods, which consist of insulating, more particularly ceramic material, by cementing them into notches **8** of the supports **1**.

This manner of fastening the elements of the electrode system, besides the possibility of holding the elements perfectly without any stress, involves the further advantage that by suitable means the single electrodes can be centered with respect to a prescribed axis in a simple way.

When the demands on the accuracy of the system assembly are not too high, the system can be centered, as shown in Figs. 1 and 2, by slipping the single electrodes over a rod shaped centering means **9** the axis of which coincides with the axis of the system, and by defining the distanec of the elements from one another with the aid of spacing members **10** interposed between the structural elements of the assembly. The rod **9** may be threaded at its ends and thus allow the entire system to be thrusted together by means of nuts.

In manufacturing the electrode assembly, the notches **8** of the insulating supports **1** are filled with a suitable cementing material into which are pressed the system elements or the flanges of such elements which may be provided for this purpose. During the drying process the insulating supports are held in their correct position by means of clamps **11**.

If a high accuracy of the assembly is required, there is applied an optical method for centering the electrodes.

The means which are provided according to the invention for performing a centering method of this kind are illustrated by Figs. 3–7.

Fig. 3 shows a stable base **19** carrying a telescope **13** adapted to be shifted along a slide **12**,

as well as a support 14 which is carefully positioned with respect to the axis of the telescope. A suitable system element, e. g. the cylindrical patr of element 4 of the electrode system according to Fig. 1, is supported by this means.

The support 14 is united with a holding means which is so designed as to admit the single system elements to be adjusted independently. For this purpose e. g. may serve a metal piece 15 which is indented, preferably by milling, in the form of a crest. The single electrodes are put into the indentations 17 and held in the notches by cramping means, e. g. small springs 18, so that they cannot be displaced too easily. The holding means may be composed of two parts as illustrated in Fig. 3.

A modification of the centering means of the kind described is illustrated in detail by Figs. 4–6. The clamping device of the arrangement according to Fig. 4 comprises a plurality of spacing elements 21 which are positioned to have the correct distances from one another. The distances are secured by intermediate rings 22 (not shown in Fig. 4). Elements 21 and 22 are connected with one another and with the supporting element 14 by means of bolts 20. Tongue-shaped elements 23 which are capable of being turned round an axis are mounted between the rings 22 as shown in Fig. 6. The electrodes are pressed against the spacing elements 21 by means of the tongues 23 which are moved with the aid of wedges 25. The pressing position of a tongue 23 is illustrated in Fig. 4 with regard to electrode 24. The wedges are fastened to the spacing elements 21 and are supported by means of pivots 26. By moving the adjacent wedges 25 the tongues are pressed against the electrodes. To admit the position of the electrodes to be adjusted during the assembling process the pressure exerted by the wedges 25 is too strong. Therefore the tongues are provisionally pushed into the desired position by means of springs 27 without the aid of the wedges 25 in order to obtain a lower pressure of the tongues before the position of the electrodes is finally fixed. As soon as all of the system elements are definitely centered the wedges are brought into their pressing position and by the way prevent the electrodes safely from being displaced when the electrodes are fixed to the supporting members 1.

The position of the tubular member 2 of Fig. 4 can be adjusted by means of a cylindrical element 31 which is slipped into the interior of member 2. The apertures 32 and 33 of the auxiliary element 31 permit a correct centering of the front and rear edges of cylinder 2.

The supporting members 1 are provided with notches as shown in Figs. 1 and 2, and the ring-shaped system elements, or the additionally provided ring-shaped supporting parts of the system elements, are cemented in the notches of the supporting rods 1.

A cylindrical electrode, such as 35 in Fig. 4, can be fixed to the supporting members by means of small angles 28 which are welded to the tube 35 as may be seen from Fig. 5.

Deflecting plates may also be fastened in the just described way. Their position can be adjusted with the aid of an auxiliary spacing element having a central opening substantially as described in connection with elements 6 and 7 of Figs. 1 and 2, and element 2 of Fig. 4. The plates can be supported by hooks 16 which are welded to the plates and cemented in notches of the supports 1.

As already mentioned in connection with Fig. 3, the centering means may consist of two parts. Both parts are united by means of cheeks 34 and bolts 36 as illustrated by Figs. 4 and 6. The upper part of the centering means may be provided with pushing bolts 29 and springs 30 as shown in Fig. 5, for pressing the cylindrical element 35 against the support 14.

The ocular of the telescope 13 suitably is provided with a measuring plate bearing a reticule and a plurality of rings engraved concentrically with respect to the centre of the reticule. During the centering process the optical centering means is so adjusted as to successively produce sharp images of the apertures of the single electrodes.

In the above described way it is possible to adjust the position of each electrode in such a manner that its aperture is exactly concentric with respect to the axis of the electrode system and to fix this position by the clamping means. After the adjustment of the electrodes, the insulating supports 1 having their notches filled with cementing material are applied to the system and held fast by means of special clamps.

The advantage of the described method and arrangement for assembling the electrode system of a cathode ray tube lies in the fact that during the manufacturing process no stresses whatever can be caused in the system or its several parts either by the centering and spacing means or during the cementation process. The method according to the invention for adjusting the position of the electrodes with respect to one another by the combination of optical and mechanical centering means, of course, admits of various modifications. Thus, for instance, it is possible to control the centering of the system elements by reproducing their apertures with the aid of a light ray sent through the system instead of doing so by inspecting the apertures directly through a telescope.

The method of controlling the correct position of the several system elements by optical means is not limited to being applied only to those electrodes which are fixed directly on the insulating supports.

In certain embodiments of cathode ray tubes to which the invention relates, the cathode ray producing system, for example, especially the cathode and the heating device, is passed into a supporting element such as cylinder 2 of Fig. 1.

It has been found particularly advantageous to perform the centering of the emissive surface of the cathode and, according as the case may be, also of the control grid with respect to the supporting cylinder with the aid of optical means.

For this purpose there is required a centering means which has the dimensions of the cylinder 2 of Fig. 1 or of another suitable system element and which is rigidly united with an optical instrument.

Fig. 7, by way of example, illustrates an arrangement of this kind. A microscope 47 bears a ring-shaped support 46 which is carefully positioned with respect to the axis of tube 45 supporting the ocular of the microscope. The inner diameter of the support 46 corresponds to the inner diameter of cylinder 2 of Fig. 1. The cathode 38 is mounted within a cylinder 37 bearing at its one end the control diaphragm 43 by means of supporting elements 40 and 41 sealed in an insulating piece 33.

The cylinder 37 is passed into the support 46. Then the emissive surface 44 of the cathode 38

can be centered with respect to the axis of the system and with respect to the aperture of the control grid by viewing the cathode through the grid with the aid of the microscope.

According to a modification of the just described cathode system the control diaphragm is mounted within and near the right hand end of cylinder **2** of Fig. 1. The cathode is supported by a preferably ring-shaped insulating member and slipped into element **2**. The centering of this modified arrangement can also be performed by means as described in connection with Fig. 7. In this case, element **37/43** corresponds in its size to element **2** and is firmly connected with a support **46**.

In a similar way, more generally, several other groups of system elements can be assembled and adjusted to form a number of structural units each of which is irreproachably centered in itself, before they are associated with the other system elements which are united and adjusted with respect to their mutual position with the aid of the before described centering means.

After all system elements which are fixed directly to the supporting members **1** have been secured by cementation to, say, four rod-shaped insulating supports, the auxiliary centering and spacing means are removed, the cathode assembly comprising the heating elements is passed into the supporting cylinder, other groups of system elements which possibly have been assembled before with the aid of separate centering means are brought into their correct position with respect to their supporting members, and the system is sealed into the tube vessel.

The entire electrode assembly may be supported within the tube by means of flat ring-shaped elements consisting of mica or phosphor bronze or another suitable material, the outer edges of which are indented or provided with springs for obtaining that the system is supported in an elastic manner by the tube wall.

The cementing material which is used according to the invention must satisfy certain conditions, viz.:

They must be perfectly vacuum-proof, i. e. no gas must be liberated even at high temperatures.

They must stick safely to insulating material as well as to metal,

They must be able to withstand high temperatures without change and without losing their adhesive properties. Cements of the desired kind can be obtained by mixing up together talc, powdered fire-clay, or similar vacuum-proof insulating material, with water-glass.

WILHELM RIEDEL.
KURT HEINZ GRAEFE.

PUBLISHED
MAY 25, 1943.
BY A. P. C.

W. RIEDEL ET AL
CATHODE RAY TUBE
Filed May 11, 1940

Serial No.
334,552
2 Sheets-Sheet 1

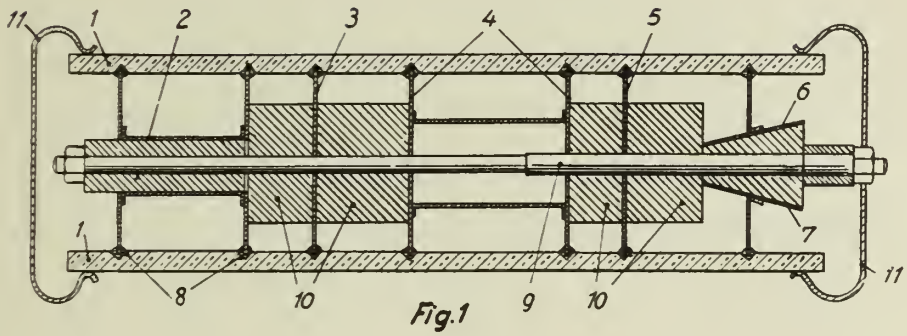

Fig.1

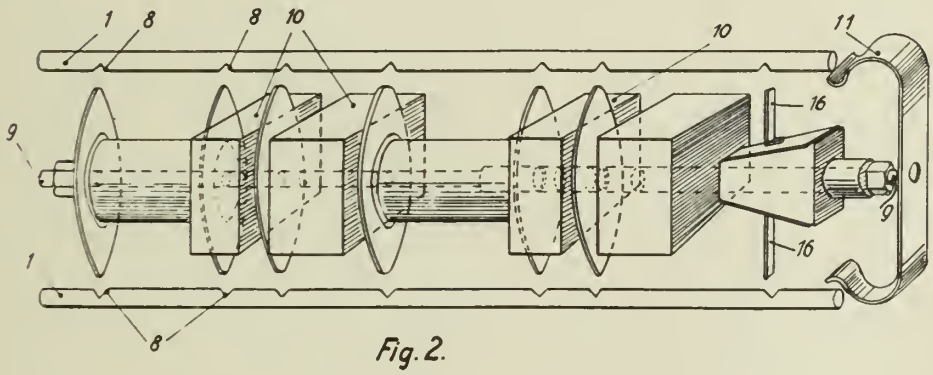

Fig.2.

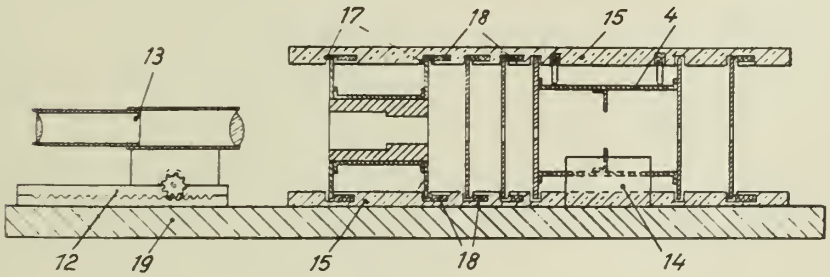

Fig.3.

Inventors:
Wilhelm Riedel
Hans [illegible]

PUBLISHED
MAY 25, 1943.
BY A. P. C.

W. RIEDEL ET AL
CATHODE RAY TUBE
Filed May 11, 1940

Serial No.
334,552
2 Sheets-Sheet 2

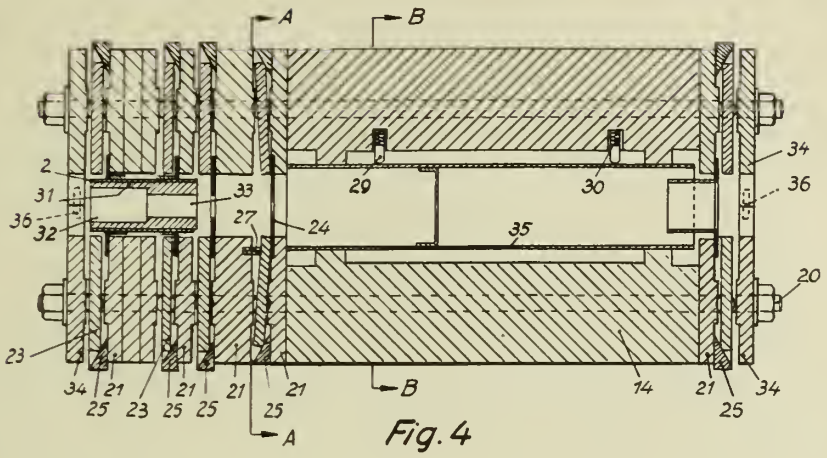

Fig. 4

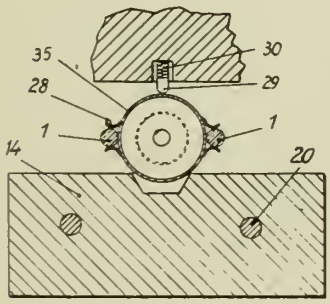

Fig. 5

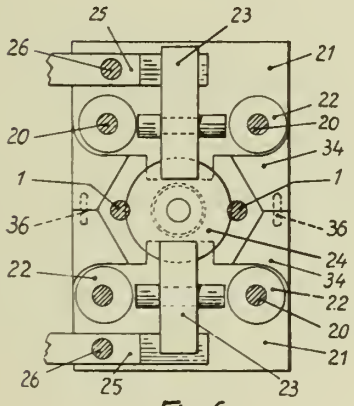

Fig. 6

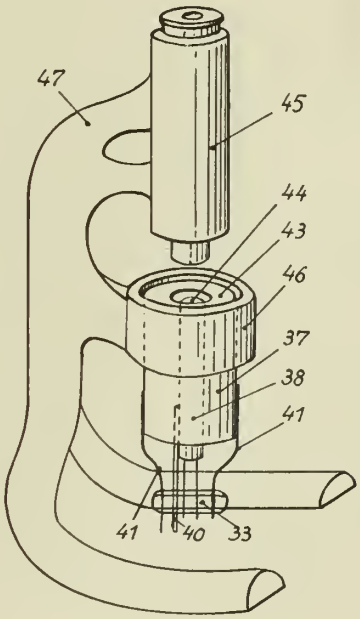

Fig. 7

Inventors:
Wilhelm Riedel
Rudolf Graefe

Published May 25, 1943

Serial No. 334,676

ALIEN PROPERTY CUSTODIAN

TRICKLE COOLERS

Ernst Nanz, Bretten, Germany; vested in the Alien Property Custodian

Application filed May 11, 1940

This invention relates to trickle coolers fitted with movable cooling elements.

Coolers of this class are open to the serious objection that, in view of the mobility of the cooling elements, it has not been possible hitherto to provide a tightly sealing connection of the pipes carrying the cooling medium with the supply and discharge conduits of the cooler. The use of stuffing boxes or hose connections has not given satisfaction, since it involves considerable disadvantages.

It is the object of the invention to provide a pipe connection which insures reliable sealing, does not interfere with the mobility of the cooling elements and can be easily and quickly attached. Furthermore, its construction may be such that sealing pressure automatically increases with the pressure of the cooling medium and thereby prevents leakage.

The invention attains its object by employing as connecting and sealing means an elastic hose member at the point where the pipe for the cooling medium enters the conduits of the cooler, which member continually presses against the pipe while still permitting rotation thereof. The hose member is further suitably united with the top wall of the supply or discharge conduit.

In order to insure tight sealing in case of higher pressure of the cooling medium the hose member is so arranged that its lower end is freely exposed and the cooling medium can therefore press against the outer surface thereof, the sealing effect of the cooling medium increasing with its pressure and excluding any risk of leakage.

Thorough sealing at the top wall of the supply and discharge conduit is effected by pushing the upper end of the hose member over a thickened portion of the pipe for the cooling medium, so that it is offset all around.

The invention is illustrated by way of example in the accompanying drawing, in which

Figures 1 and 2 are, respectively, a side and top view of a trickle cooler embodying the invention;

Fig. 3, is a diagrammatic front view of the slewing point of a cooling element; and

Fig. 4, a front view, with the lower part in axial section, of a special construction of the slewing point.

The cooler with the cooling elements *a* of movable type is of known design. The cooling elements *a* are movably disposed with their angular pipes *b* for the cooling medium at a frame *c* of the cooler and dip into the discharge conduit *d* and the supply conduit *e*.

According to the invention, a sealing movable connection of the pipe *b* with the top wall *f* of the conduits *d*, *e* is established by an elastic hose member *g* which tightly bears against the pipe *b* which nevertheless can turn therein. The member *g* is tightly pressed also against the top wall of the conduits *d*, *e*.

The arrangement as shown may be such that the cooling medium presses from the outside against the member *g*, particularly the lower portion thereof, and thereby has a sealing effect which will increase with the pressure of the medium. The arrows in Fig. 4 indicate this effect.

Fig. 4 shows a construction in which the pipe *b* is surrounded by a body *h* over which the upper part of the hose member *g* is drawn so that an offset portion *i* is formed permitting tight bearing against the wall *f* of the conduits *d*, *e*.

ERNST NANZ.

PUBLISHED

MAY 25, 1943.

BY A. P. C.

E. NANZ

TRICKLE COOLERS

Filed May 11, 1940

Serial No.

334,676

Fig. 1.

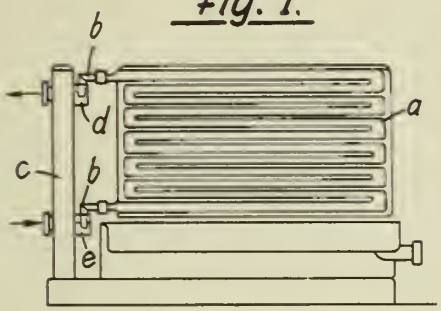

Fig. 2.

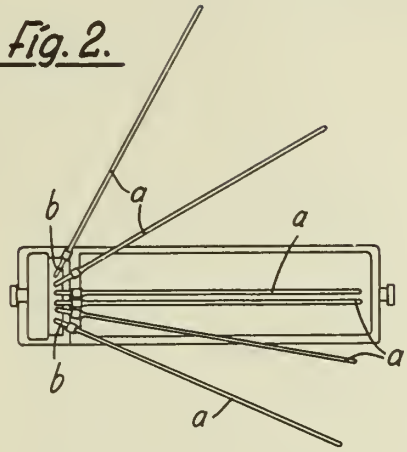

Fig. 3.

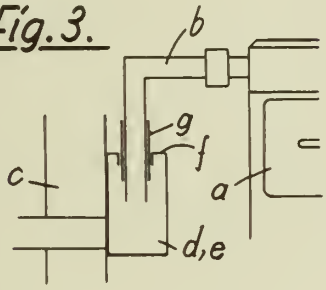

Fig. 4.

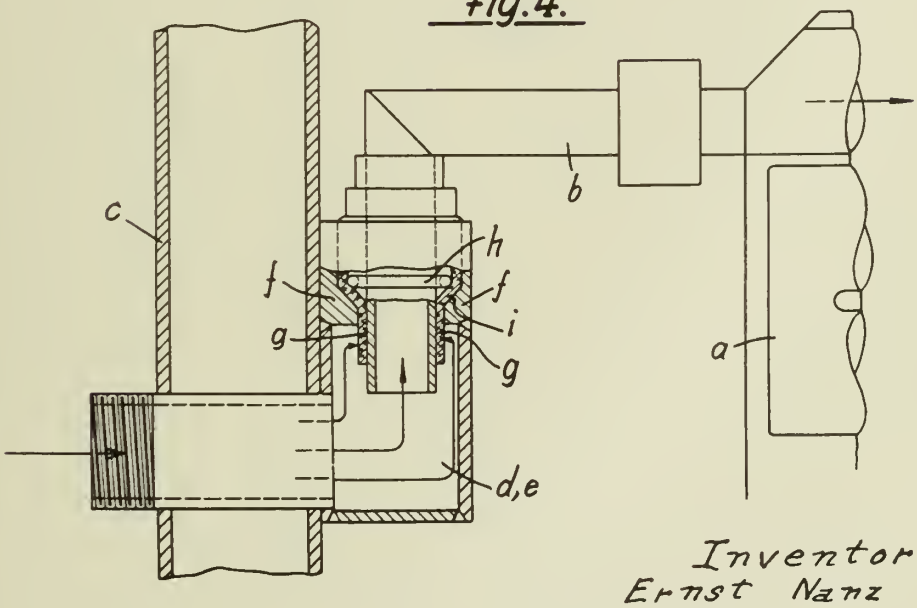

Inventor:
Ernst Nanz

By
Young, Emery & Thompson
Attorneys

Published May 25, 1943

Serial No. 335,177

ALIEN PROPERTY CUSTODIAN

VEHICLE OR LIGHT LAMP

Aroldo Chiti, Turin Italy; vested in the Alien Property Custodian

Application filed May 14, 1940

This invention has for its object a vehicle lamp more particularly adapted for motor vehicles, mechanised troop transports and signalling apparatus. This new lamp is characterised in that it sends out a light beam from which the passive rays issuing from the lamp filament and the defectively reflected rays from the reflecting surface have been intercepted by means of screens thus fully eliminating the halo incident in an upward direction, which, as it is well known, is the chief cause of diffusion and luminous reverberation produced by the fog and interfering with visibility. The means for carrying out the invention and the optical features of the device permit moreover to so adjust the filtering capacity as to limit the issuing light beam to a horizontal plane thus obtaining a perfectly anti-dazzling light when observed from above the optical axis of the vehicle lamp, the latter being parallel to the road plane. The lighting efficiency of the lamp is not thereby reduced and the light is thrown to a greater distance. It is moreover possible to intercept and limit the rays also in the opposite direction, or downwards, thus excluding illumination of the ground. The light is sent out in the form of a luminous fan-like blade limited to its incidence path. This feature is of high importance in mechanised troop transports as it permits concealment thereof. In fact if the vehicles are looked at from a point above the lamp, no direct ray, or rays reflected by the ground, attains the observer's eye. The section of the beam sent out through a double screen appears sharply and in a rectangular form, which may be reduced to the form of a luminous blade; it is however also possible to obtain a beam of circular, triangular or other section to suit particular requirements.

A feature of the invention consists in that the light issuing from the source is concentrated in a focal caustic before emerging from the vehicle lamp, means being provided in said focal caustic for intercepting or anyhow deviating wholly or in part the rays which do not pass through the geometric focus of the reflecting device.

Other details concerning the invention will appear from the following specification and reference to the annexed drawings which show diagrammatically and by way of example some embodiments of the invention.

In the annexed drawings, Figures 1 and 2 are an axial section and a cross section in reduced scale on line II—II of Fig. 1 of an embodiment of the invention; the dotted lines in Fig. 1 show a modified construction of the reflector;

Fig. 3 shows a modified construction of the vehicle lamp and Fig. 4 shows a two-focal lense adapted for the arrangement according to the invention.

1 denotes a reflecting device of half ellipsoid form having at its front part a cylindrical reflecting surface 2. The centre of the filament of the lamp 3 is located in the focus F of the ellipsoidal device 1. In the second focus F' of the ellipsoid comprising the reflecting surface 1 converge all rays issuing from the central luminous point F' of the filament of the lamp 3. The rays issuing from the remaining parts of the lamp filament intersect at other points of the reflector axis in front of or behind the focus F thus creating a focal caustic.

According to the invention a screening blade 4 is placed underneath the focal caustic and perpendicular thereto at an intermediate point of the caustic, said blade intercepting all diverging and converging rays issuing from the filament in zones in front of or behind the main focal point F, intercepting also the passive rays due to defects of construction of the reflecting unit, the blade letting on the contrary free passage to all rays issuing from the geometric focus of the ellipsoid. The blade 4 is adjustable (Fig. 2), so that screening may be increased in order to limit the angle of aperture of the anti-dazzling beam of light thus sharply adjusting the angle of occultation until all upwardly directed rays are eliminated.

In order to obtain a double screening according to the invention, another screening blade 5 (shown only in Fig. 3) is located above the caustic, said blade being movable through the remote control of the arrangement. The blades 4 and 5 have a straight profile it being important generally to obtain a large horizontal lighting field; it is however obvious that the profile of the blades may be so shaped as to obtain many different forms of the issuing beam of light. The cylindrical reflecting body 2 carries secured at its front part a cover 6 carrying the screening blades 4 and 5 and the correcting lense 7. By this simple arrangement a high lighting efficiency is obtained owing to the wide angular aperture of the lamp rays captured by the reflector and the enlarged angular lighted field in the horizontal and downward direction produced by the reflection of the cylindrical mirror and by the lamp rays falling directly on the lense 7. The unit is enclosed in a casing 8, as in ordinary vehicle lights, said casing being provided with a protecting glass 9 having linear vertical lenticular ele-

ments for enlarging the beam of light in the horizontal direction.

According to a modified construction, the reflector is constituted by a complete ellipsoid 1, 1′ (shown partly in dotted lines in Fig. 1), having a front opening housing a lens 7; the screening blade 4 is located in the interior of the ellipsoid in proximity to the second focus F′ of the ellipsoid. The light emited by the lamp is thus utilised to a great extent, so that a high efficiency is ensured. A further advantage of this arrangement is obtained through the aperture of emergency of the beam of light, which may be of very reduced diameter, this advantage is of great importance when the light is used for mechanised troop transports, more particularly for tanks. For these vehicles the double screening lamp type (blades 4 and 5) will be more conveniently used for preventing visibility from aircraft. A vehicle lamp adapted for this use is constituted by an optical unit such as described, constituted by an ellipsoid and a two-focal very small lens, to which an upper screening blade provided with a remote control to permit an instantaneous insertion thereof is added. The lamp casing carries at its front part a screen which is preferable bent downwards and merges into the shield cap in order to conceal the direct vision of the lens. Moreover the inner surface of the lens support should be darkened in order to avoid any visible reflection or diffusion. The optical features of this lamp permit of including in the lamp itself and in a small space a series of coloured prismatic or lenticular filters (one of these filter is designated with number 10 in Fig. 2) which can be operated at will during driving, for instance a yellow cadmium sulphide glass filter to prevent eye fatigue in the fog owing to the low coefficient of diffusion of the light radiation through the fog, smoke and the like—a blue filter to obtain concealment of mechanised troop transports and prevent diffusion of light through particular atmospheric fog accumulations, fumous walls or gas fogs. The latter filter may also be combined with the yellow filter and in certain conditions it may improve visibility—a lens constituted by linear meniscus to enlarge the issuing beam in order to increase visibility on the sides in proximity to the vehicle, more particularly in foggy weather (this arrangement has the advantage of not reducing the head light radiation in normal conditions); a prismatic remote controlled glass plate located in proximity to the reflection caustic in order to deviate the rays in the vertical direction, thus directing the whole beam of light towards the ground.

It will be seen that in addition to the described filters other lenticular filters may be included for particular ray deviations and other coloured filters for signalling purposes, for instance a light may be devised for transmissions on the base of a predetermined multi-coloured code by means of a selecting keyboard arranged on the lamp or operated through a remote control.

According to the construction shown in Fig. 3 a parabolic reflector 1*a* is used in combination with a lens 12 to concentrate the rays issuing from the focus F onto the focus F′.

The invention comprises further a particular form of the lens 7, which may be, as shown in Fig. 1, constituted by a front convex portion and a rear conical portion in order to reduce the focal distance. In lieu of the lens shown in Fig. 1 a two-focal lens may be advantageously used in order to correct aberrations. For this purpose a lens constituted by two parts 7′ and 7″ may be used, as shown in Fig. 4.

Finally, when it is desired to adjust the dioptric focussing of the two halves of the lens with respect to the horizontal axial plane independently of each other, the lens is made in two parts separated along said plane. When it is not necessary to direct the beam of light to a great distance or a scattering of the rays is desired, a half-lens can be used in the upper part of the lamp from which the rays are issued or the lens 7 may be eliminated.

AROLDO CHITI.

PUBLISHED
MAY 25, 1943.
BY A. P. C.

A. CHITI
VEHICLE OR LIGHT LAMP
Filed May 14, 1940

Serial No.
335,177

Fig. 1

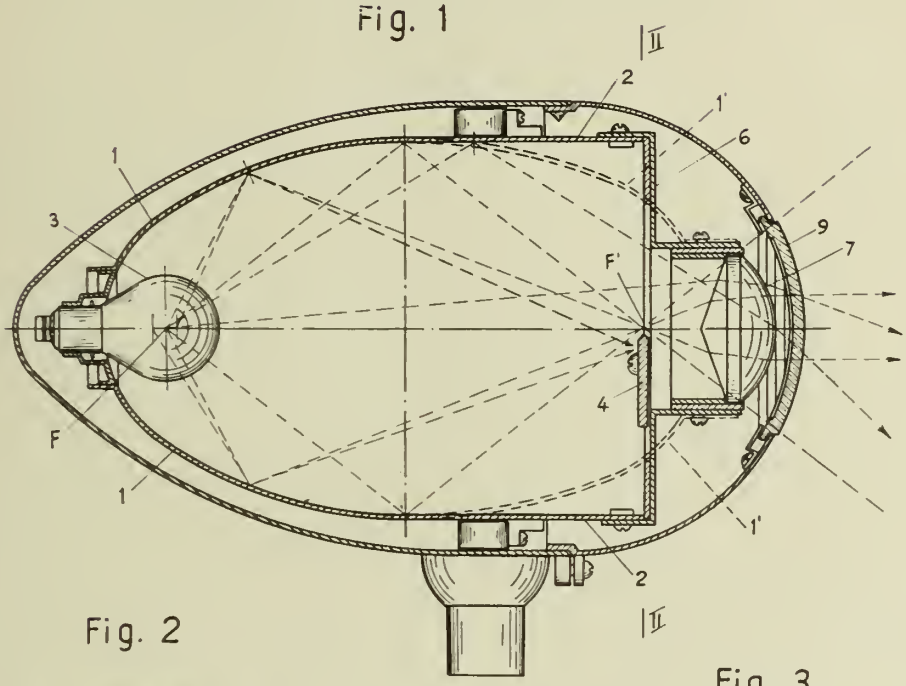

Fig. 2

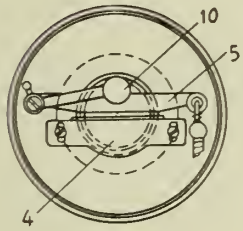

Fig. 3

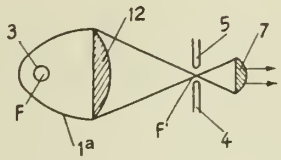

Fig. 4

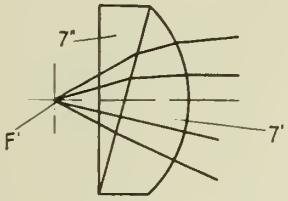

Inventor
Aroldo Chiti
by Sommers & Young
Attorneys

Published May 25, 1943 Serial No. 335,573

ALIEN PROPERTY CUSTODIAN

SUPPORTING ELEMENTS FOR AIRCRAFTS

Louis Arsandaux, Orleans, France; vested in the Alien Property Custodian

Application filed May 16, 1940

The present invention relates to supporting elements, such as wings, for aircrafts, and it is more particularly concerned with devices for deforming the vertical section of such elements, along the leading edge thereof.

The chief object of the present invention is to provide a device of this type which is better adapted to meet the requirements of practice than those used for the same purpose up to the present time, and in particular which permits of improving the lift of the aircraft element, especially the maximum lift thereof, by increasing the curvature of the median line of the aerofoil section, for instance with a view to obtaining a lower landing speed. The device may also act to increase the drag of the aircraft element, in order to brake it.

A particular object of the invention is provide means for deforming the external outline of the wing vertical section without acting on the frame of said wing.

Still another object of the invention is to provide means for deforming the external shape of the wing leading edge without producing sharp angles in the vertical section of the wing thus deformed.

Still another object is to permit a gradual deformation of the wing leading edge.

Still another object of my invention is to permit an elastic deformation of the wing leading edge.

For this purpose, according to an essential feature of the invention, I provide a deformable bag in the leading edge of the wing or other aircraft element, and this bag is more or less inflated through pneumatic means.

Of course, this device can be combined with other means for modifying the aerodynamic properties of the aircraft supporting element, such as a flap, a slot, or the like, or with means for removing ice from the wing surface.

Other features of the present invention will result from the following detailed description of some specific embodiments thereof.

Preferred embodiments of the present invention will be hereinafter described, with reference to the accompanying drawings, given merely by way of example, and in which:

Fig. 1 is a diagrammatical view illustrating the principle of the invention;

Fig. 2 is a vertical sectional view of a particular embodiment, showing the air chamber in the inflated position;

Fig. 3 is a similar view, showing the chamber in the deflated state;

Fig. 4 is a view, similar to Fig. 2, showing another embodiment;

Fig. 5 is a perspective view showing the wing internal arrangement used in connection with the embodiment of Fig. 4;

Fig. 6 is a diagrammatic perspective view, illustrating how compressed air can be fed to the air chamber.

The embodiment illustrated by Fig. 1 includes the following elements:

a.—An air chamber or bag (of course this chamber can contain any gas other than air), the section of which is A D E F C A, made of a fluidtight deformable material, such as a rubberized fabric, which is not extensible, or a sheet of rubber, which is extensible. This chamber or bag is secured at A to the upper side of the wing leading edge;

b.—An envelope **2**, extending from B to E, constantly stretched either by its own elasticity or by any suitable elastic return device. The function of this envelope **2** is to urge the air chamber toward the deflated position, without forming plaits or folds on the under side of the leading edge of the wing;

This device will operate in the following manner:

When no gas under pressure is present in chamber **1**, the tension transmitted to point E by envelope **2** tends to keep the deformable device applied against the solid structure of the wing. This structure is so designed that the whole thus formed constitutes the normal contour of aerofoil G A C B G, the median line of which is M. This normal shape is thus obtained even in case of leakage of the device.

When a gas under pressure (air) is introduced into chamber **1**, it tends to take a shape such as A D E F C A, under the combined effect of the pressure in said bag or chamber **1** and of the reaction of envelope **2**. This shape corresponds to another median line M', the curvature of which is greater than that of M.

Figs. 2 and 3 correspond to the case in which part **2** is supposed to consist of an elastic sheet, rigidly fixed at B to the solid structure of the wing and at E to the air chamber **1**. In the embodiment of Fig. 2, the chamber is supposed to be inflated to the utilization pressure, while Fig. 3 shows the same device in the state of rest, corresponding to normal flight conditions.

Figs. 4 and 5 correspond to the case in which wall **2** is supposed to consist of an element **3** which is not extensible. This element **3** envelopes the whole of air chamber **1**, and it is rigidly fixed

at A to the frame of the wing on the upper side of the leading edge and elastically urged at B′ toward the rear of the under side of the wing.

In Fig. 5, I have shown a perspective of the inside of the wing, intended to show how the return means are adapted to act on element 3. A rigid flat bar, or blade 4 is fixed to the rear edge of element 3. It is provided with pins 5, which are urged rearwardly by elastic cables 7. These pins extend through guiding slots 6 provided in an element 9 of the wing frame, this element covering the slot which exists in the structure when the air chamber is to be inflated with air under pressure.

The desired pressure is produced in air chamber 1 by feeding thereto a certain amount of air under pressure from any suitable source, for instance a bottle, as shown by Fig. 6, preferably with the interposition of a pressure relief device L, adapted to work between a maximum and a minimum, the limits depending upon the kinematic characteristics of the aircraft.

Of course, any other source of gas under pressure may be used according to the present invention.

LOUIS ARSANDAUX.

PUBLISHED
MAY 25, 1943.
BY A. P. C.

L. ARSANDAUX
SUPPORTING ELEMENTS FOR AIRCRAFTS
Filed May 16, 1940

Serial No.
335,573
2 Sheets-Sheet 1

Fig. 1

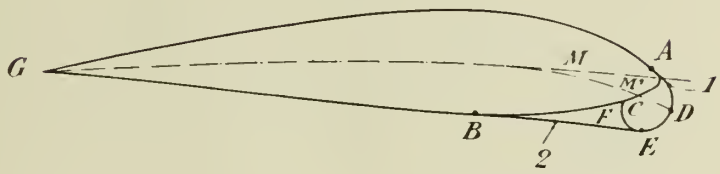

Fig. 2

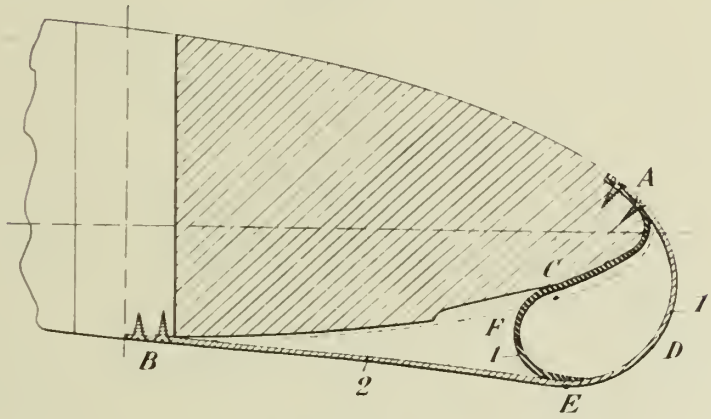

Fig. 3

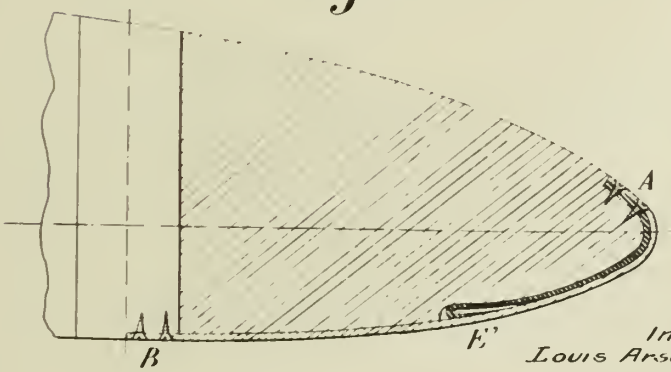

Inventor
Louis Arsandaux,

By Bailey & Larson
Attorneys

PUBLISHED
MAY 25, 1945.
BY A. P. C.

L. ARSANDAUX
SUPPORTING ELEMENTS FOR AIRCRAFTS
Filed May 16, 1940

Serial No.
335,573
2 Sheets-Sheet 2

Fig. 4

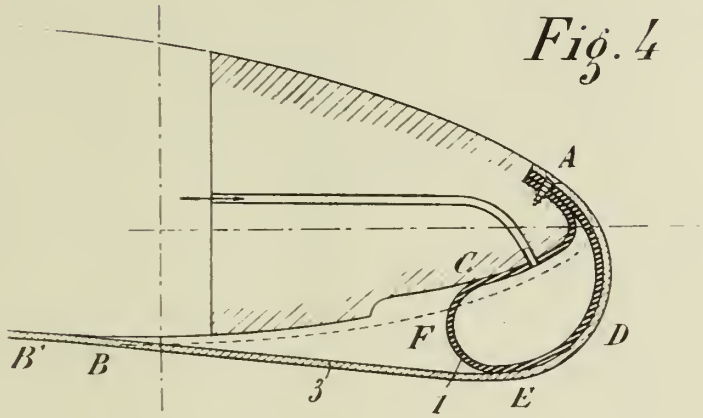

Fig. 5

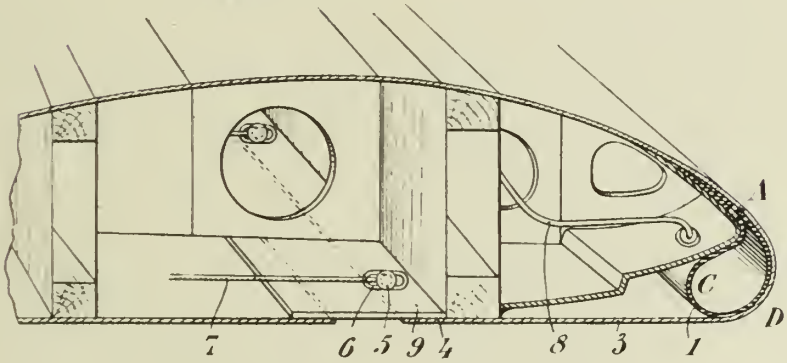

Fig. 6

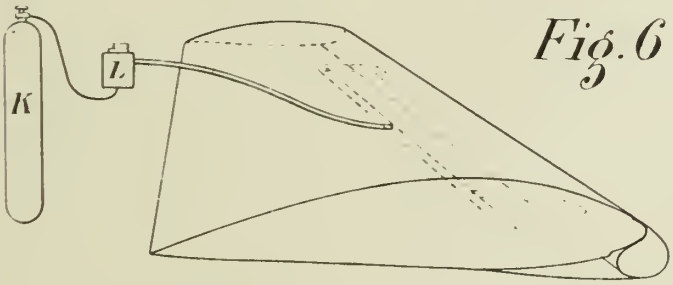

Inventor
Louis Arsandaux

By Bailey & Larson
Attorneys

Published May 25, 1943

Serial No. 335,634

ALIEN PROPERTY CUSTODIAN

CLOSING AND CLAMPING DEVICE

Miksa Gerendas, Budapest, Hungary; vested in the Alien Property Custodian

Application filed May 16, 1940

The present invention relates to a clamping or fastening means for holding together flexible sheets, particularly paper sheets. In my co-pending application serial number 322,241 filed March 4, 1940, such a device is described, many variations being duly explained in this application. The present invention relates to further modifications and perfections of the clamp.

In the enclosed drawings these new forms of the clamp are shown, but it is understood that the drawings only illustrate embodiments shown by way of example.

Fig. 1 is a side view of the first form of the closing sleeve and Fig. 2 is a cross section in larger scale taken on line II—II.

Fig. 3 is the side view of another form and Fig. 4 is an explanation belonging to Fig. 3. Fig. 5 is an enlarged cross section on line V—V of Fig. 3.

Fig. 6 shows a somewhat modified form of the closing sleeve viewed from below.

Figs. 7 and 8 show two further embodiments in cross section.

Figs. 9 and 10 are similarly cross sections of two other forms of the invention;

Fig. 11 is the front view and Fig. 12 the side view in a larger scale of a paper bag fitted with the closure according to the invention.

Figs. 13 and 14 are cross section taken on line *a—b* of Fig. 11 and showing the bag in two different closed positions.

Figs. 15 and 16 are two views of another paper bag.

Figs. 17, 18 and 19 are three views, partly in section, of a further embodiment of the closure according to the invention and

Figs. 20 and 21 illustrates another form.

Fig. 22 illustrates a still further form and Fig. 23 a parcel (a part being broken away) belonging thereto. Finally,

Fig. 24 shows the last form illustrated by way of example.

In the said co-pending application it is set forth that the elastic sleeve having a fissure with a divergence at the ends and serving to press together the sheets to be united, may be provided with a handle for making possible a convenient transport of the parcel closed by the new clamping device. It is also stated that this handle may have the shape of a frame and that it may be put into the inside of the sleeve. According to Figs. 1 and 2 of this application the handle is not inserted in the sleeve, but the sleeve **1** is provided on its upper part that is to say opposite the fissure **2** with two lips or elongations **3** each having a hole **4** and the handle **5** made of metal, celluloid, or the like is inserted in these holes. In such a way somewhat less metal is needed for the production of the device than if a frame-like handle is used and this fact may be important if a very great quantity of the closure if manufactured.

Owing to the elasticity of the handle **5** it is very easy to insert it into the holes **4** of the lips **3** and after the insertion the handle is held firmly at its place.

According to Fig. 3 the handle is constituted by a cord, twine, thread or the like member **6**, which is inserted into the inside of the sleeve **1** and may be closed in itself like a ring. In the upper part of this sleeve that is to say in the part opposite the fissure **2** there is a bore **7** and the cord or the like (not shown in Fig. 5) enters this bore. Of course, it would be possible to employ two bores **7** at both ends of the sleeve and to let the thread enter the sleeve through one of these bores and to leave it through the other one, as shown in dot-and-dash lines in Fig. 3; alternately, both bores may be dispensed with and the thread may enter through one of the ends of the sleeve and leave it through the other. However, the first mentioned form (i. e. two bores **7**) has the disadvantage that it is dear as the insertion of the thread in two little bores lasts long, and the second mentioned embodiment (no bores) is disadvantageous as the putting of the sleeve onto the sheets is difficult. Namely, when pushing this sleeve onto the edges to be clamped, the cord is pressed out from the sleeve through the fissure, as shown in Fig. 4.

The device shown in Fig. 3 is put to its place always in the direction of the arrow **8** and so the cord cannot leave its place, however, the production of the device is cheap, what is proved by experience.

Instead of the bore **7** a hole of different shape may be employed. Fig. 6 shows a sleeve having a recess **7***a* at one of its ends and the cord may enter this recess in the same way as it enters the bore **7**. As the sleeve shown in Fig. 6 is always pushed to its place in the direction of the arrow, the divergence of the fissure **2** particularly described in my said co-pending application, is only applied at the end of the sleeve provided with the recess **7***a*.

The cord or thread handle can be employed in the embodiment shown in Figure 1 too, in such a way that the cord enters the holes **4**.

According to Fig. 7 the edges of the sheets to be fastened or clamped together are reinforced,

for instance in such a way that the upper parts of the sheets are folded and in the pocket thus formed a little rod **9** is put, which is made of hard paper, wood, or the like. Instead of this rod a wire, or any other strengthening or thickening may be employed, which is adapted to guide the sleeve and to hold relatively great forces. It is advantageous if the thick edge is of such a diameter that it fills out the sleeve, but this is not necessary, as the little rods **9** proved to be always useful for preventing an unintended disengagement of the closure. For this purpose it is only important that the edge be thicker than the width of the fissure **2**.

The strengthened parts need not to be employed on both edges that is to say on both sheets to be fastened together, it is enough if one of the sheets is provided with a thick, rod-like part. In this case the best way to follow is to bend the not strengthened sheet onto the other sheet, as shown in Fig. 8. In this form the not strengthened or stiffened part **10** is folded around the thick edge **11** of the other sheet and so after putting the sleeve **1'** to its place the closure is perfect. In Fig. 8 a sleeve is shown which is provided with an inwardly bent flange **12** which may be advantageous for stiffening the sleeve. The manufacture of this sleeve is very easy and cheap, as this sleeve can be made by simply rolling a little metal sheet.

It is understood that the sleeve may have any other shape in cross section and in Fig. 10 a closing or clamping sleeve is shown having triangular cross section and provided with two inwardly bent flanges **12**.

Fig. 9 shows an embodiment of the invention in which both edges of the sheets to be fixed are fitted with a strengthened edge and this strengthening is made in such a way that a small sleeve **13** is put on each edge of the sheets, this edges being made somewhat thicker than the sheet itself, as shown at **14** in the drawing. The two small sleeves **13** are united by a larger sleeve **15** and so a closure is provided, which may be well used for closing heavy bags or the like.

Figs. 11 to 14 show the application of the form shown in Fig. 8 on a paper bag adapted to be used in a grocer's shop, fancy-shop, or the like. This bag substantially consists of two larger side sheets **16** and **16'** united by two small side sheets **17** acting like a bellows and allowing the pressing of the bag to a flat shape in a well known manner. Fig. 12 does not illustrate the bag in this flat form, but in a state in which the side sheets are somewhat remote from one another.

According to the invention, the edge **18** of the side sheets **16** is provided with a strengthening **19** which may be made by bending the upper part **20** of the sheet **16** and securing a little rod **21** in the folded part, as mentioned in connection with Fig. 8. The other, not strengthened side sheet **16'** is made somewhat longer than sheets **16**. When the bag is filled with ware, the upper part of the bag is pressed to be flat and the upper part **16a** of sheet **16'** is folded around line *c—d* (Fig. 11) to bear on the thick part **19** (Fig. 13) and then the sleeve **1** is put to the edge to complete closure. As shown in Fig. 11, it is enough if the thick part **19** is in the middle of the sheet only, however, it can be employed on the whole width of the sheet.

The sleeve **1** may be provided with a handle of any description.

On the sheet **16** there is another thick part **22** which is shown by way of example on the whole width of the sheet and is employed at a certain distance from the opening of the bag. If the bag is not totally filled, it is advantageous if this strengthening **22** is used and so the closure shown in Fig. 14 is employed, according to which the side walls of the bag are bent around line *e—f* (Fig. 11) and then the closing sleeve is applied.

It is understood that both upper edges of the side sheets **16** and **16'** may be provided with thicker part and so the closure of the type shown in Fig. 7 or 9 may be used in connection with the bag. Of course, in this case the two sheets **16** and **16'** are of equal length.

Fig. 15 shows a simple paper bag, on which the thick edge **19** is employed on the longer side sheet, and not on the shorter, as shown in Fig. 11. This bag is closed in such a way that the upper part of the bag is folded around line *g—h*, so that the edge **19** comes to the place marked in dash-and-dot lines in Fig. 15, and then the upper part is bent down along line *i—k*. Now the closing sleeve may be put onto edge, as clearly shown in Fig. 16. The line *g—h* is higher or lower according to the quantity of ware put in the bag. If the bag is almost filled, this line is as high as possible.

In the foregoings always a sleeve or a little pipe was mentioned. However, this sleeve or pipe may be made so short that it constitutes an open ring only. This form of the invention is shown in Figs. 17 to 19 according to which the substantial part of the closure is a ring **23** having an opening **24**. The ring may be provided with a handle of any desired shape and material; in Figs. 17 and 18 a handle is shown which is constituted by a thread **25**. The closure is made in such a way that one of the sheets are bent around the thick edge of the other sheet as described above, and then the ring is pushed to its place in the direction of the arrow shown in Fig. 19, which is an enlarged section taken on line XIX—XIX of Fig. 17. In this figure 19 it is shown that the ring is made of wire having circular cross section, which is advantageous if the ring is pushed onto an edge **19** almost as thick, as the inner hole of the ring. The rotundity of the ring in this case substitutes the divergence of the figure described in my said co-pending application and shown in Fig. 6 of the drawings of this application.

It is obvious that the open ring may be employed as well as the open sleeve at every type of closure described in this application and in the said co-pending application, if the forces are not so great that the ring cannot withstand. If the forces are great, two or more rings may be employed and Fig. 20 shows an embodiment in which a handle **26** is provided at both ends with a ring **23**, which is to be seen in Fig. 21 too. The width of the ring varies with the forces applied to it and on the left side of Fig. 20 a ring is shown which is wider than the handle **26**, while the other ring is narrower than the handle.

It is possible to employ at the end of the handle more than one ring if necessary.

Fig. 22 shows an embodiment made of a piece of wire and functioning like a hook. The straight part **27** is the handle and the lower part **28** is the hook which is adapted to engage a rod **9** or **11** shown in Figs. 7 and 8. For this purpose a hole is to be made adjacent the rod, as shown in Fig. 23. According to this figure the sheet (which may be the side part of a bag) is provided at its edge with a stiffening **19** already set forth above, and just underneath this thick edge there are

two holes **29**. In each of these holes a hook **28** may be inserted, only one of these hooks being shown in Fig. 23. The two hooks are united by a handle **30**. In this case the stiffening **19** must be so strong that the load could be suspended on the handle **30**.

In the form shown in Fig. 24 the whole device is made of piece of steel wire in the shape of a number **8**. The under part of this device, which is open at its lower part, is the ring as described in connection with Figs. 17 and 18, and the upper part is the handle; if this handle is pressed according to the arrows **31**, the opening **24** of the lower part becomes wider and the device can be put to its place, thereupon it elastically returns to its original shape.

MIKSA GERENDAS.

PUBLISHED
MAY 25, 1943.
BY A. P. C.

M. GERENDAS
CLOSING AND CLAMPING DEVICE
Filed May 16, 1940

Serial No.
335,634
2 Sheets-Sheet 1

Fig. 1.

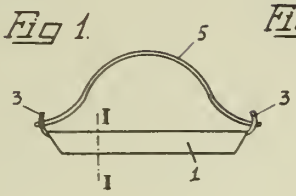

Fig. 2.

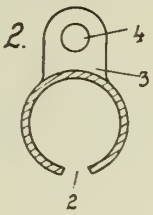

Fig. 3.

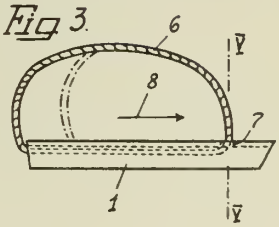

Fig. 4.

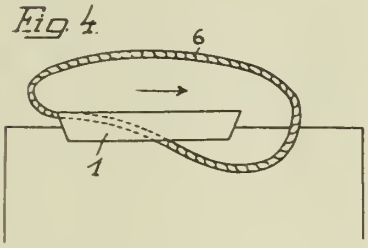

Fig. 5.

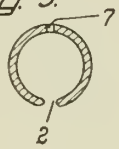

Fig. 7.

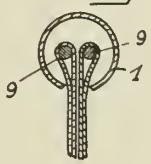

Fig. 6.

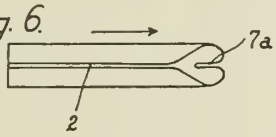

Fig. 8.

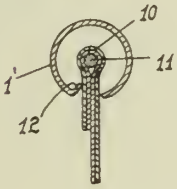

Fig. 9.

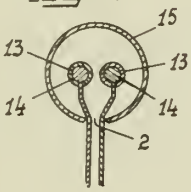

Fig. 10.

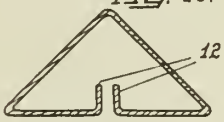

Fig. 11.

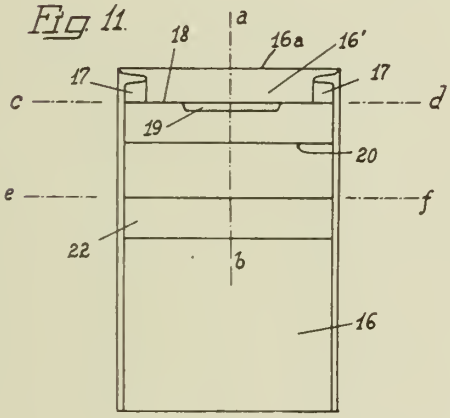

Fig. 12

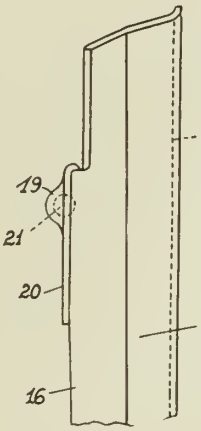

Inventor,
M. Gerendas
by: Glascock Downing & Seebold
Attys.

PUBLISHED
MAY 25, 1943.
BY A. P. C.

M. GERENDAS
CLOSING AND CLAMPING DEVICE
Filed May 16, 1940

Serial No.
335,634
2 Sheets-Sheet 2

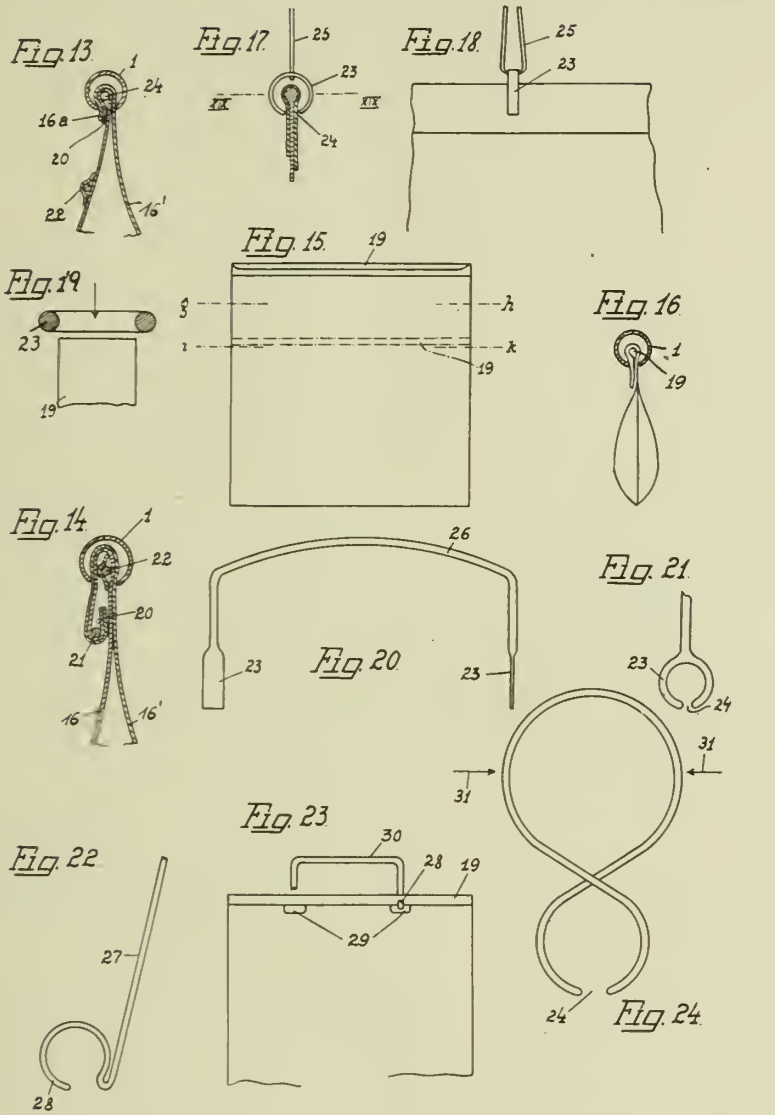

Inventor:
M. Gerendas

By: Glascock Downing & Seebold
Attys.

Published May 25, 1943

Serial No. 335,638

ALIEN PROPERTY CUSTODIAN

LOCKING MECHANISM FOR TOOTHED RACKS, PARTICULARLY FOR ADJUSTABLE STRUTS ADAPTED FOR USE ON AIRPLANES

Willy Lohs, Berlin-Siemensstadt, Germany; vested in the Alien Property Custodian

Application filed May 16, 1940

This invention relates to a locking mechanism for toothed racks, particularly for adjustable struts adapted for use on airplanes, in which the strut is provided at its periphery with ball notches cooperating with ring-shaped members for locking the balls.

Mechanisms of the above-indicated character have already been proposed for hydraulically operated retracting struts.

The invention relates to a particularly suitable construction of such locking mechanisms for electrically operated adjustable members. It consists in the use of an electric motor drive for said members to release and lock the same.

The essential features of the novel locking mechanism consist in the fact that a motor-driven transmission gear acting upon the balls through the ring-shaped locking members and in engagement with the rack toothed preferably at both sides thereof is provided and that the locking may be released and established upon the relative displacement of the transmitting gear with respect to the toothed rack.

A further object of the invention is to provide a locking mechanism in which the transmission gear is arranged between the locking members and is in engagement through gears with the rack and through catches with the locking members.

A further object of the invention is to provide a locking mechanism in which by the displacement of the rack by means of the transmission gear, the locking member surrounding the balls completely in contact with the restricted portion of the strut is displaced by the catches of the transmission gear, thereby releasing the locking.

A further object of the invention is to provide a locking mechanism in which after releasing the locking by displacing the transmission gear with respect to the rack in the direction towards the locking member the latter is displaced by the catches of the transmission gear with respect to the balls and in which by further displacing the rack with respect to the transmission gear in a direction opposite to the above-said direction the locking may be reestablished.

A further object of the invention is to provide a locking mechanism in which the transmission gear is provided at its both ends with flanges having inwardly slant surfaces which form during the adjustment of the rack the contact surfaces of the transmission gear for the balls which are in engagement with the housing of the locking device, whereas the flanges serve when displaced as locking members surrounding the balls.

A further object of the invention is to provide a locking mechanism in which the toothed rack is provided with cylindrical recesses for the reception of the balls and extending in parallel relation to the axis of the rack, the rack being provided at its both ends with a bent portion and in which the balls are positively guided by the rack in a cage or on a thrust ring, so that when being displaced they are guided in the cylindrical recesses and rest on the straight surface portions of the transmission gear, whereas in the position of rest they are pressed against the slant surfaces of the driving gear.

A further object of the invention is to provide a locking mechanism in which on the rack between the ends thereof and the two circular locking bodies firmly secured to the rack is loosely arranged a pressure ring provided with recesses for the rack and which is guided by means of pins in spiral-shaped slots provided in the casing of the locking mechanism, the recesses and the pins being displaced with respect to each other to such an extent that upon the release of the locking the toothed rack passes through the recesses.

A further object of the invention is to provide a locking mechanism in which the surfaces of the pressure ring and of the casing are inclined with which the balls contact when bringing the balls in and out of engagement with their cooperating surfaces.

In the accompanying drawings are shown some embodiments of the invention in diagrammatic form.

Fig. 1 is a schematical representation of a wheel retracting gear for airplanes.

Fig. 2 is a lateral view of a retracting strut provided with a driving motor.

Fig. 3 is a sectional view of the strut shown in Fig. 2.

Fig. 4 is a fragmentary sectional view of a similar retracting strut with a modified locking device.

Fig. 5 shows another embodiment of the locking device.

Fig. 6 is a fragmentary sectional view taken along the line A—B of Fig. 5.

Fig. 7 shows a detail of the embodiment shown in Figs. 5 and 6 with the ball cage shown developed.

Fig. 8 shows another modified form of the locking device with a ball notch.

Fig. 9 shows a development of the bearing for the balls.

Fig. 10 shows a lateral view partly in section

of a modified form of the ball holding device in the locked position.

Fig. 11 is a sectional view taken along the line C—D of Fig. 10.

Fig. 12 shows a view corresponding to Fig. 10 in the released position.

Fig. 13 shows a modification of the ball holding device of Figs. 10 to 12.

To retract and lower the landing gear *a* (Fig. 1) with the aid of the retracting strut *b*, the motor-driven toothed rack cooperating with reduction gears is, for instance, employed instead of the known hydraulic drive without it being necessary to employ a substantially larger space than that required for the hydraulic drive. To relieve the gear it is preferable in such cases to lock both end positions. In this case the locking mechanism must be able to take up when retracting and lowering the landing gear a load which is a multiple of the maximum load of the strut *b*. If it were desirable to effect the mechanical displacement of the retracting strut, for instance, with the aid of a spindle drive, a particular locking mechanism might be under circumstances dispensed with; however, in this case the mechanism would have to be rather amply dimensioned in view of the great load. Furthermore, the efficiency would be small and a deflection of the strut might easily cause a jamming in the spindle nut.

When designing the strut drive and the strut locking device as shown in Figs. 2 and 3 the retracting strut 1 is designed in the form of a rack toothed at both sides thereof. The movable transmission gear 2 with the flange electric motor 3 is movably mounted on the retracting strut. Only in the axial direction the movement of the transmission gear 2 with respect to the casing 5 is limited by the ring-shaped stops 4 and 4*a* of the casing 5. In the embodiment shown the power is transmitted to the toothed rack through eight gears 6. The locking is effected by the balls 7 and 7*a* respectively which at the end positions are in engagement with the restricted portions 13 and 14 of the strut 1. The retracting strut is locked as shown in Fig. 3 in the retracted position. If the strut is to be lowered the motor 3 is rotated in such a direction as to cause the transmission gear 2 to move in the upward direction with respect to the strut 1. In this case the locking device is moved in the upward direction by the catches 8 which comes into engagement with the pins 9*a* secured to the locking ring 9. At the same time by the interposition of the spring 12 the upper locking ring 11 is pressed against the upper balls 7*a*. As soon as the lower edge of the slant surface of the ring 9 has passed when moving in the upward direction beyond the center of the balls 7, the latter are pressed in the downward direction by the force of the strut 1 stressed by the weight of the landing gear and come into engagement with the slant surface of the ring 9. After the balls 7 have released the strut 1 the latter moves together with the transmission gear 2 in the downward direction still the latter comes into engagement with the stop 4 of the casing 5, thus compressing the spring 10, whereas the ring 9 comes to rest on the balls 7. Consequently, the strut permits the landing gear to be gradually lowered until the counterpressure has become so great that an additional compressive force must be brought about by the strut. As soon as this condition has been fulfilled, the transmission gear 2 moves in the upward direction till it contacts with the ring 11, thus causing the ring 11 to be pressed against the upper balls 7*a*, and the springs 12 are compressed, whereas the springs 10 are relieved of the compressive force. The landing gear may now be lowered to the end position. As soon as the end position is reached, the ring 11 presses the balls 7*a* into the upper restricted portion 14 of the strut 1 and moves in the upward direction to press the balls 7*a* against the restricted portion 14, thereby locking the strut 1. The landing gear is retracted in the reverse manner.

To prevent under all circumstances when unlocking the ball holding device the strut and the transmission gear from being suddenly released and the transmission gear from striking the stop 4, the locking mechanism may be designed in the manner as shown in Fig. 4. In this case the slant surfaces 24 of the transmission gear 21 are in engagement with the balls 22 when the landing gear is being retracted or lowered. If the edge 51 of the restricted portion of the strut 23 passes beyond the center of the balls when the strut is being retracted, the balls are caused by the transmission gear 21 which moves slowly in a direction opposite to the direction of the strut to glide into the restricted portion of the strut. If the balls 22 fit snugly the restricted portion of the strut 23 so as to lock the latter, the extensions 52 of the transmission gear 21 are moved over the balls 22, thus locking the strut in the end position. When the landing gear is being lowered the transmission gear 21 moves in the upward direction to such an extent as to release the balls which upon the further displacement of the transmission gear 21 are continuously pressed against the slant surfaces thereof, thereby preventing the balls from falling out. In order that the pressure of the balls against the strut does not become too great during the retraction and lowering of the landing gear, the angle α at which the surface 24 is inclined must be relatively small.

To prevent the balls from being pressed against the strut during the retraction and lowering of the landing gear, the locking device may be modified in a manner as shown in Figs. 5 to 7. The locking device is designed in the same manner as shown in the embodiment in Fig. 4 except that the balls 22 are arranged in a particular ball cage 25 which with respect to the transmission gear 31 is rotatably mounted on the toothed rack 29. In this case the toothed rack is bent at the ends as shown in Fig. 7. At the same time the transmission gear 31 is designed at the point at which it is in engagement with the balls 22 in the manner as shown in Figs. 5 and 6, i. e., the straight contact surface portion 26 of the transmission gear 31 perpendicular to the axis of the strut is in engagement with the balls during the retraction and lowering of the strut. Only in the neighborhood of the end position of the adjustable strut, the bent end 29 of the toothed rack 4 rotates the ball cage 25 to such an extent that the balls come into engagement with the cylindric grooves 27 of the transmission gear 31. As long as the upper edge of the restricted portion of the strut has not yet passed beyond the center of the ball, the slant surface 28 of the transmission gear rests on the balls and presses the same against the strut. However, if the upper edge of the restricted portion of the strut passes beyond the center of the ball, the balls move radially into the restricted portion. The transmission gear is then slowly lowered, for instance, during the retraction of

the strut. In the end position of the strut the balls fit snugly the restricted portion of the strut and prevent a further movement of the same. The transmission gear with its cylindric notches 27 is now allowed to move in the downward direction beyond the center of the ball, thus locking the strut in the end position. When the strut is to be lowered, the transmission gear moves in the upward direction, releases the balls which are pressed outwardly and come into engagement with the slant surface 28 of the transmission gear 31. As soon as the strut is released the ball cage is again rotated in such a manner as to cause the balls to come into engagement with the straight surface 26 of the transmission gear 31 so that when the strut is lowered to a further extent they no longer exert a radial pressure on the strut. In this manner any sudden change of the position of the strut and the transmission gear is prevented in the embodiment just described.

To disconnect the driving motor, end switches are employed, which are actuated when the transmission gear 31 reaches the lower and upper end position.

Figs. 8 and 9 show an improved ball holding arrangement according to Figs. 5 to 7 in which the gliding of the balls is prevented during the rotation of the ball cage by means of a thrust bearing for the balls. The latter contact the ring 32 in the position shown which permits the balls to roll when the ball cage 25 is being rotated. The ring in turn is rotatably mounted with respect to the casing 33, since it is supported on balls 34. To displace the balls 22 with respect to the casing 31, the ring 32 is preferably only rotated. In this case only half the power is necessary as compared to that necessary for rotating the ball cage 25 according to the previous embodiment, the angle of displacement must, however, be twice as great as that of the preceding embodiment (see Fig. 9).

A further embodiment is shown in Figs. 10 to 12. The transmission gear 41 is substantially designed in the same manner as that shown in Fig. 4. A locking ring 42 provided with the restricted portion 47 is firmly secured to the strut 43. The pressure ring 44 which loosely surrounds the strut 43 between the end of the toothed rack 45 and the locking ring 42 is guided in two spiral-shaped slots 53 of the casing 46 with the aid of pins 48 and 49. The balls 50 no longer surround the entire periphery of the strut 43. They are symmetrically arranged with respect to the diameter of the strut as will be seen from Fig. 11.

In this embodiment the strut is lowered in the following manner: The transmission gear 41 moves at first in the upward direction and releases the balls 50 so that the latter are allowed to leave the restricted portion 47, whereupon the strut 43 moves in the downward direction. The toothed rack 45 is thus stressed against the pressure ring 44 which is forced in the downward direction and carries out a rotation owing to the spiral-shaped slots in the casing 46, so as to position the ring 44 in front of the balls 50 in the manner as shown in Fig. 12. The recess of the ring 44 is at the same time so positioned that the rack 45 toothed at both sides thereof may pass through the recess upon the further rotation of the pressure ring 44.

To lock the strut in the lowered position the same locking arrangement is employed in the upper end of the transmission gear.

When the strut is in the retracted position the ring 42 entrains the pressure ring 44 in the upward direction which is rotated again to the initial position and the balls 50 glide again into the restricted portion 47 of the ring 42.

To improve the conditions of friction when locking and unlocking the strut, the contact surfaces of the pressure ring 44 and of the casing 46 for the balls 50 may be slanted off as shown in Fig. 13.

WILLY LOHS.

PUBLISHED

MAY 25, 1943.

BY A. P. C.

W. LOHS

LOCKING MECHANISM FOR TOOTHED RACKS, PARTICULARLY FOR ADJUSTABLE STRUTS ADAPTED FOR USE ON AIRPLANES

Filed May 16, 1940

Serial No. 335,638

3 Sheets-Sheet 1

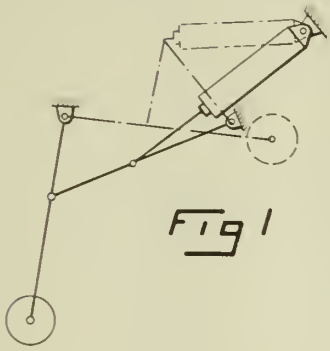

Fig 1

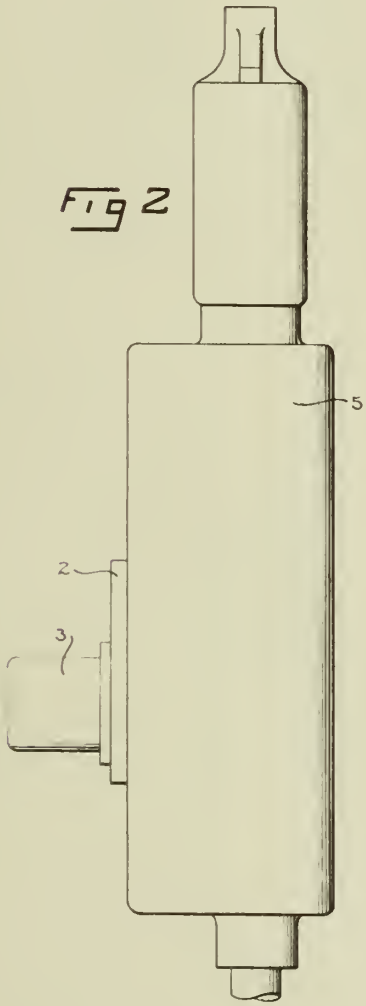

Fig 2

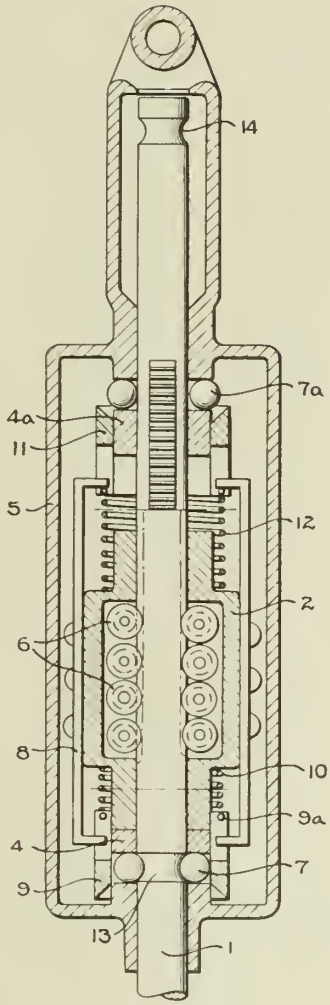

Fig 3

INVENTOR.
Willy Lohs
BY
Stephen Cerstvik.
ATTORNEY.

PUBLISHED

MAY 25, 1943.

BY A. P. C.

W. LOHS

LOCKING MECHANISM FOR TOOTHED RACKS, PARTICULARLY FOR ADJUSTABLE STRUTS ADAPTED FOR USE ON AIRPLANES

Filed May 16, 1940

Serial No. 335,638

3 Sheets-Sheet 2

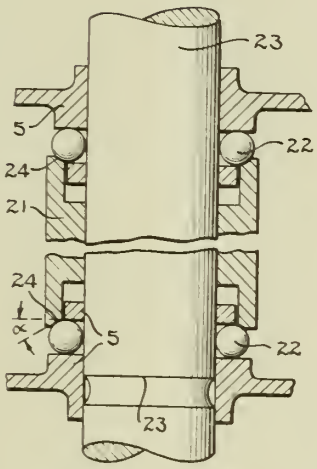

Fig 4

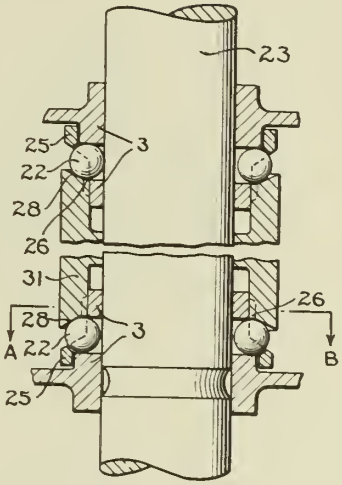

Fig 5

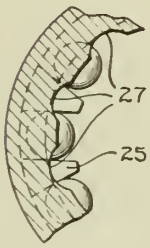

Fig 6

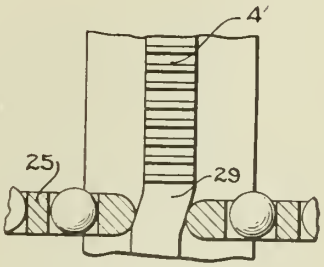

Fig 7

INVENTOR.
BY Willy Lohs
Stephen Cerstvik
ATTORNEY.

PUBLISHED

MAY 25, 1943.

BY A. P. C.

W. LOHS

LOCKING MECHANISM FOR TOOTHED RACKS, PARTICULARLY FOR ADJUSTABLE STRUTS ADAPTED FOR USE ON AIRPLANES

Filed May 16, 1940

Serial No. 335,638

3 Sheets-Sheet 3

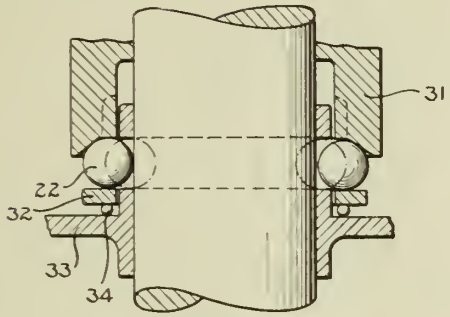

Fig 8

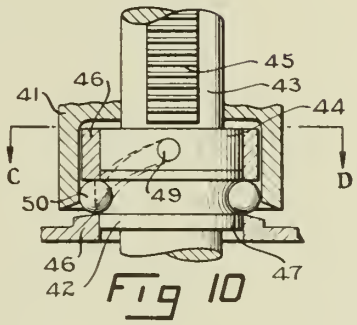

Fig 10

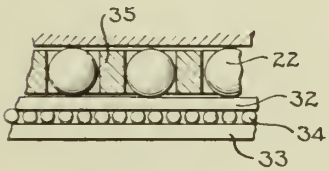

Fig 9

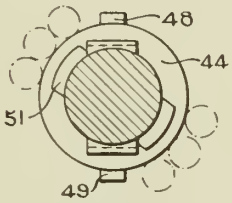

Fig 11

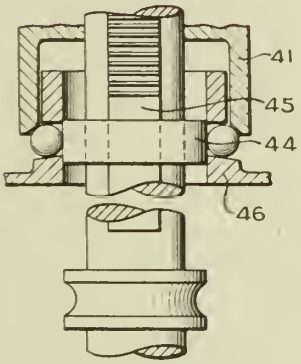

Fig 12

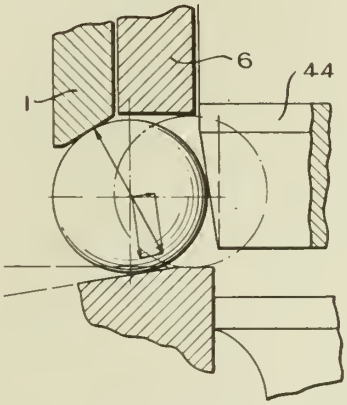

Fig 13.

INVENTOR.

BY Willy Lohs

Stephen Cerstirk

ATTORNEY.

Published May 25, 1943

Serial No. 336,047

ALIEN PROPERTY CUSTODIAN

STAMPING MACHINE

Wilhelm Friedrichs, Berlin-Reinickendorf-Ost, Germany; vested in the Alien Property Custodian

Application filed May 18, 1940

This invention relates to a stamping machine, comprising a calculating mechanism of the pin wheel type the pin wheels of which are arranged coaxially with the stamping cylinder.

It is an important object of the present invention to provide a construction of a stamping machine which is very compact and comprises relatively few and simple components.

With this and further objects in view, as may become apparent from the within disclosures, the invention consists not only in the structures herein pointed out and illustrated by the drawings, but includes further structures coming within the scope of what hereinafter may be claimed.

The character of the invention, however, may be best understood by reference to certain of its structural forms, as illustrated by the accompanying drawings in which:

Fig. 1 is a plan view of a machine having the invention applied thereto, with the hood taken off.

Fig. 2 is a section on line C—D of Fig. 1.

Fig. 3 is a section on line A—B of Fig. 1.

Similar reference numerals denote similar parts in the different views.

In the stamping machine illustrated in the drawing, the adjusting movement is transmitted from the adjusting discs to the type wheel shaft by means of transmission shafts arranged parallel to the shaft of the stamping cylinder and extending through slots in the adjusting discs. Advantageously these transmission shafts are driven by means of toothed portions provided on the edges of the slots in the adjusting discs, preferably in the form of an inside toothing.

According to a further feature of the invention, discs which are recessed Maltese cross-fashion are provided besides the adjusting discs, which recessed discs serve to effect the tens-shifting in the calculating mechanism of the machine. Said Maltese-cross discs cooperate with star-shaped wheels per se known. Moreover, cams may be provided on the shaft of the pin wheels which act upon the overthrow locking members for the wheels of the totalizer mechanism. While not substantially increasing the space occupied by the set of pin wheels, said cams substitute the relatively complicated drive for separate locking members of this kind which is normally used.

The lock of the pin and type wheels is advantageously effected by means of a slide guided in the hollow shaft of the stamping cylinder and controlling a locking member for the type wheels, which slide releases the cylinder for rotation in the locked position of the type wheels, by its shifting, moving a projection of the slide out of the reach of a cooperating stop.

Referring now to the drawings in greater detail, it will be seen that a main shaft **2** is mounted for rotation in the side wall **1** of the machine frame while the left hand end of the main shaft is fixedly secured in the right hand side of the stamping cylinder **3**. A central projection or journal **4** on the left hand side of the stamping cylinder is mounted for rotation in the side wall **5** of the machine frame. Mounted on shaft **2** is a set of cross pin wheels **6**. The pins **7** of the pin wheels **6** are adjusted or set in known manner by means of adjusting or setting discs **8** provided with adjusting curves **9** and handles **10**.

Moreover, the setting discs **8** are recessed at **11**, Fig. 2 and the outer edge of each recess is formed with an inside toothing **12** cooperating with toothed wheels **13** mounted on a set of telescoped shafts **14**, **15**, **16**. The innermost shaft **14** is supported at its end in the body of the pin wheel **6**, and together with the surrounding shafts **15** and **16** extends through the adjacent pin wheel adjusting members on the left.

The recess **11** is dimensioned so as to permit the maximum required swing movement of the adjusting discs **8**.

Mounted on the left hand ends of the shaft **14**, **15**, **16**, are bevel wheels **17**, **18**, **19** cooperating with further bevel wheels **20**, **21**, **22**, which in turn, through toothed wheels **23**, **24**, **25**, and toothed wheels **26**, **27**, **28**, transmit the driving motion upon the type wheels **29**, **30**, **31**, so that the type wheels partake in the adjustment of the adjusting discs **10**. Further, discs **32** are mounted on the shaft **2** beside the pin wheels, or between the pin wheels, respectively. Each of these discs is provided with a recess **33** adjacent to a cam **34** which is sloping down at **35** to the normal diameter of the discs **32**. The discs **32** cooperate with star-shaped wheels **36** which are shifted by the individual discs **38** connected with the totalizer wheel **37**, in the tens-transfer position, in such a manner that one of their teeth comes within the reach of the cam **34** to be shifted by this cam. The shift motion of the star wheels **36** is transmitted upon the next following totalizer wheel.

In the known machines of the type referred to the star wheels **36** are driven by means of shafts which are separately mounted in the frame and separately driven.

Secured on the right hand side of the set of pin wheels is a cam wheel **39** having cams **40**,

41, 42, the number of which corresponds to the number of pin wheels. The cams cooperate with a lever 44 secured on shaft 43 which is formed with a flat face at 45 and is so arranged with respect to toothed wheels 46 mounted on the shaft 47 of the star wheels, that the edge of the flat face 45 comes into the reach of the gaps between the teeth of the toothed wheels 46 on clockwise rotation of the shaft, thus locking these toothed wheels and the totalizer wheels 37 meshing therewith. The lock is effected under action of the cam 40 immediately after the last pin has passed its associated toothed wheel 46. The cam 41 comes into action immediately after completion of the tens-transfer from the unit position to the decimal position and the cam 42 comes into action immediately after completion of the tens-transfer from the decimal position to the hundreds place. Where more places are provided in the shifting mechanism, the number of cams is correspondingly augmented.

In order to prevent inadvertent readjustment of the type wheels 29, 30, 31, during rotation of the drum 3, and to align the type wheels with respect to each other, a locking lever 48 is provided to engage the toothed wheels 26, 27, 28, after completion of the adjustment of the type wheels. The locking lever is supported on the pin 49 and by means of its free end 50 engages into a recess of the slide 51 which is slidably but non-rotatably mounted on the journal 4 of the stamping cylinder. The end of the slide is formed with a knob 52 and a nose 53 which engages only into a slot 54 of the journal 4 as long as it is in the extreme left position. On the other hand, the nose engages additionally into a slot 55 of the journal bearing when the slide with its nose is shifted to the right. By the right hand shifting, the locking lever 48 disengages the toothed wheels 26, 27, 28. The locking lever 48 is acted upon by a spring 56 which passes through its dead center position as the pawl 48 is swung from one extreme position into the opposite extreme position and thus secures the pawl in its respective extreme position.

The apparatus of the present invention has been described in detail with reference to specific embodiments. It is to be understood, however, that the invention is not limited by such specific reference but is broader in scope and capable of other embodiments than those specifically described and illustrated in the drawing.

WILHELM FRIEDRICHS.

PUBLISHED

MAY 25, 1943.

BY A. P. C.

W. FRIEDRICHS

STAMPING MACHINE

Filed May 18, 1940

Serial No.

336,047

2 Sheets-Sheet 1

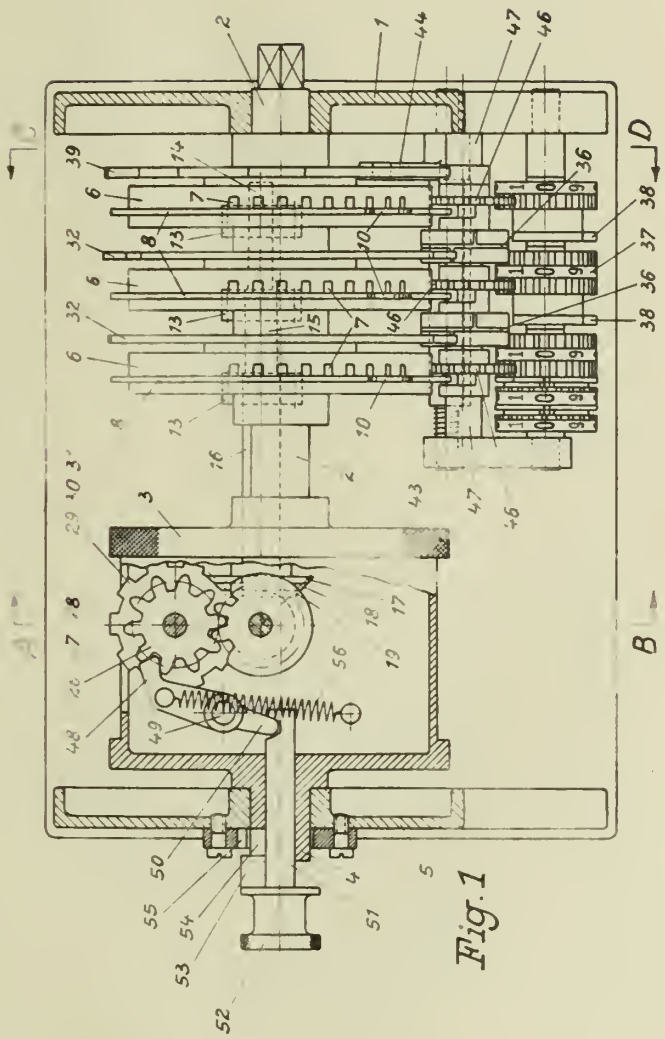

Fig. 1

Inventor:
W Friedrichs

By: Glascock Downing & Seebold
Attys.

PUBLISHED

MAY 25, 1943.

BY A. P. C.

W. FRIEDRICHS

STAMPING MACHINE

Filed May 18, 1940

Serial No.

336,047

2 Sheets-Sheet 2

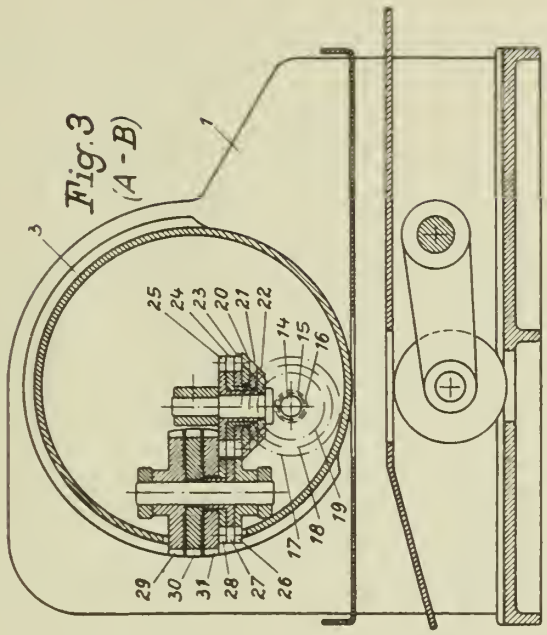

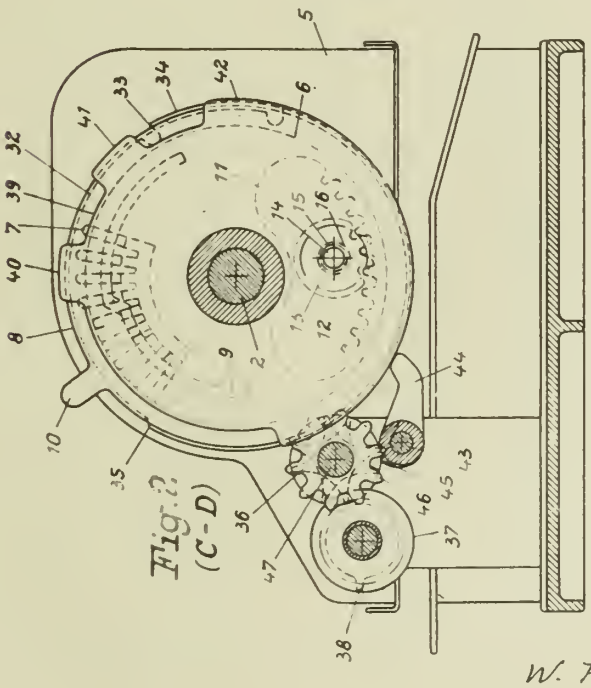

Inventor:
W. Friedrichs

By Glascock Downing & Seebold
Attys.

Published May 25, 1943

Serial No. 337,038

ALIEN PROPERTY CUSTODIAN

JOINING PAPER REELS

Paul Dietrich, Augsburg, Germany; vested in the Alien Property Custodian

Application filed May 24, 1940

This invention relates to a device for joining paper reels by sticking a new reel to a running-down web, the new reel, disposed in a rotary frame, being brought up to the speed of the running-down web and, by turning the frame, into a position at which the sticking operation is performed. This is done by means of a pressure applying brush at the end of a lever actuated by a piston or pistons which are moved by pneumatic or hydraulic pressure controlled by an electromagnetically operated piston slide-valve or a valve system.

The present invention constitutes an improvement of a device of the type outlined above and takes into consideration that when the running-down reel is swung out of operating and into sticking position for the new reel the brush must be moved out of the range of the running-down reel and later on brought again as closely as possible to the running-down web. This is necessary, since in view of a web speed of approximately 6–8 m. per second exact operation of the sticking means is insured only by rapid action. As the release of the sticking operation depends upon the position of the joining point on the new reel, even tenths of a second will matter and the brush must therefore be in direct contact with the running-down web prior to sticking. Such an arrangement is suitable also because it reduces fluttering of the running web and thereby insures sticking.

In a known construction of this class the cylinder for actuating the lever for the brush is fixed to the machine frame. To bring about the to and fro motion of the brush preceding the sticking operation the shaft for the lever is moved separately with the result that the piston, particularly during application of the brush to the running-down web, is displaced to such an extent that an empty space is produced on one side of the piston and had to be filled with air or liquid during the subsequent actuation of the sticking means. Experiments have shown, however, that this involves a loss of time great enough to prevent operation of the sticking means at the requisite speed.

According to the present invention, these drawbacks are eliminated by mounting the cylinder on an arm that is movable about the shaft for the lever supporting the brush. At the actuation of this arm, the motion thereof will be transmitted through the piston, piston rod and lever to the shaft for the latter and the brush applied to the web without relative displacement of the piston and cylinder and without the formation of a dead space.

In a particularly simple constructional embodiment of the invention only a single cylinder having a piston working against spring action is used. The movable arm on which the cylinder is mounted may be actuated at will, preferably by means of a pawl-operated handwheel and eccentric.

The invention is illustrated by way of example in the accompanying drawing, in which

Figures 1 to 6 show a device of the known type and

Figs. 7 and 8 are, respectively, a front and side view, partly in section, of the features of the invention.

The three-reel-star 2 rests rotatably in bearings of the floor stand 1. It carries the running-down reel 3 with the running-down web 4 and the new reel 5 which is to be stuck to the running-down web 4. After applying the adhesive, sticking is effected by the brush 6 at the end of the lever 7. This lever 7 will be moved by torsional springs 8 on a shaft 9, which by means of pistons 11 or 11′ acting on levers 10 or 10′ may be twisted either way. The pistons 11 or 11′ are actuated by compressed air which after release by a piston valve or a valve system 13 enters into the one or the other line of piping. Control is effected by either the magnet 14 or 14′. The air is supplied through a pressure reducing valve 16 and a piping 15. Pressure in the valve 16 may be adjusted at will. The speed at which the lever 7 and together therewith the brush 6 is swung into operating position may be regulated at will by means of a throttling valve or valves in the air pipes. On the lever 7 a magnet 17 also is placed which actuates the knife 18 for severing the running-down web.

Together with the paper reels a cam 30 rotates which operates directly together with a counter cam 31 (see Figs. 2 and 3). The cam 31 is supported in three places by springs 32 and is provided with silver contacts 33 in two places which operate together with corresponding counter contacts also elastically supported by springs 35.

The electric circuit according to Figs. 1 to 6 may for instance operate as follows:

While the old reel runs down, that is before the reel star is put in position where sticking may take place, the connection prepared between contact S2 and the electromagnetic control valve S4 is interrupted by a push button, not shown. There is now no connection between the contact

S2 and the lifting magnet S5 which operates the severing knife 18.

As soon as the push button is pressed and the cam 30 on the paper reel cone closes the contact S2, the electromagnetic control valve S4 is energized and opens the compressed air pipe and the way to the piston 11'. This causes the lever 7 with the brush 6 to swing towards the web of the running-down reel which will thereby be stuck onto the new reel. Simultaneously, the end switch S1 breaks the connection between the contacts S2 and the electromagnetic control valve S4 and prepares a connection between the contact S2 and the electromagnetic control valve S3, and also between the contact S2 and the electric lifting magnet S5, which latter connection is, however, still interrupted by the contact S2.

On the next revolution of the cam 30 on the reel cone the contact S2 will be closed again. Now the electromagnetic control valve S3 as well as the electric lifting magnet S5 will be energized. Between S2 and S3, and also between S2 and S5, a time relay is interposed. The effect of it is that first the lifting magnet S5 will actuate the knife which severs the running-down web and only then the electromagnetic control valve S3 will open the compressed air piping leading to the piston 11 which moves the lever 7 back again to rest.

The return swing of the lever 7 operates the end switch S1, and the connection between S2 and S3 as well as that between S2 and S5 is thereby broken. Simultaneously, the previous connection between S2 and S4 is prepared so that conditions for another sticking operation are restored again.

Fig. 1 shows, moreover, that the reel shafts are provided with brake bands 40 which at 41 are fastened and at 42 attached to a two-armed lever 43. A spring 44 holds the two-armed lever 43 with sufficient force against a stop 45 to balance the brake effect. A roller 46 at the one end of the two-armed lever 43 is within reach of the circularly curved lever 47 when the reel is in the normal running-down position, without any special braking effect taking place, since the paper reel in this position is under the influence of the band pendulum 60. In the no-load position, however, as in the case of reel 3 a brake effect may be caused by the lever 47, since the oscillating roller 48 is influenced by the tension of the web. If the tension relaxes the oscillating roller will sink a little, whereby through an intermediate two-armed lever 50 in bearings 49 a rod 51 is moved downward. This motion is transmitted to the rod 54 by means of the two-armed lever 53 in bearings 52, whereby the two-armed lever 56 in bearings 55 is caused to swing counter-clockwise. By the motion of the lever 53 as well as that of the lever 56 the curved lever 47 will be moved towards the middle shaft of the floor stand 1. The roller 46 will thereby be swung about the fast center of motion 57 and the brake band will be tightened. The reversed motion occurs when the tension of the web increases and the oscillating roller 48 is thereby raised. A counterweight 58 serves to balance the lever.

The band pendulum is influenced by the paper reel as well as the roller of the printing mechanism. An oscillating roller 48 (Fig. 6) is influenced by the tension of the web 4 and adjusts by means of a toothed wheel 63, a rack 64 and a lever 65 a mercury tilting switch 67, the lever 65 oscillating about the center of motion supposed at the time to be at rest. It drives an electromotor 62 (Fig. 4) which adjusts the rack 68 (Fig. 6) whereby a gear without steps is adjusted which regulates uniformity of motion of the band pendulum 60 and the roller until the tension of the web is compensated again. To prevent excessive regulation the rack 68 like the stop 66 will be adjusted in the sense that the lever 65 will swing about the point 70 as the now supposed fast center of motion, so that the mercury tilting switch 67 will break the circuit driving the motor before the oscillating roller 48 may get into normal position. In this manner intermittent adjustment is attained which prevents oscillations.

Between the printing machine roller and the paper reel a free wheel 71 (Figs. 4 and 5) is interposed which is constructed as follows: The rollers 72 will be pressed into the wedge-shaped spaces between the outer wheel 73 and the inner wheel 74 as long as the drive of the paper reel, which normally overruns a little the speed of the printing machine rollers, is effective. As soon, however, as the running-down reel 3 is rocked out of reach of the band pendulum 60 (Fig. 1), this drive fails as the paper reel 5 which is now situated under the band pendulum 60 is still at rest. The rollers 72 will be held back by the outer wheel 73, so that the wheel 74 which is coupled to the printing machine roller may freely rotate. The wheels 74 and 73 are connected only by a slip coupling 75. This causes the presently resting paper reel 5 to attain slowly the speed of the running-down reel 3, whereupon the sticking operation may be started anew in the manner described.

Referring to Figs. 7 and 8, the invention resides in the following: The brush 6 is arranged on a lever 7 connected with the shaft 9 which through the lever 10 keyed thereto is moved by the piston 11 against the action of the spring 104. According to the invention, the cylinder 100 is mounted on an arm 101 loosely rockable about the shaft 9 and moved by a lever 102 eccentrically connected with a handwheel 103 controllable by a pawl. By turning the handwheel 103 the arm 101 and thereby the shaft 9 are adjusted without causing any variation in the position of the piston 11 in the cylinder 100.

PAUL DIETRICH.

PUBLISHED
MAY 25, 1943.
BY A. P. C.

P. DIETRICH
JOINING PAPER REELS
Filed May 24, 1940

Serial No.
337,038
3 Sheets-Sheet 1

Fig. 1

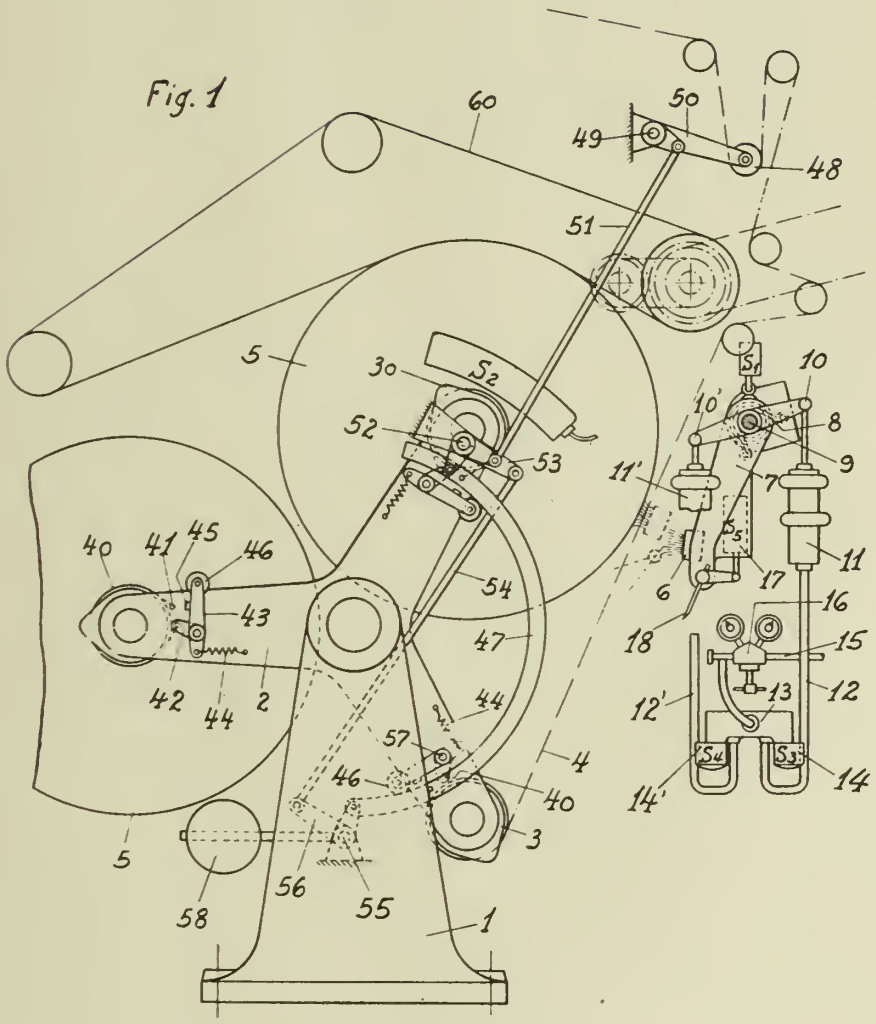

Inventor
Paul Dietrich

By Marechal & Nor
attorneys

PUBLISHED
MAY 25, 1943.
BY A. P. C.

P. DIETRICH
JOINING PAPER REELS
Filed May 24, 1940

Serial No.
337,038
3 Sheets-Sheet 2

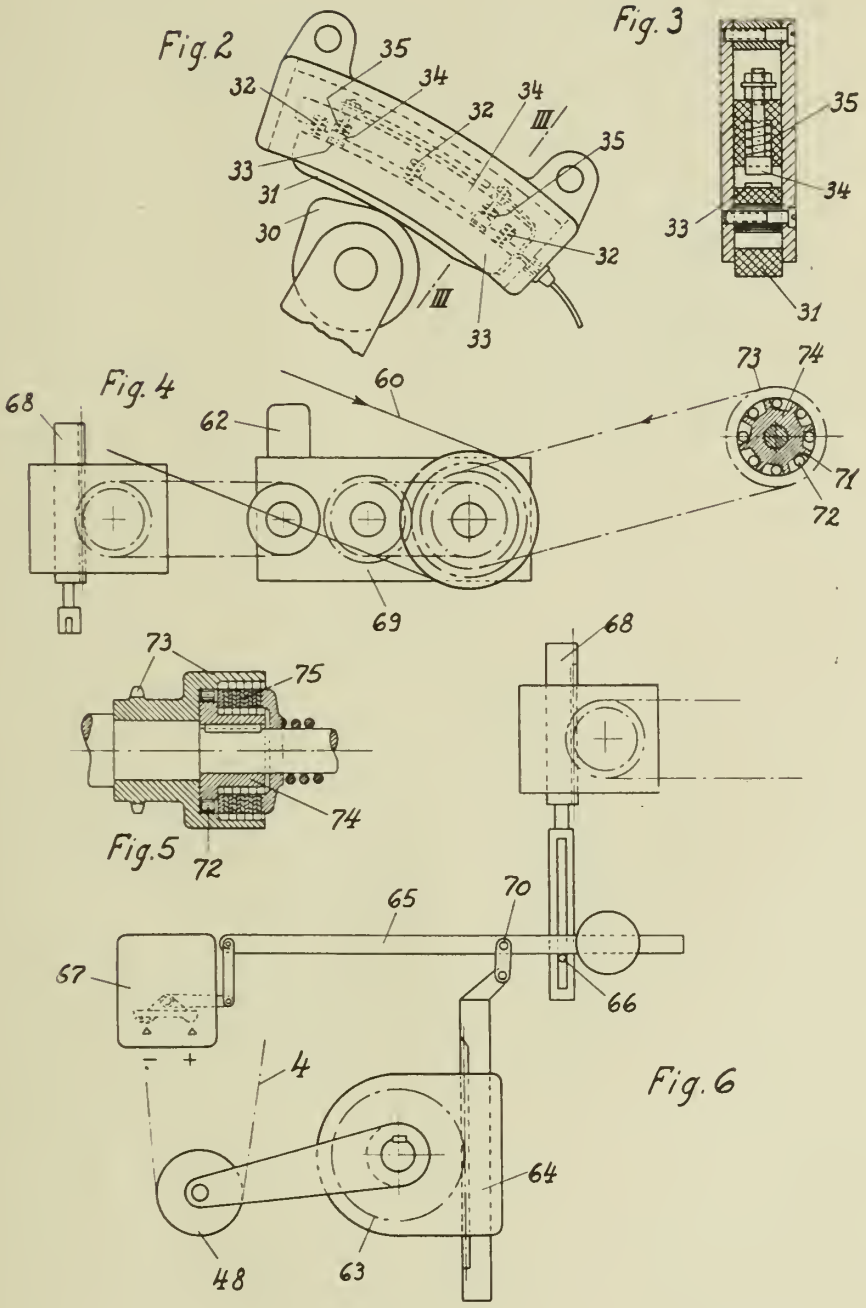

Inventor
Paul Dietrich
By Marechal & Noe
attorneys

PUBLISHED
MAY 25, 1943.
BY A. P. C.

P. DIETRICH
JOINING PAPER REELS
Filed May 24, 1940

Serial No.
337,038
3 Sheets-Sheet 3

Fig. 7

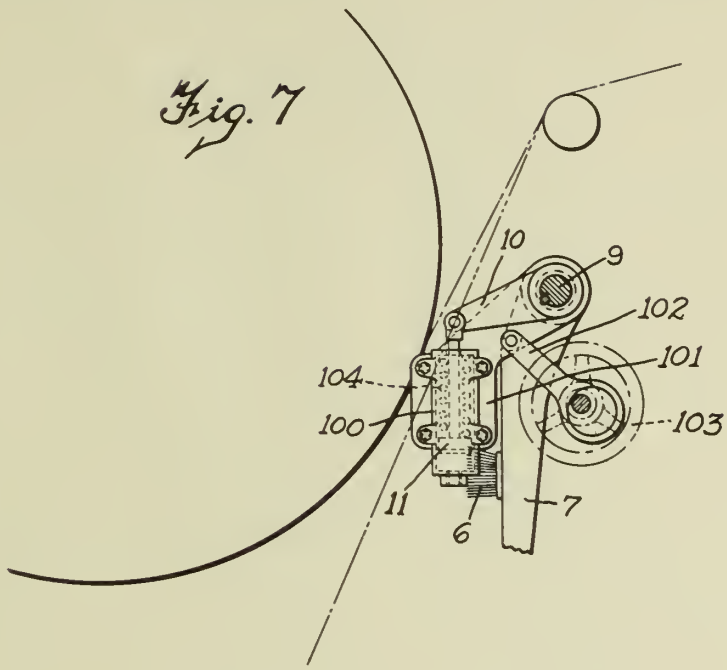

Fig. 8

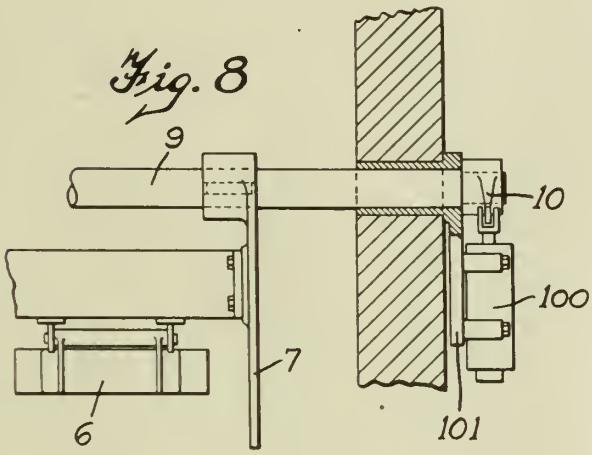

Inventor
Paul Dietrich
By Marechal & Noi
Attorneys

Published May 25, 1943

Serial No. 337,848

ALIEN PROPERTY CUSTODIAN

AIR TRANSFER ARRANGEMENTS

Franz Villinger, Dessau, Germany; vested in the Alien Property Custodian

Application filed May 29, 1940

This invention relates to improvements in air transfer arrangements for exhausting air from one portion of the skin layer adjacent a wing or fuselage and discharging it into another portion of the skin layer in order to effectively increase the lifting capacity of the airplane. I am aware that it is, broadly speaking, old to provide an arrangement including an air pumping mechanism and the necessary piping and ducts to accomplish this purpose, but the various parts in such arrangements have usually been spread throughout various portions of an airplane—either the wings, or the fuselage, or both. This has resulted not only in reducing the pay-load capacity, rendering loading more difficult, and necessitating the use of relatively long air piping and ducts having a number of bends therein so that extra large and heavy pumping mechanisms have been needed to obtain the desired increase in lifting capacity, but it has also necessitated very great care in distributing the pay-load so as not to disturb the balance of the airplane, because the transverse gravity axis of an airplane must extend across it along an imaginary line located one-third of the axial length of the wings from the front thereof and disposed at right angles to the longitudinal axis of the airplane.

It is an object of this invention to provide such an air transfer arrangement in an airplane wherein the entire arrangement is located in the back of each wing behind the rear main spar and is distributed across the major portion of the wing. In this manner provision is made for easy loading, and the pay-load space is provided substantially equally on both sides of the transverse gravity axis of the plane, so that however the load is distributed the gravity axis cannot be to any great extent disturbed. Moreover the pay load is then also carried in the strongest portion of the wing.

Another object of the invention is to provide such an air transfer arrangement which is located adjacent the portion of the skin layer it is most desirable to influence, thereby reducing the length of the piping and ducts to a minimum. Moreover the ducts to and from the air pumping mechanism may either be formed by an enclosed rear portion of the wing itself, or consist of suitable ducts carried therein.

Yet another object of the invention is to provide such an air transfer arrangement wherein the ducts extending transversely of the rear portion of a wing are provided with inlets and outlets respectively and are connected through suitable air pumping mechanism of the direct propeller or fan type so that a direct and efficient airflow results substantially in a straight line from the inlets to the outlets.

Having thus briefly stated some of the salient features of my invention and some of the advantages gained thereby, I will now proceed to describe two preferred embodiments thereof more fully with the aid of the accompanying drawings, in which:

Figure 1 illustrates a plan view of an airplane with a portion of the top of one of the wings broken away.

Figure 2 is an enlarged section on the line II—II of Figure 1.

Figure 3 is a similar sectional view showing a modification of both the wing and the air transfer arrangement.

Referring to Figures 1 and 2, 1 designates a main wing having a rear main spar 3 extending transversely thereof from the wing tip to the fuselage, and B denotes a wing zone extending between the rear spar 3 and the rear wing flap 2, within which zone it is most desirable to influence the skin layer of air by exhausting air from portions thereof and discharging this air into other portions thereof. Within the rear portion of the wing 1, and within the zone B, an air pumping mechanism 4 is provided, which is preferably of the propeller or fan type so that air is drawn therethrough and discharged therefrom substantially in a straight line. This air pumping mechanism 4 is suitably driven as by a shaft 4*a* extending rearwardly from a propeller motor 4*b*. The air pumping mechanism 4 has its axis 10 arranged parallel to, and substantially in alignment with the axes of, two aligned ducts, an intake duct 5 and a discharge duct 6, between which it is located. Opening into the duct 5 through the rear of the wing 1 are inlet passages 7, and opening into the duct 6 also through the rear of the said wing are outlet passages 7*a*. The passages 7 and 7*a* are so located that they are closed by the flap 2 when the latter is raised, and open when the flap is downwardly and rearwardly inclined. In this instance the ducts 5 and 6 are separate from, and mounted within, the rear portion of the wing 1.

Thus air drawn from the skin layer through the inlet passages 7 flows through the duct 5 to the pumping mechanism 4 by which it is discharged through the duct 6 and out through the outlet passages 7*a*, so that the air flows substantially directly in the direction of the arrow 11 from the inlets 7 to the outlets 7*a* without any abrupt change of direction.

In the modification shown in Figure 3 the ducts are formed by, and between the upper and lower walls 8 of the wing and rearwardly of a partition wall 9 supported by the rear main spar 3. In this instance two air pumping mechanisms 4 are indicated having their axes parallel with the axes of the ducts.

FRANZ VILLINGER.

PUBLISHED

MAY 25, 1943.

BY A. P. C.

F. VILLINGER

AIR TRANSFER ARRANGEMENTS

Filed May 29, 1940

Serial No.
337,848

Fig.1

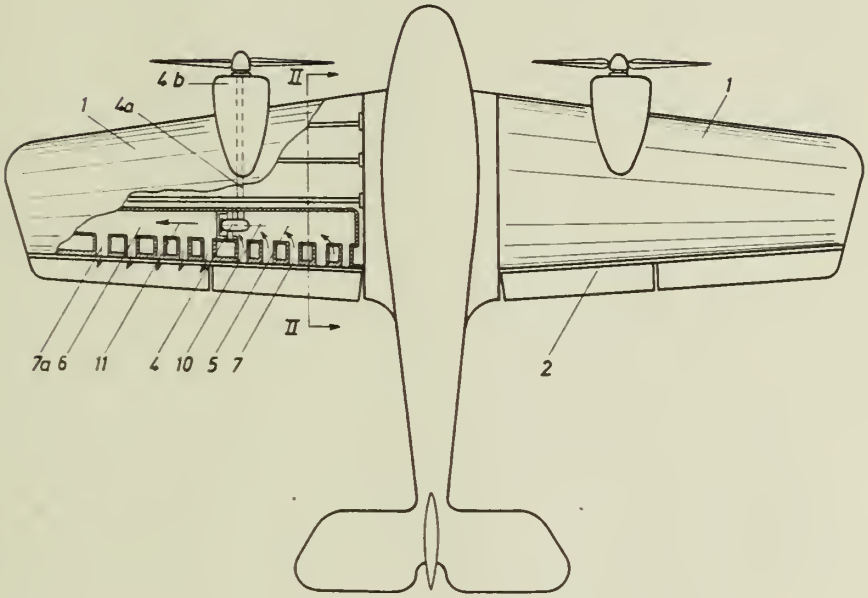

Fig.2

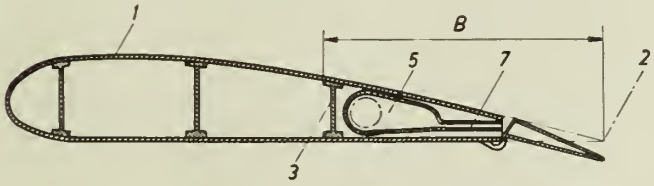

Fig.3

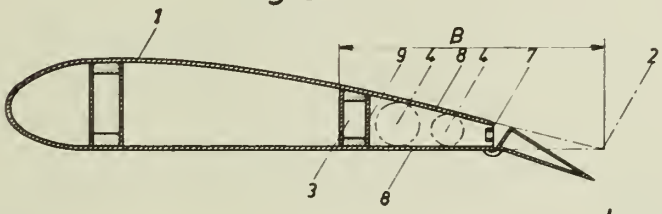

Inventor:
Franz Villinger

By Gerald S. Baldwin
his Attorney